press has been used to reproduce the document. If only technical accessibility were required "logic would require the inclusion within the term [printed] of all unprinted public documents for they are all 'accessible.' While some tribunals have gone quite far in that direction, as in the 'college thesis cases' I feel they have done so unjustifiably and on the wrong theory. Knowledge is not in the possession *of the public* where there has been no dissemination, as distinguished from technical accessibility..." The real significance of the word "printed" is grounded in the "*probability* of wide circulation."). See also *Deep Welding, Inc. v. Sciaky Bros.*, 417 F.2d 1227, 163 USPQ 144 (7th Cir. 1969) (calling the holding of *Ex parte Hershberger* "extreme"). Compare *In re Bayer,* 568 F.2d 1357, 196 USPQ 670 (CCPA 1978) (A reference will constitute a "printed publication" as long as a presumption is raised that the portion of the public concerned with the art would know of the invention even if accessibility is restricted to only this part of the public. But accessibility to applicant's thesis was restricted to only three members of a graduate committee. There can be no presumption that those concerned with the art would have known of the invention in this case.).

ORALLY PRESENTED PAPER CAN CONSTITUTE A "PRINTED PUBLICATION" IF WRITTEN COPIES ARE AVAILABLE WITHOUT RESTRICTION

A paper which is orally presented in a forum open to all interested persons constitutes a "printed publication" if written copies are disseminated without restriction. *Massachusetts Institute of Technology v. AB Fortia,* 774 F.2d 1104, 1109, 227 USPQ 428, 432 (Fed. Cir. 1985) (Paper orally presented to between 50 and 500 persons at a scientific meeting open to all persons interested in the subject matter, with written copies distributed without restriction to all who requested, is a printed publication. Six persons requested and obtained copies.).

INTERNAL DOCUMENTS INTENDED TO BE CONFIDENTIAL ARE NOT "PRINTED PUBLICATIONS"

Documents and items only distributed internally within an organization which are intended to remain confidential are not "printed publications" no matter how many copies are distributed. *In re George,* 2 USPQ2d 1880 (Bd. Pat. App. & Inter. 1987) (Research reports disseminated in-house to only those persons who understood the policy of confidentiality regarding such reports are not printed publications even though the policy was not specifically stated in writing.); *Garret Corp. v. United States,* 422 F.2d 874, 878, 164 USPQ 521, 524 (Ct. Cl.1970) ("While distribution to government agencies and personnel alone may not constitute publication ... distribution to commercial companies without restriction on use clearly does."); *Northern Telecom Inc. v. Datapoint Corp.*, 908 F.2d 931, 15 USPQ2d 1321 (Fed. Cir. 1990) (Four reports on the AESOP-B military computer system which were not under security classification were distributed to about fifty organizations involved in the AESOP-B project. One document contained the legend "Reproduction or further dissemination is not authorized." The other documents were of the class that would contain this legend. The documents were housed in Mitre Corporation's library. Access to this library was restricted to those involved in the AESOP-B project. The court held that public access was insufficient to make the documents "printed publications.").

2128.02 Date Publication Is Available as a Reference

DATE OF ACCESSIBILITY CAN BE SHOWN THROUGH EVIDENCE OF ROUTINE BUSINESS PRACTICES

Evidence showing routine business practices can be used to establish the date on which a publication became accessible to the public. Specific evidence showing when the specific document actually became available is not always necessary. *Constant v. Advanced Micro-Devices, Inc.*, 848 F.2d 1560, 7 USPQ2d 1057 (Fed. Cir.), *cert. denied,* 988 U.S. 892 (1988) (Court held that evidence submitted by Intel regarding undated specification sheets showing how the company usually treated such specification sheets was enough to show that the sheets were accessible by the public before the critical date.); *In re Hall,* 781 F.2d 897, 228 USPQ 453 (Fed. Cir. 1986) (Librarian's affidavit establishing normal time frame and practice for indexing, cataloging and shelving doctoral theses established that the thesis in

question would have been accessible by the public before the critical date.).

A JOURNAL ARTICLE OR OTHER PUBLICATION BECOMES AVAILABLE AS PRIOR ART ON DATE OF IT IS RECEIVED BY A MEMBER OF THE PUBLIC

A publication disseminated by mail is not prior art until it is received by at least one member of the public. Thus, a magazine or technical journal is effective as of its date of publication (date when first person receives it) not the date it was mailed or sent to the publisher. *In re Schlittler*, 234 F.2d 882, 110 USPQ 304 (CCPA 1956).

2129 Admissions as Prior Art

ADMISSIONS BY APPLICANT CONSTITUTE PRIOR ART

When applicant states that something is prior art, it is taken as being available as prior art against the claims. Admitted prior art can be used in obviousness rejections. *In re Nomiya*, 509 F.2d 566, 184 USPQ 607, 610 (CCPA 1975) (Figures in the application labeled "prior art" held to be an admission that what was pictured was prior art relative to applicant's invention.).

A JEPSON CLAIM RESULTS IN AN IMPLIED ADMISSION THAT PREAMBLE IS PRIOR ART

The preamble elements in a Jepson-type claim (i.e., a claim of the type discussed in 37 CFR 1.75(e); see MPEP § 608.01(m)) "are impliedly admitted to be old in the art, ... but it is only an implied admission." *In re Ehrreich,* 590 F.2d 902, 909-910 200 USPQ 504, 510 (CCPA 1979) (emphasis in original) (citations omitted). See also *Sjolund v. Musland*, 847 F.2d 1573, 1577, 6 USPQ2d 2020, 2023 (Fed. Cir. 1988); *Pentec, Inc. v. Graphic Controls Corp.*, 776 F.2d 309, 315, 227 USPQ 766, 770 (Fed. Cir. 1985); and *Reading & Bates Construction Co. v. Baker Energy Resources Corp.*, 748 F.2d 645, 650, 223 USPQ 1168, 1172 (Fed. Cir. 1984). Claims must be read in light of the specification. Where the specification confirms that the subject matter of the preamble was invented by another before applicant's invention, the preamble is treated as prior art. However, certain art may be prior art to one inventive entity, but not to the public in general. *In re Fout,* 675 F.2d 297, 300-301, 213 USPQ 532, 535-36 (CCPA 1982). This is the case when applicant has made an improvement on his or her own prior invention. An applicant's own foundational work should not, unless there is a statutory bar, be treated as prior art solely because knowledge of this work is admitted. Therefore, when applicant explains that the *Jepson* format is being used to avoid a double patenting rejection over the applicant's own copending application, the implication that the preamble is admitted prior art is overcome. *Reading & Bates Construction Co. v. Baker Energy Resources Corp.*, 748 F.2d 645, 650, 223 USPQ 1168, 1172 (Fed. Cir. 1984). Compare *In re Fout*, 675 F.2d 297, 300-01, 213 USPQ 532, 535-36 (CCPA 1982) (The court held that the preamble was admitted prior art because the specification explained that Paglaro, a different inventor, had invented the subject matter described in the preamble.).

2131 Anticipation - Application of 35 U.S.C. 102(a), (b), and (e)

35 U.S.C. 102. Conditions for patentability; novelty and loss of right to patent.

A person shall be entitled to a patent unless -

(a) the invention was known or used by others in this country, or patented or described in a printed publication in this or a foreign country, before the invention thereof by the applicant for a patent, or

(b) the invention was patented or described in a printed publication in this or a foreign country or in public use or on sale in this country, more than one year prior to the date of application for patent in the United States, or

(c) he has abandoned the invention, or

(d) the invention was first patented or caused to be patented, or was the subject of an inventor's certificate, by the applicant or his legal representatives or assigns in a foreign country prior to the date of the application for patent in this country on an application for patent or inventor's certificate filed more than twelve months before the filing of the application in the United States, or

(e) the invention was described in—

(1) an application for patent, published under section 122(b), by another filed in the United States before the invention by the applicant for patent, except that an international application filed under the treaty defined in section 351(a) shall have the effect under this subsection of a national application published under section 122(b) only if the international application designating the United States was published under Article 21(2)(a) of such treaty in the English language; or

(2) a patent granted on an application for patent by another filed in the United States before the invention by the applicant for patent, except that a patent shall not be deemed filed

in the United States for the purposes of this subsection based on the filing of an international application filed under the treaty defined in section 351(a); or

(f) he did not himself invent the subject matter sought to be patented, or

(g)(1)during the course of an interference conducted under section 135 or section 291, another inventor involved therein establishes, to the extent permitted in section 104, that before such person's invention thereof the invention was made by such other inventor and not abandoned, suppressed, or concealed, or (2) before such person's invention thereof, the invention was made in this country by another inventor who had not abandoned, suppressed, or concealed it. In determining priority of invention under this subsection, there shall be considered not only the respective dates of conception and reduction to practice of the invention, but also the reasonable diligence of one who was first to conceive and last to reduce to practice, from a time prior to conception by the other.

TO ANTICIPATE A CLAIM, THE REFERENCE MUST TEACH EVERY ELEMENT OF THE CLAIM

"A claim is anticipated only if each and every element as set forth in the claim is found, either expressly or inherently described, in a single prior art reference." *Verdegaal Bros. v. Union Oil Co. of California*, 814 F.2d 628, 631, 2 USPQ2d 1051, 1053 (Fed. Cir. 1987). "The identical invention must be shown in as complete detail as is contained in the ... claim." *Richardson v. Suzuki Motor Co.*, 868 F.2d 1226, 1236, 9 USPQ2d 1913, 1920 (Fed. Cir. 1989). The elements must be arranged as required by the claim, but this is not an *ipsissimis verbis* test, i.e., identity of terminology is not required. *In re Bond*, 910 F.2d 831, 15 USPQ2d 1566 (Fed. Cir. 1990). Note that, in some circumstances, it is permissible to use multiple references in a 35 U.S.C. 102 rejection. See MPEP § 2131.01.

2131.01 Multiple Reference 35 U.S.C. 102 Rejections

Normally, only one reference should be used in making a rejection under 35 U.S.C. 102. However, a 35 U.S.C. 102 rejection over multiple references has been held to be proper when the extra references are cited to:

(A) Prove the primary reference contains an "enabled disclosure;"

(B) Explain the meaning of a term used in the primary reference; or

(C) Show that a characteristic not disclosed in the reference is inherent.

See paragraphs I-III below for more explanation of each circumstance.

I. TO PROVE REFERENCE CONTAINS AN "ENABLED DISCLOSURE"

Extra References and Extrinsic Evidence Can Be Used To Show the Primary Reference Contains an "Enabled Disclosure"

When the claimed composition or machine is disclosed identically by the reference, an additional reference may be relied on to show that the primary reference has an "enabled disclosure." *In re Samour*, 571 F.2d 559, 197 USPQ 1 (CCPA 1978) and *In re Donohue*, 766 F.2d 531, 226 USPQ 619 (Fed. Cir. 1985) (Compound claims were rejected under 35 U.S.C. 102(b) over a publication in view of two patents. The publication disclosed the claimed compound structure while the patents taught methods of making compounds of that general class. The applicant argued that there was no motivation to combine the references because no utility was previously known for the compound and that the 35 U.S.C. 102 rejection over multiple references was improper. The court held that the publication taught all the elements of the claim and thus motivation to combine was not required. The patents were only submitted as evidence of what was in the public's possession before applicant's invention.).

II. TO EXPLAIN THE MEANING OF A TERM USED IN THE PRIMARY REFERENCE

Extra References or Other Evidence Can Be Used to Show Meaning of a Term Used in the Primary Reference

Extrinsic evidence may be used to explain but not expand the meaning of terms and phrases used in the reference relied upon as anticipatory of the claimed subject matter. *In re Baxter Travenol Labs.*, 952 F.2d 388, 21 USPQ2d 1281 (Fed. Cir. 1991) (Baxter Travenol Labs. invention was directed to a blood bag system incorporating a bag containing DEHP, an additive to the plastic which improved the bag's red blood cell storage capability. The examiner rejected the claims

over a technical progress report by Becker which taught the same blood bag system but did not expressly disclose the presence of DEHP. The report, however, did disclose using commercial blood bags. It also disclosed the blood bag system as "very similar to [Baxter] Travenol's commercial two bag blood container." Extrinsic evidence (depositions, declarations and Baxter Travenol's own admissions) showed that commercial blood bags, at the time Becker's report was written, contained DEHP. Therefore, one of ordinary skill in the art would have known that "commercial blood bags" meant bags containing DEHP. The claims were thus held to be anticipated.).

III. TO SHOW THAT A CHARACTERISTIC NOT DISCLOSED IN THE REFERENCE IS INHERENT

Extra Reference or Evidence Can Be Used To Show an Inherent Characteristic of the Thing Taught by the Primary Reference

"To serve as an anticipation when the reference is silent about the asserted inherent characteristic, such gap in the reference may be filled with recourse to extrinsic evidence. Such evidence must make clear that the missing descriptive matter is necessarily present in the thing described in the reference, and that it would be so recognized by persons of ordinary skill." *Continental Can Co. USA v. Monsanto Co.*, 948 F.2d 1264, 1268, 20 USPQ2d 1746, 1749 (Fed. Cir. 1991) (The court went on to explain that "this modest flexibility in the rule that 'anticipation' requires that every element of the claims appear in a single reference accommodates situations in which the common knowledge of technologists is not recorded in the reference; that is, where technological facts are known to those in the field of the invention, albeit not known to judges." 948 F.2d at 1268, 20 USPQ at 1749-50.). Note that as long as there is evidence of record establishing inherency, failure of those skilled in the art to contemporaneously recognize an inherent property, function or ingredient of a prior art reference does not preclude a finding of anticipation. *Atlas Powder Co. v. IRECO, Inc.*, 190 F.3d 1342, 1349, 51 USPQ2d 1943, 1948 (Fed. Cir. 1999) (Two prior art references disclosed blasting compositions containing water-in-oil emulsions with identical ingredients to those claimed, in overlapping ranges with the claimed composition. The only element of the claims arguably not present in the prior art compositions was "sufficient aeration . . . entrapped to enhance sensitivity to a substantial degree." The Federal Circuit found that the emulsions described in both references would inevitably and inherently have "sufficient aeration" to sensitize the compound in the claimed ranges based on the evidence of record (including test data and expert testimony). This finding of inherency was not defeated by the fact that one of the references taught away from air entrapment or purposeful aeration.). See also *In re King*, 801 F.2d 1324, 1327, 231 USPQ 136, 139 (Fed. Cir. 1986); *Titanium Metals Corp. v. Banner*, 778 F.2d 775, 782, 227 USPQ 773, 778 (Fed. Cir. 1985). See MPEP § 2112 - § 2112.02 for case law on inherency. Also note that the critical date of extrinsic evidence showing a universal fact need not antedate the filing date. See MPEP § 2124.

2131.02 Genus-Species Situations

A SPECIES WILL ANTICIPATE A CLAIM TO A GENUS

"A generic claim cannot be allowed to an applicant if the prior art discloses a species falling within the claimed genus." The species in that case will anticipate the genus. *In re Slayter*, 276 F.2d 408, 411, 125 USPQ 345, 347 (CCPA 1960); *In re Gosteli*, 872 F.2d 1008, 10 USPQ2d 1614 (Fed. Cir. 1989) (Gosteli claimed a genus of 21 specific chemical species of bicyclic thia-aza compounds in Markush claims. The prior art reference applied against the claims disclosed two of the chemical species. The parties agreed that the prior art species would anticipate the claims unless applicant was entitled to his foreign priority date.).

A REFERENCE THAT CLEARLY NAMES THE CLAIMED SPECIES ANTICIPATES THE CLAIM NO MATTER HOW MANY OTHER SPECIES ARE NAMED

A genus does not always anticipate a claim to a species within the genus. However, when the species is clearly named, the species claim is anticipated no matter how many other species are additionally named. *Ex parte A*, 17 USPQ2d 1716 (Bd. Pat. App. & Inter. 1990) (The claimed compound was named in

a reference which also disclosed 45 other compounds. The Board held that the comprehensiveness of the listing did not negate the fact that the compound claimed was specifically taught. The Board compared the facts to the situation in which the compound was found in the *Merck Index*, saying that "the tenth edition of the *Merck Index* lists ten thousand compounds. In our view, each and every one of those compounds is 'described' as that term is used in 35 U.S.C. § 102(a), in that publication."). *Id.* at 1718. See also *In re Sivaramakrishnan*, 673 F.2d 1383, 213 USPQ 441 (CCPA 1982) (The claims were directed to polycarbonate containing cadmium laurate as an additive. The court upheld the Board's finding that a reference specifically naming cadmium laurate as an additive amongst a list of many suitable salts in polycarbonate resin anticipated the claims. The applicant had argued that cadmium laurate was only disclosed as representative of the salts and was expected to have the same properties as the other salts listed while, as shown in the application, cadmium laurate had unexpected properties. The court held that it did not matter that the salt was not disclosed as being preferred, the reference still anticipated the claims and because the claim was anticipated, the unexpected properties were immaterial.).

A GENERIC CHEMICAL FORMULA WILL ANTICIPATE A CLAIMED SPECIES COVERED BY THE FORMULA WHEN THE SPECIES CAN BE "AT ONCE ENVISAGED" FROM THE FORMULA

When the compound is not specifically named, but instead it is necessary to select portions of teachings within a reference and combine them, e.g., select various substituents from a list of alternatives given for placement at specific sites on a generic chemical formula to arrive at a specific composition, anticipation can only be found if the classes of substituents are sufficiently limited or well delineated. *Ex parte A*, 17 USPQ2d 1716 (Bd. Pat. App. & Inter. 1990). If one of ordinary skill in the art is able to "at once envisage" the specific compound within the generic chemical formula, the compound is anticipated. One of ordinary skill in the art must be able to draw the structural formula or write the name of each of the compounds included in the generic formula before any of the compounds can be "at once envisaged." One may look to the preferred embodiments to determine which compounds can be anticipated. *In re Petering*, 301 F.2d 676, 133 USPQ 275 (CCPA 1962).

In *In re Petering*, the prior art disclosed a generic chemical formula "wherein X, Y, Z, P, and R' represent either hydrogen or alkyl radicals, R a side chain containing an OH group." The court held that this formula, without more, could not anticipate a claim to 7-methyl-9-[d, l'-ribityl]-isoalloxazine because the generic formula encompassed a vast number and perhaps even an infinite number of compounds. However, the reference also disclosed preferred substituents for X, Y, Z, R, and R' as follows: where X, P, and R' are hydrogen, where Y and Z may be hydrogen or methyl, and where R is one of eight specific isoalloxazines. The court determined that this more limited generic class consisted of about 20 compounds. The limited number of compounds covered by the preferred formula in combination with the fact that the number of substituents was low at each site, the ring positions were limited, and there was a large unchanging structural nucleus, resulted in a finding that the reference sufficiently described "each of the various permutations here involved as fully as if he had drawn each structural formula or had written each name." The claimed compound was 1 of these 20 compounds. Therefore, the reference "described" the claimed compound and the reference anticipated the claims.

In *In re Schauman*, 572 F.2d 312, 197 USPQ 5 (CCPA 1978), claims to a specific compound were anticipated because the prior art taught a generic formula embracing a limited number of compounds closely related to each other in structure and the properties possessed by the compound class of the prior art was that disclosed for the claimed compound. The broad generic formula seemed to describe an infinite number of compounds but claim 1 was limited to a structure with only one variable substituent R. This substituent was limited to low alkyl radicals. One of ordinary skill in the art would at once envisage the subject matter within claim 1 of the reference.).

Compare *In re Meyer*, 599 F.2d 1026, 202 USPQ 175 (CCPA 1979) (A reference disclosing "alkaline chlorine or bromine solution" embraces a large number of species and cannot be said to anticipate claims to "alkali metal hypochlorite."); *Akzo N.V. v. Interna-*

tional Trade Comm'n, 808 F.2d 1471, 1 USPQ2d 1241 (Fed. Cir. 1986) (Claims to a process for making aramid fibers using a 98% solution of sulfuric acid were not anticipated by a reference which disclosed using sulfuric acid solution but which did not disclose using a 98% concentrated sulfuric acid solution.). See MPEP § 2144.08 for a discussion of obviousness in genus-species situations.

2131.03 Anticipation of Ranges

A SPECIFIC EXAMPLE IN THE PRIOR ART WHICH IS WITHIN A CLAIMED RANGE ANTICIPATES THE RANGE

"[W]hen, as by a recitation of ranges or otherwise, a claim covers several compositions, the claim is 'anticipated' if *one* of them is in the prior art." *Titanium Metals Corp. v. Banner*, 778 F.2d 775, 227 USPQ 773 (Fed. Cir. 1985) (citing *In re Petering*, 301 F.2d 676, 682, 133 USPQ 275, 280 (CCPA 1962)) (emphasis in original) (Claims to titanium (Ti) alloy with 0.6-0.9% nickel (Ni) and 0.2-0.4% molybdenum (Mo) were held anticipated by a graph in a Russian article on Ti-Mo-Ni alloys because the graph contained an actual data point corresponding to a Ti alloy containing 0.25% Mo and 0.75% Ni and this composition was within the claimed range of compositions.).

PRIOR ART WHICH TEACHES A RANGE WITHIN, OVERLAPPING, OR TOUCHING THE CLAIMED RANGE ANTICIPATES IF THE PRIOR ART RANGE DISCLOSES THE CLAIMED RANGE WITH "SUFFICIENT SPECIFICITY"

When the prior art discloses a range which touches, overlaps or is within the claimed range, but no specific examples falling within the claimed range are disclosed, a case by case determination must be made as to anticipation. In order to anticipate the claims, the claimed subject matter must be disclosed in the reference with "sufficient specificity to constitute an anticipation under the statute." What constitutes a "sufficient specificity" is fact dependent. If the claims are directed to a narrow range, the reference teaches a broad range, and there is evidence of unexpected results within the claimed narrow range, depending on the other facts of the case, it may be reasonable to conclude that the narrow range is not disclosed with "sufficient specificity" to constitute an anticipation of the claims. The unexpected results may also render the claims unobvious. The question of "sufficient specificity" is similar to that of "clearly envisaging" a species from a generic teaching. See MPEP § 2131.02. A 35 U.S.C. 102/103 combination rejection is permitted if it is unclear if the reference teaches the range with "sufficient specificity." The examiner must, in this case, provide reasons for anticipation as well as a motivational statement regarding obviousness. *Ex parte Lee* 31 USPQ2d 1105 (Bd. Pat. App. & Inter. 1993) (expanded Board). For a discussion of the obviousness of ranges see MPEP § 2144.05.

2131.04 Secondary Considerations

Evidence of secondary considerations, such as unexpected results or commercial success, is irrelevant to 35 U.S.C. 102 rejections and thus cannot overcome a rejection so based. *In re Wiggins*, 488 F.2d 538, 543, 179 USPQ 421, 425 (CCPA 1973).

2131.05 Nonanalogous Art

"Arguments that the alleged anticipatory prior art is 'nonanalogous art' or 'teaches away from the invention' or is not recognized as solving the problem solved by the claimed invention, [are] not 'germane' to a rejection under section 102." *Twin Disc, Inc. v. United States*, 231 USPQ 417, 424 (Cl. Ct. 1986) (quoting *In re Self*, 671 F.2d 1344, 213 USPQ 1, 7 (CCPA 1982)).

A reference is no less anticipatory if, after disclosing the invention, the reference then disparages it. The question whether a reference "teaches away" from the invention is inapplicable to an anticipation analysis. *Celeritas Technologies Ltd. v. Rockwell International Corp.*, 150 F.3d 1354, 1361, 47 USPQ2d 1516, 1522-23 (Fed. Cir. 1998) (The prior art was held to anticipate the claims even though it taught away from the claimed invention. "The fact that a modem with a single carrier data signal is shown to be less than optimal does not vitiate the fact that it is disclosed."). See also *Atlas Powder Co. v. IRECO, Inc.*, 190 F.3d 1342, 1349, 51 USPQ2d 1943, 1948 (Fed. Cir. 1999) (Claimed composition was anticipated by prior art reference that inherently met claim limitation of "sufficient aeration" even though reference taught away from air entrapment or purposeful aeration.).

2132 35 U.S.C. 102(a)

35 U.S.C. 102. Conditions for patentability; novelty and loss of right to patent.

A person shall be entitled to a patent unless -

(a) the invention was known or used by others in this country, or patented or described in a printed publication in this or a foreign country, before the invention thereof by the applicant for a patent.

*****

I. "KNOWN OR USED"

"Known or Used" Means Publicly Known or Used

"The statutory language 'known or used by others in this country' (35 U.S.C. § 102(a)), means knowledge or use which is accessible to the public." *Carella v. Starlight Archery,* 804 F.2d 135, 231 USPQ 644 (Fed. Cir. 1986). The knowledge or use is accessible to the public if there has been no deliberate attempt to keep it secret. *W. L. Gore & Assoc. v. Garlock, Inc.,* 721 F.2d 1540, 220 USPQ 303 (Fed. Cir. 1983).

See MPEP § 2128 - § 2128.02 for case law concerning public accessibility of publications.

Another's Sale of a Product Made by a Secret Process Can Be a 35 U.S.C. 102(a) Public Use if the Process Can Be Determined by Examining the Product

"The nonsecret use of a claimed process in the usual course of producing articles for commercial purposes is a public use." But a secret use of the process coupled with the sale of the product does not result in a public use of the process unless the public could learn the claimed process by examining the product. Therefore, secret use of a process by another, even if the product is commercially sold, cannot result in a rejection under 35 U.S.C. 102(a) if an examination of the product would not reveal the process. *Id.*

II. "IN THIS COUNTRY"

Only Knowledge or Use in the U.S. Can Be Used in a 35 U.S.C. 102(a) Rejection

The knowledge or use relied on in a 35 U.S.C. 102(a) rejection must be knowledge or use "in this country." Prior knowledge or use which is not present in the United States, even if widespread in a foreign country, cannot be the basis of a rejection under 35 U.S.C. 102(a). *In re Ekenstam,* 256 F.2d 321, 118 USPQ 349 (CCPA 1958). Note that the changes made to 35 U.S.C. 104 by NAFTA (Public Law 103-182) and Uruguay Round Agreements Act (Public Law 103-465) do not modify the meaning of "in this country" as used in 35 U.S.C. 102(a) and thus "in this country" still means in the United States for purposes of 35 U.S.C. 102(a) rejections.

III. "BY OTHERS"

"Others" Means Any Combination of Authors or Inventors Different Than the Inventive Entity

The term "others" in 35 U.S.C. 102(a) refers to any entity which is different from the inventive entity. The entity need only differ by one person to be "by others." This holds true for all types of references eligible as prior art under 35 U.S.C. 102(a) including publications as well as public knowledge and use. Any other interpretation of 35 U.S.C. 102(a) "would negate the one year [grace] period afforded under § 102(b)." *In re Katz,* 687 F.2d 450, 215 USPQ 14 (CCPA 1982).

IV. "PATENTED IN THIS OR A FOREIGN COUNTRY"

See MPEP § 2126 for information on the use of secret patents as prior art.

2132.01 Publications as 35 U.S.C. 102(a) Prior Art

35 U.S.C. 102(a) *PRIMA FACIE* CASE IS ESTABLISHED IF REFERENCE PUBLICATION IS "BY OTHERS"

A *prima facie* case is made out under 35 U.S.C. 102(a) if, within 1 year of the filing date, the invention, or an obvious variant thereof, is described in a "printed publication" whose authorship differs in any way from the inventive entity unless it is stated within the publication itself that the publication is describing the applicant's work. *In re Katz,* 687 F.2d 450, 215 USPQ 14 (CCPA 1982). See MPEP § 2128 for case law on what constitutes a "printed publication." Note that when the reference is a U.S. patent published within the year prior to the application filing date, a 35 U.S.C. 102(e) rejection should be made. See MPEP § 2136 - § 2136.05 for case law dealing with 102(e).

APPLICANT CAN REBUT *PRIMA FACIE* CASE BY SHOWING REFERENCE'S DISCLOSURE WAS DERIVED FROM APPLICANT'S OWN WORK

Applicant's disclosure of his or her own work within the year before the application filing date cannot be used against him or her under 35 U.S.C. 102(a). *In re Katz*, 687 F.2d 450, 215 USPQ 14 (CCPA 1982) (discussed below). Therefore, where the applicant is one of the co-authors of a publication cited against his or her application, the publication may be removed as a reference by the filing of affidavits made out by the other authors establishing that the relevant portions of the publication originated with, or were obtained from, applicant. Such affidavits are called disclaiming affidavits. *Ex parte Hirschler*, 110 USPQ 384 (Bd. App. 1952). The rejection can also be overcome by submission of a specific declaration by the applicant establishing that the article is describing applicant's own work. *In re Katz*, 687 F.2d 450, 215 USPQ 14 (CCPA 1982). However, if there is evidence that the co-author has refused to disclaim inventorship and believes himself or herself to be an inventor, applicant's affidavit will not be enough to establish that applicant is the sole inventor and the rejection will stand. *Ex parte Kroger*, 219 USPQ 370 (Bd. Pat. App. & Int. 1982) (discussed below). It is also possible to overcome the rejection by adding the coauthors as inventors to the application if the requirements of 35 U.S.C. 116, third paragraph are met. *In re Searles*, 422 F.2d 431, 164 USPQ 623 (CCPA 1970).

In *In re Katz*, 687 F.2d 450, 215 USPQ 14 (CCPA 1982), Katz stated in a declaration that the coauthors of the publication, Chiorazzi and Eshhar, "were students working under the direction and supervision of the inventor, Dr. David H. Katz." The court held that this declaration, in combination with the fact that the publication was a research paper, was enough to establish Katz as the sole inventor and that the work described in the publication was his own. In research papers, students involved only with assay and testing are normally listed as coauthors but are not considered co-inventors.

In *Ex parte Kroger*, 219 USPQ 370 (Bd. Pat. App. & Inter. 1982), Kroger, Knaster and others were listed as authors on an article on photovoltaic power generation. The article was used to reject the claims of an application listing Kroger and Rod as inventors. Kroger and Rod submitted affidavits declaring themselves to be the inventors. The affidavits also stated that Knaster merely carried out assignments and worked under the supervision and direction of Kroger. The Board stated that if this were the only evidence in the case, it would be established, under *In re Katz*, that Kroger and Rod were the only inventors. However, in this case, there was evidence that Knaster had refused to sign an affidavit disclaiming inventorship and Knaster had introduced evidence into the case in the form of a letter to the PTO in which he alleged that he was a co-inventor. The Board held that the evidence had not been fully developed enough to overcome the rejection. Note that the rejection had been made under 35 U.S.C. 102(f) but the Board treated the issue the same as if it had arisen under 35 U.S.C. 102(a). See also case law dealing with overcoming 102(e) rejections as presented in MPEP § 2136.05. Many of the issues are the same.

A 37 CFR 1.131 AFFIDAVIT CAN BE USED TO OVERCOME A 35 U.S.C. 102(a) REJECTION

When the reference is not a statutory bar under 35 U.S.C. 102(b), (c), or (d), applicant can overcome the rejection by swearing back of the reference through the submission of an affidavit under 37 CFR 1.131. *In re Foster*, 343 F.2d 980, 145 USPQ 166 (CCPA 1965). If the reference is disclosing applicant's own work as derived from him or her, applicant may submit either a 37 CFR 1.131 affidavit to antedate the reference or a 37 CFR 1.132 affidavit to show derivation of the reference subject matter from applicant and invention by applicant. *In re Facius*, 408 F.2d 1396, 161 USPQ 294 (CCPA 1969). See MPEP § 715 for more information on when an affidavit under 37 CFR 1.131 can be used to overcome a reference and what evidence is required.

2133 35 U.S.C. 102(b)

35 U.S.C. 102. Conditions for patentability; novelty and loss of right to patent.

A person shall be entitled to a patent unless -

*****

(b) the invention was patented or described in a printed publication in this or a foreign country or in public use or on sale in this country, more than one year prior to the date of application for patent in the United States.

*****

THE 1-YEAR GRACE PERIOD IS EXTENDED TO THE NEXT WORKING DAY IF IT WOULD OTHERWISE END ON A HOLIDAY OR WEEKEND

Publications, patents, public uses and sales must occur "more than one year prior to the date of application for patent in the United States" in order to bar a patent under 35 U.S.C. 102(b). However, applicant's own activity will not bar a patent if the 1-year grace period expires on a Saturday, Sunday, or Federal holiday and the application's U.S. filing date is the next succeeding business day. *Ex parte Olah*, 131 USPQ 41 (Bd. App. 1960). Despite changes to 37 CFR 1.6(a)(2) and 1.10 which require the PTO to accord a filing date to an application as of the date of deposit as "Express Mail" with the U.S. Postal Service in accordance with 37 CFR 1.10 (e.g., a Saturday filing date), the rule changes do not affect applicant's concurrent right to defer the filing of an application until the next business day when the last day for "taking any action" falls on a Saturday, Sunday, or a Federal holiday (e.g., the last day of the 1-year grace period falls on a Saturday).

THE 1-YEAR TIME BAR IS MEASURED FROM THE U.S. FILING DATE

If one discloses his or her own work more than 1 year before the filing of the patent application, that person is barred from obtaining a patent. *In re Katz*, 687 F.2d 450, 454, 215 USPQ 14, 17 (CCPA 1982). The 1-year time bar is measured from the U.S. filing date. Thus, applicant will be barred from obtaining a patent if the public came into possession of the invention on a date before the 1-year grace period ending with the U.S. filing date. It does not matter how the public came into possession of the invention. Public possession could occur by a public use, public sale, a publication, a patent or any combination of these. In addition, the prior art need not be identical to the claimed invention but will bar patentability if it is an obvious variant thereof. *In re Foster*, 343 F.2d 980, 145 USPQ 166 (CCPA 1966). See MPEP § 706.02 regarding the effective U.S. filing date of an application.

2133.01 Rejections of Continuation-In-Part (CIP) Applications

When applicant files a continuation-in-part whose claims are not supported by the parent application, the effective filing date is the filing date of the child CIP. Any prior art disclosing the invention or an obvious variant thereof having a critical reference date more than 1 year prior to the filing date of the child will bar the issuance of a patent under 35 U.S.C. 102(b). *Paperless Accounting v. Bay Area Rapid Transit System*, 804 F.2d 659, 665, 231 USPQ 649, 653 (Fed. Cir. 1986).

2133.02 Rejections Based on Publications and Patents

APPLICANT'S OWN WORK WHICH WAS AVAILABLE TO THE PUBLIC BEFORE THE GRACE PERIOD MAY BE USED IN A 35 U.S.C. 102(b) REJECTION

"Any invention described in a printed publication more than one year prior to the date of a patent application is prior art under Section 102(b), even if the printed publication was authored by the patent applicant." *De Graffenried v. United States*, 16 USPQ2d 1321, 1330 n.7 (Cl. Ct. 1990). "Once an inventor has decided to lift the veil of secrecy from his [or her] work, he [or she] must choose between the protection of a federal patent, or the dedication of his [or her] idea to the public at large." *Bonito Boats, Inc. v. Thunder Craft Boats, Inc.*, 489 U.S. 141, 148, 9 USPQ2d 1847, 1851 (1989).

A 35 U.S.C. 102(b) REJECTION CREATES A STATUTORY BAR TO PATENTABILITY OF THE REJECTED CLAIMS

A rejection under 35 U.S.C. 102(b) cannot be overcome by affidavits and declarations under 37 CFR 1.131 (Rule 131 Declarations), foreign priority dates, or evidence that applicant himself invented the subject matter. Outside the 1-year grace period, applicant is barred from obtaining a patent containing any anticipated or obvious claims. *In re Foster*, 343 F.2d 980, 984, 145 USPQ 166, 170 (CCPA 1965).

2133.03 Rejections Based on "Public Use" or "On Sale"

35 U.S.C. 102(b) "contains several distinct bars to patentability, each of which relates to activity or disclosure more than one year prior to the date of the application. Two of these - the 'public use' and the 'on sale' objections - are sometimes considered together although it is quite clear that either may apply when the other does not." *Dart Indus. v. E.I. du Pont de Nemours & Co.*, 489 F.2d 1359, 1365, 179 USPQ 392, 396 (7th Cir. 1973). There may be a public use of an invention absent any sales activity. Likewise, there may be a nonpublic, e.g., "secret," sale or offer to sell an invention which nevertheless constitutes a statutory bar. *Hobbs v. United States*, 451 F.2d 849, 859-60, 171 USPQ 713, 720 (5th Cir. 1971).

In similar fashion, not all "public use" and "on sale" activities will necessarily occasion the identical result. Although both activities affect how an inventor may use an invention prior to the filing of a patent application, "non-commercial" 35 U.S.C. 102(b) activity may not be viewed the same as similar "commercial" activity. See MPEP § 2133.03(a) and § 2133.03(e)(1). Likewise, "public use" activity by an applicant may not be considered in the same light as similar "public use" activity by one other than an applicant. See MPEP § 2133.03(a) and § 2133.03(e)(7). Additionally, the concepts of "completion" and "experimental use" have differing significance in "commercial" and "non-commercial" environments. See MPEP § 2133.03(c) and § 2133.03(e) - § 2133.03(e)(6).

It should be noted that 35 U.S.C. 102(b) may create a bar to patentability either alone, if the device in public use or placed on sale anticipates a later claimed invention, or in conjunction with 35 U.S.C. 103, if the claimed invention would have been obvious from the device in conjunction with the prior art. *LaBounty Mfg. v. United States Int'l Trade Comm'n*, 958 F.2d 1066, 1071, 22 USPQ2d 1025, 1028 (Fed. Cir. 1992).

POLICY CONSIDERATIONS

(A) "One policy underlying the [on-sale] bar is to obtain widespread disclosure of new inventions to the public via patents as soon as possible." *RCA Corp. v. Data Gen. Corp.*, 887 F.2d 1056, 1062, 12 USPQ2d 1449, 1454 (Fed. Cir. 1989).

(B) The public use and on-sale bars are meant to prevent the inventor from commercially exploiting the exclusivity of his [or her] invention substantially beyond the statutorily authorized period. *RCA Corp. v. Data Gen. Corp.*, 887 F.2d 1056, 1062, 12 USPQ2d 1449, 1454 (Fed. Cir. 1989). See MPEP § 2133.03(e)(1).

(C) Another underlying policy for the public use and on-sale bars is to discourage "the removal of inventions from the public domain which the public justifiably comes to believe are freely available." *Manville Sales Corp. v. Paramount Sys., Inc.*, 917 F.2d 544, 549, 16 USPQ2d 1587, 1591 (Fed. Cir. 1990).

2133.03(a) "Public Use"

ONE USE IN THE PUBLIC DOMAIN BY ONE PERSON MAY BAR A PATENT

"[T]o constitute the public use of an invention it is not necessary that more than one of the patent articles should be publicly used. The use of a great number may tend to strengthen the proof, but one well defined case of such use is just as effectual to annul the patent as many." Likewise, it is not necessary that more than one person use the invention. *Egbert v. Lippmann*, 104 U.S. 333, 336 (1881).

PUBLIC KNOWLEDGE IS NOT NECESSARILY PUBLIC USE UNDER 35 U.S.C. 102(b)

Mere knowledge of the invention by the public does not warrant rejection under 35 U.S.C. 102(b). 35 U.S.C. 102(b) bars public use or sale, not public knowledge. *TP Labs., Inc., v. Professional Positioners, Inc.*, 724 F.2d 965, 970, 220 USPQ 577, 581 (Fed. Cir. 1984).

Note, however, that public knowledge may provide grounds for rejection under 35 U.S.C. 102(a). See MPEP § 2132.

A. Commercial Versus Noncommercial Use and the Impact of Secrecy

1. "Public Use" and "Non-secret Use" Are Not Necessarily Synonymous

"Public" is not necessarily synonymous with "non-secret." The fact "that non-secret uses of the device were made [by the inventor or someone connected

with the inventor] prior to the critical date is not itself dispositive of the issue of whether activity barring a patent under 35 U.S.C. 102(b) occurred. The fact that the device was not hidden from view may make the use not secret, but nonsecret use is not *ipso facto* 'public use' activity. Nor, it must be added, is all secret use *ipso facto* not 'public use' within the meaning of the statute," if the inventor is making commercial use of the invention under circumstances which preserve its secrecy. *TP Labs., Inc. v. Professional Positioners, Inc.*, 724 F.2d 965, 972, 220 USPQ 577, 583 (Fed. Cir. 1983) (citations omitted).

2. Even If the Invention Is Hidden, Inventor Who Puts Machine or Article Embodying the Invention in Public View Is Barred from Obtaining a Patent as the Invention Is in Public Use

When the inventor or someone connected to the inventor puts the invention on display or sells it, there is a "public use" within the meaning of 35 U.S.C. 102(b) even though by its very nature an invention is completely hidden from view as part of a larger machine or article, if the invention is otherwise used in its natural and intended way and the larger machine or article is accessible to the public. *In re Blaisdell*, 242 F.2d 779, 783, 113 USPQ 289, 292 (CCPA 1957); *Hall v. Macneale*, 107 U.S. 90, 96-97 (1882); *Ex parte Kuklo*, 25 USPQ2d 1387, 1390 (Bd. Pat. App. & Inter. 1992) (Display of equipment including the structural features of the claimed invention to visitors of laboratory is public use even though public did not see inner workings of device. The person to whom the invention is publicly disclosed need not understand the significance and technical complexities of the invention.).

3. There Is No Public Use If Inventor Restricted Use to Locations Where There Was a Reasonable Expectation of Privacy and the Use Was for His or Her Own Enjoyment

An inventor's private use of the invention, for his or her own enjoyment is not a public use. *Moleculon Research Corp. v. CBS, Inc.*, 793 F.2d 1261, 1265, 229 USPQ 805, 809 (Fed. Cir. 1986) (Inventor showed inventive puzzle to close friends while in his dorm room and later the president of the company at which he was working saw the puzzle on the inventor's desk and they discussed it. Court held that the inventor retained control and thus these actions did not result in a "public use.").

B. *Use by Third Parties Deriving the Invention from Applicant*

An Invention Is in Public Use If the Inventor Allows Another To Use the Invention Without Restriction or Obligation of Secrecy

"Public use" of a claimed invention under 35 U.S.C. 102(b) occurs when the inventor allows another person to use the invention without limitation, restriction or obligation of secrecy to the inventor." *In re Smith*, 714 F.2d 1127, 1134, 218 USPQ 976, 983 (Fed. Cir. 1983). The presence or absence of a confidentiality agreement is not itself determinative of the public use issue, but is one factor to be considered along with the time, place, and circumstances of the use which show the amount of control the inventor retained over the invention. *Moleculon Research Corp. v. CBS, Inc.*, 793 F.2d 1261, 1265, 229 USPQ 805, 809 (Fed. Cir. 1986). See *Ex parte C*, 27 USPQ2d 1492, 1499 (Bd. Pat. App. & Inter. 1992) (Inventor sold inventive soybean seeds to growers who contracted and were paid to plant the seeds to increase stock for later sale. The commercial nature of the use of the seed coupled with the "on-sale" aspects of the contract and apparent lack of confidentiality requirements rose to the level of a "public use" bar.); *Egbert v. Lippmann*, 104 U.S. 333, 336 (1881) (Public use found where inventor allowed another to use inventive corset insert, though hidden from view during use, because he did not impose an obligation of secrecy or restrictions on its use.).

C. *Use by Independent Third Parties*

Use by an Independent Third Party Is Public Use If It Sufficiently "Informs" the Public of the Invention or a Competitor Could Reasonably Ascertain the Invention

Any "nonsecret" use of an invention by someone unconnected to the inventor, such as someone who has independently made the invention, in the ordinary course of a business for trade or profit may be a "public use," *Bird Provision Co. v. Owens Country Sausage, Inc.*, 568 F.2d 369, 374-76, 197 USPQ 134, 138-40 (5th Cir. 1978). Additionally, even a

"secret" use by another inventor of a machine or process to make a product is "public" if the details of the machine or process are ascertainable by inspection or analysis of the product that is sold or publicly displayed. *Gillman v. Stern*, 114 F.2d 28, 46 USPQ 430 (2d Cir. 1940); *Dunlop Holdings, Ltd. v. Ram Golf Corp.*, 524 F.2d 33, 36-7, 188 USPQ 481, 483-484 (7th Cir. 1975). If the details of an inventive process are not ascertainable from the product sold or displayed and the third party has kept the invention as a trade secret then that use is not a public use and will not bar a patent issuing to someone unconnected to the user. *W.L. Gore & Assocs. v. Garlock, Inc.*, 721 F.2d 1540, 1550, 220 USPQ 303, 310 (Fed. Cir. 1983). However, a device qualifies as prior art if it places the claimed features in the public's possession before the critical date even if other unclaimed aspects of the device were not publicly available. *Lockwood v. American Airlines, Inc.*, 41 USPQ2d 1961, 1964-65 (Fed. Cir. 1997) (Computer reservation system was prior art even though "essential algorithms of the SABRE software were proprietary and confidential and...those aspects of the system that were readily apparent to the public would not have been sufficient to enable one skilled in the art to duplicate the [unclaimed aspects of the] system."). The extent that the public becomes "informed" of an invention involved in public use activity by one other than an applicant depends upon the factual circumstances surrounding the activity and how these comport with the policies underlying the on sale and public use bars. *Manville Sales Corp. v. Paramount Sys., Inc.*, 917 F.2d 544, 549, 16 USPQ2d 1587, 1591 (Fed. Cir. 1990) (quoting *King Instrument Corp. v. Otari Corp.*, 767 F.2d 833, 860, 226 USPQ 402, 406 (Fed. Cir. 1985)). By way of example, in an allegedly "secret" use by a third party other than an applicant, if a large number of employees of such a party, who are not under a promise of secrecy, are permitted unimpeded access to an invention, with affirmative steps by the party to educate other employees as to the nature of the invention, the public is "informed." *Chemithon Corp. v. Proctor & Gamble Co.*, 287 F. Supp. 291, 308, 159 USPQ 139, 154 (D.Md. 1968), *aff'd.*, 427 F.2d 893, 165 USPQ 678 (4th Cir. 1970).

Even if public use activity by one other than an applicant is not sufficiently "informing," there may be adequate grounds upon which to base a rejection under 35 U.S.C. 102(f) and 35 U.S.C. 102(g). See *Dunlop Holdings Ltd. v. Ram Golf Corp.*, 524 F.2d 33, 188 USPQ 481 (7th Cir. 1975). See MPEP § 2137 and § 2138.

2133.03(b) "On Sale"

An impermissible sale has occurred if there was a definite sale, or offer to sell, more than 1 year before the effective filing date of the U.S. application and the subject matter of the sale, or offer to sell, fully anticipated the claimed invention or would have rendered the claimed invention obvious by its addition to the prior art. *Ferag AG v. Quipp, Inc.*, 45 F.3d 1562, 1565, 33 USPQ2d 1512, 1514 (Fed. Cir. 1995).

I. THE MEANING OF "SALE"

A sale is a contract between parties wherein the seller agrees "to give and to pass rights of property" in return for the buyer's payment or promise "to pay the seller for the things bought or sold." *In re Caveney*, 761 F.2d 671, 676, 226 USPQ 1, 4 (Fed. Cir. 1985).

A. Conditional Sale May Bar a Patent

An invention may be deemed to be "on sale" even though the sale was conditional. The fact that the sale is conditioned on buyer satisfaction does not, without more, prove that the sale was for an experimental purpose. *Strong v. General Elec. Co.*, 434 F.2d 1042, 1046, 168 USPQ 8, 12 (5th Cir. 1970).

B. Nonprofit Sale May Bar a Patent

A "sale" need not be for profit to bar a patent. If the sale was for the commercial exploitation of the invention, it is "on sale" within the meaning of 35 U.S.C. 102(b). *In re Dybel*, 524 F.2d 1393, 1401, 187 USPQ 593, 599 (CCPA 1975) ("Although selling the devices for a profit would have demonstrated the purpose of commercial exploitation, the fact that appellant realized no profit from the sales does not demonstrate the contrary.").

C. A Single Sale or Offer To Sell May Bar a Patent

Even a single sale or offer to sell the invention may bar patentability under 35 U.S.C. 102(b). *Consolidated Fruit-Jar Co. v. Wright*, 94 U.S. 92, 94 (1876);

Atlantic Thermoplastics Co. v. Faytex Corp., 970 F.2d 834, 836-37, 23 USPQ2d 1481, 1483 (Fed. Cir. 1992).

D. A Sale of Rights Is Not a Sale of the Invention and Will Not in Itself Bar a Patent

"An assignment or sale of the rights, such as patent rights, in the invention is not a sale of 'the invention' within the meaning of section 102(b)." The sale must involve the delivery of the physical invention itself. *Moleculon Research Corp. v. CBS, Inc.*, 793 F.2d 1261, 1265, 229 USPQ 805, 809 (Fed. Cir. 1986).

E. Buyer Must Be Uncontrolled by the Seller or Offerer

A sale or offer for sale must take place between separate entities. *In re Caveney*, 761 F.2d 671, 676, 226 USPQ 1, 4 (Fed. Cir. 1985). "Where the parties to the alleged sale are related, whether there is a statutory bar depends on whether the seller so controls the purchaser that the invention remains out of the public's hands. *Ferag AG v. Quipp, Inc.*, 45 F.3d 1562, 1566, 33 USPQ2d 1512, 1515 (Fed. Cir. 1995) (Where the seller is a parent company of the buyer company, but the President of the buyer company had "essentially unfettered" management authority over the operations of the buyer company, the sale was a statutory bar.).

II. OFFERS FOR SALE

A. Rejected or Unreceived Offer for Sale Is Enough To Bar a Patent

Since the statute creates a bar when an invention is placed "on sale," a mere offer to sell is sufficient commercial activity to bar a patent. *In re Theis*, 610 F.2d 786, 791, 204 USPQ 188, 192 (CCPA 1979). Even a rejected offer may create an on sale bar. *UMC Elecs. v. United States*, 816 F.2d 647, 653, 2 USPQ2d 1465, 1469 (Fed. Cir. 1987). In fact, the offer need not even be actually received by a prospective purchaser. *Wende v. Horine*, 225 F. 501 (7th Cir. 1915).

B. Delivery of the Offered Item Is Not Required

"It is not necessary that a sale be consummated for the bar to operate." *Buildex v. Kason Indus., Inc.*, 849 F.2d 1461, 1463-64, 7 USPQ2d 1325, 1327-28 (Fed. Cir. 1988) (citations omitted). See also *Weatherchem Corp. v. J.L. Clark Inc.*, 163 F.3d 1326, 1333, 49 USPQ2d 1001, 1006-07 (Fed. Cir. 1998) (A signed purchase agreement prior to the critical date constituted a commercial offer; it was immaterial that there was no delivery of later patented caps and no exchange of money until after critical date.).

C. Seller Need Not Have the Goods "On Hand" when the Offer for Sale Is Made

Goods need not be "on hand" and transferred at the time of the sale or offer. The date of the offer for sale is the effective date of the "on sale" activity. *J. A. La Porte, Inc. v. Norfolk Dredging Co.*, 787 F.2d 1577, 1582, 229 USPQ 435, 438 (Fed. Cir. 1986). However, the invention must be complete and "ready for patenting" (see MPEP § 2133.03(c)) before the critical date. *Pfaff v. Wells Elecs., Inc.*, 525 U.S. 55, 67, 119 S.Ct. 304, 311-12, 48 USPQ2d 1641, 1647 (1998). See also *Micro Chemical, Inc. v. Great Plains Chemical Co.*, 103 F.3d 1538, 1545, 41 USPQ2d 1238, 1243 (Fed. Cir. 1997) (The on-sale bar was not triggered by an offer to sell because the inventor "was not close to completion of the invention at the time of the alleged offer and had not demonstrated a high likelihood that the invention would work for its intended purpose upon completion."); *Shatterproof Glass Corp. v. Libbey-Owens Ford Co.*, 758 F.2d 613, 225 USPQ 634 (Fed. Cir. 1985) (Where there was no evidence that the samples shown to the potential customers were made by the new process and apparatus, the offer to sell did not rise to the level of an on sale bar.). Compare *Barmag Barmer Maschinenfabrik AG v. Murata Mach., Ltd.*, 731 F.2d 831, 221 USPQ 561 (Fed. Cir. 1984) (Where a "make shift" model of the inventive product was shown to the potential purchasers in conjunction with the offer to sell, the offer was enough to bar a patent under 35 U.S.C. 102(b).).

III. SALE BY INVENTOR, ASSIGNEE OR OTHERS ASSOCIATED WITH THE INVENTOR IN THE COURSE OF BUSINESS

A. Sale Activity Need Not Be Public

Unlike questions of public use, there is no requirement that "on sale" activity be "public." "Public" as used in 35 U.S.C. 102(b) modifies "use" only. "Public" does not modify "sale." *Hobbs v. United States*, 451 F.2d 849, 171 USPQ 713, 720 (5th Cir. 1971).

B. Inventor's Consent to the Sale Is Not a Prerequisite To Finding an On Sale Bar

If the invention was placed on sale by a third party who obtained the invention from the inventor, a patent is barred even if the inventor did not consent to the sale or have knowledge that the invention was embodied in the sold article. *Electric Storage Battery Co. v. Shimadzu*, 307 U.S. 5, 41 USPQ 155 (1938); *In re Blaisdell*, 242 F.2d 779, 783, 113 USPQ 289, 292 (CCPA 1957); *CTS Corp. v. Electro Materials Corp. of America,* 469 F. Supp. 801, 819, 202 USPQ 22, 38 (S.D.N.Y. 1979).

C. Objective Evidence of Intent To Sell Is Needed

In determining if a sale or offer to sell has occurred a key question to ask is whether, under the totality of the circumstances, the inventor placed his or her invention on sale, objectively manifested by a sale or offer for sale of a product that embodies the invention claimed in the application. Objective evidence such as a description of the inventive product in the contract of sale or in another communication with the purchaser controls over an uncommunicated intent by the seller to deliver the inventive product under the contract for sale. *Ferag AG v. Quipp, Inc.*, 45 F.3d 1562, 1567, 33 USPQ2d 1512, 1516 (Fed. Cir. 1995) (On sale bar found where initial negotiations and agreement containing contract for sale neither clearly specified nor precluded use of the inventive design but an order confirmation more than 1 year prior to filing of patent application for the inventive design did specify use of inventive design.). The purchaser need not have actual knowledge of the invention for it to be on sale. "For example, merely offering to sell a product by way of an advertisement or invoice may be evidence of a definite offer for sale or a sale of a claimed invention even though no details are disclosed. That the offered product is in fact the claimed invention may be established by any relevant evidence, such as memoranda, drawings, correspondence, and testimony of witnesses." *RCA Corp. v. Data Gen. Corp.*, 887 F.2d 1056, 1060, 12 USPQ2d 1449, 1452 (Fed. Cir. 1989). However, "what the purchaser reasonably believes the inventor to be offering is relevant to whether, on balance, the offer objectively may be said to be of the patented invention." *Envirotech Corp. v. Westech Eng'g, Inc.*, 904 F.2d 1571, 1576, 15 USPQ2d 1230, 1234 (Fed. Cir. 1990) (Where a proposal to supply a general contractor with a product did not mention a new design but, rather, referenced a prior art design, the uncommunicated intent of the supplier to supply the new design if awarded the contract did not constitute an "on sale" bar to a patent on the new design, even though the supplier's bid reflected the lower cost of the new design.).

IV. SALES BY INDEPENDENT THIRD PARTIES

A. Sales or Offers for Sale by Independent Third Parties Will Bar a Patent

Sale or offer for sale of the invention by an independent third party more than 1 year before the filing date of applicant's patent will bar applicant from obtaining a patent. "An exception to this rule exists where a patented method is kept secret and remains secret after a sale of the unpatented product of the method. Such a sale prior to the critical date is a bar if engaged in by the patentee or patent applicant, but not if engaged in by another." *In re Caveney*, 761 F.2d 671, 675-76, 226 USPQ 1, 3-4 (Fed. Cir. 1985).

B. Nonprior Art Publications Can Be Used as Evidence of Sale Before the Critical Date

Abstracts identifying a product's vendor containing information useful to potential buyers such as whom to contact, price terms, documentation, warranties, training and maintenance along with the date of product release or installation before the inventor's critical date may provide sufficient evidence of prior sale by a third party to support a rejection based on 35 U.S.C. 102(b) or 103. *In re Epstein*, 32 F.3d 1559, 31 USPQ2d 1817 (Fed. Cir. 1994) (Examiner's rejection was based on nonprior art published abstracts which disclosed software products meeting the claims. The abstracts specified software release dates and dates of first installation which were more than 1 year before applicant's filing date.).

2133.03(c) The "Invention"

35 U.S.C. 102. Conditions for patentability; novelty and loss of right to patent.

A person shall be entitled to a patent unless -

*****

(b) the invention was...in public use or on sale in this country, more than one year prior to the date of the application for patent in the United States

*****

(Emphasis added).

I. LEVEL OF COMPLETENESS REQUIRED

The level of completion required likely will differ in cases of "public use" which are not intertwined with a sale. *UMC Elecs. Co. v. United States*, 816 F.2d 647, 652 n.6, 2 USPQ2d 1465, 1468 n.6 (Fed. Cir. 1987). The court decisions do not address the level required in pure "public use" cases but it is unlikely that the invention can be publicly used without a working embodiment. The case law presented below is directed to "on sale" situations.

The Invention Must Be "Ready for Patenting" at the Time of the Sale

In *Pfaff v. Wells Elecs., Inc.*, 119 S.Ct. 304, 311-12, 48 USPQ2d 1641, 1647 (1998), the Supreme Court enunciated a two-prong test for determining whether an invention was "on sale" within the meaning of 35 U.S.C. 102(b) even if it has not yet been reduced to practice. "[T]he on-sale bar applies when two conditions are satisfied before the critical date [more than one year before the effective filing date of the U.S. application]. First, the product must be the subject of a commercial offer for sale.... Second, the invention must be ready for patenting." *Pfaff*, 119 S.Ct. at 311-12, 48 USPQ2d at 1646-47. "Ready for patenting," the second prong of the *Pfaff* test, "may be satisfied in at least two ways: by proof of reduction to practice before the critical date; or by proof that prior to the critical date the inventor had prepared drawings or other descriptions of the invention that were sufficiently specific to enable a person skilled in the art to practice the invention." *Pfaff*, 199 S.Ct. at 311-12, 48 USPQ2d at 1647 (The patent was held invalid because the invention for a computer chip socket was "ready for patenting" when it was offered for sale more than one year prior to the application filing date. Even though the invention had not yet been reduced to practice, the manufacturer was able to produce the claimed computer chip sockets using the inventor's detailed drawings and specifications, and those sockets contained all elements of invention claimed in the patent.). See also *Weatherchem Corp. v. J.L. Clark Inc.*, 163 F.3d 1326, 1333, 49 USPQ2d 1001, 1006-07 (Fed. Cir. 1998) (The invention was held "ready for patenting" since the detailed drawings of plastic dispensing caps offered for sale "contained each limitation of the claims and were sufficiently specific to enable person skilled in art to practice the invention".).

If the invention was actually reduced to practice before being sold or offered for sale more than 1 year before filing of the application, a patent will be barred. *Vanmoor v. Wal-Mart Stores, Inc.*, 201 F.3d 1363, 1366-67, 53 USPQ2d 1377, 1379 (Fed. Cir. 2000) ("Here the pre-critical date sales were of completed cartridges made to specifications that remained unchanged to the present day, showing that any invention embodied in the accused cartridges was reduced to practice before the critical date. The *Pfaff* ready for patenting condition is also satisfied because the specification drawings, available prior to the critical date, were actually used to produce the accused cartridges."); *In re Hamilton*, 882 F.2d 1576, 1580, 11 USPQ2d 1890, 1893 (Fed. Cir. 1989). "If a product that is offered for sale inherently possesses each of the limitations of the claims, then the invention is on sale, whether or not the parties to the transaction recognize that the product possesses the claimed characteristics." *Abbott Laboratories v. Geneva Pharmaceuticals, Inc.*, 182 F.3d 1315, 1319, 51 USPQ2d 1307, 1310 (Fed. Cir. 1999) (Claim for a particular anhydrous crystalline form of a pharmaceutical compound was held invalid under the on-sale bar of 35 U.S.C. 102(b), even though the parties to the U.S. sales of the foreign manufactured compound did not know the identity of the particular crystalline form.); *STX LLC. v. Brine Inc.*, 211 F.3d 588, 591, 54 USPQ2d 1347, 1350 (Fed. Cir. 2000) (Claim for a lacrosse stick was held invalid under the on-sale bar despite the argument that it was not known at the time of sale whether the sticks possessed the recited "improved playing and handling characteristics." "Subjective qualities inherent in a product, such as 'improved playing and handling', cannot serve as an escape hatch to circumvent an on-sale bar."). Actual reduction to practice in the context of an on-sale bar issue usually requires testing under actual working conditions in such a way as to demonstrate the practical utility of an invention for its intended purpose beyond the probability of failure, unless by virtue of the very simplicity of an

invention its practical operativeness is clear. *Field v. Knowles*, 183 F.2d 593, 601, 86 USPQ 373, 379 (CCPA 1950); *Steinberg v. Seitz*, 517 F.2d 1359, 1363, 186 USPQ 209, 212 (CCPA 1975).

The invention need not be ready for satisfactory commercial marketing for sale to bar a patent. *Atlantic Thermoplastics Co. v. Faytex Corp.*, 970 F.2d 834, 836-37, 23 USPQ2d 1481, 1483 (Fed. Cir. 1992).

II. INVENTOR HAS SUBMITTED A 37 CFR 1.131 AFFIDAVIT OR DECLARATION

Affidavits or declarations submitted under 37 CFR 1.131 to swear behind a reference may constitute, among other things, an admission that an invention was "complete" more than 1 year before the filing of an application. See *In re Foster*, 342 F.2d 980, 987-88, 145 USPQ 166, 173 (CCPA 1965); *Dart Indus. v. E.I. duPont de Nemours & Co.*, 489 F.2d 1359, 1365, 179 USPQ 392, 396 (7th Cir. 1973). Also see MPEP § 715.10.

2133.03(d) "In This Country"

For purposes of judging the applicability of the 35 U.S.C. 102(b) bars, public use or on sale activity must take place in the United States. The "on sale" bar does not generally apply where both manufacture and delivery occur in a foreign country. *Gandy v. Main Belting Co.*, 143 U.S. 587, 593 (1892). However, "on sale" status can be found if substantial activity prefatory to a "sale" occurs in the United States. *Robbins Co. v. Lawrence Mfg. Co.*, 482 F.2d 426, 433, 178 USPQ 577, 583 (9th Cir. 1973). An offer for sale, made or originating in this country, may be sufficient prefatory activity to bring the offer within the terms of the statute, even though sale and delivery take place in a foreign country. The same rationale applies to an offer by a foreign manufacturer which is communicated to a prospective purchaser in the United States prior to the critical date. *CTS Corp. v. Piher Int'l Corp.*, 593 F.2d 777, 201 USPQ 649 (7th Cir. 1979).

2133.03(e) Permitted Activity; Experimental Use

The basic test is that experimentation must be the primary purpose and any commercial exploitation must be incidental.

If the use or sale was experimental, there is no bar under 35 U.S.C. 102(b). "A use or sale is experimental for purposes of section 102(b) if it represents a *bona fide* effort to perfect the invention or to ascertain whether it will answer its intended purpose....If any commercial exploitation does occur, it must be merely incidental to the primary purpose of the experimentation to perfect the invention." *LaBounty Mfg. v. United States Int'l Trade Comm'n*, 958 F.2d 1066, 1071, 22 USPQ2d 1025, 1028 (Fed. Cir. 1992) (quoting *Pennwalt Corp. v. Akzona Inc.*, 740 F.2d 1573, 1581, 222 USPQ 833, 838 (Fed. Cir. 1984)). "The experimental use exception...does not include market testing where the inventor is attempting to gauge consumer demand for his claimed invention. The purpose of such activities is commercial exploitation and not experimentation." *In re Smith*, 714 F.2d 1127, 1134, 218 USPQ 976, 983 (Fed. Cir. 1983).

2133.03(e)(1) Commercial Exploitation

THERE MUST BE NO ATTEMPT AT MARKET PENETRATION BEFORE THE CRITICAL DATE

A strong policy of the on sale and public use bars is the prevention of inventors from exploiting their inventions commercially more than 1 year prior to the filing of a patent application. Therefore, if applicant's precritical date activity is, at any level, an attempt at market penetration, a patent is barred. Thus, even if there is *bona fide* experimental activity, an inventor may not commercially exploit an invention more than 1 year prior to the filing date of an application. *In re Theis*, 610 F.2d 786, 793, 204 USPQ 188, 194 (CCPA 1979).

THE COMMERCIAL ACTIVITY MUST LEGITIMATELY ADVANCE DEVELOPMENT OF THE INVENTION TOWARDS COMPLETION

As the degree of commercial exploitation surrounding 35 U.S.C. 102(b) activity increases, the burden on an applicant to establish clear and convincing evidence of experimental activity with respect to a public use becomes more difficult. Where the examiner has found a *prima facie* case of a sale or an offer to sell, this burden will rarely be met unless clear and convincing necessity for the experimentation is established by the applicant. This does not mean, of

course, that there are no circumstances which would permit alleged experimental activity in an atmosphere of commercial exploitation. In certain circumstances, even a sale may be necessary to legitimately advance the experimental development of an invention if the primary purpose of the sale is experimental. *In re Theis*, 610 F.2d 786, 793, 204 USPQ 188, 194 (CCPA 1979); *Robbins Co. v. Lawrence Mfg. Co.*, 482 F.2d 426, 433, 178 USPQ 577, 582 (9th Cir. 1973). However, careful scrutiny by the examiner of the objective factual circumstances surrounding such a sale is essential. See *Ushakoff v. United States*, 327 F.2d 669, 140 USPQ 341 (Ct.Cl. 1964); *Cloud v. Standard Packaging Corp.*, 376 F.2d 384, 153 USPQ 317 (7th Cir. 1967).

SIGNIFICANT FACTORS INDICATIVE OF "COMMERCIAL EXPLOITATION"

As discussed in MPEP § 2133.03, a policy consideration in questions of 35 U.S.C. 102(b) activity is premature "commercial exploitation" of a "completed" or "ready for patenting" invention (see MPEP § 2133.03(c)). The extent of commercial activity which constitutes 35 U.S.C. 102(b) "on sale" status depends upon the circumstances of the activity, the basic indicator being the subjective intent of the inventor as manifested through objective evidence. The following activities should be used by the examiner as indicia of this subjective intent:

(A) Preparation of various contemporaneous "commercial" documents, e.g., orders, invoices, receipts, delivery schedules, etc.;

(B) Preparation of price lists (*Akron Brass Co. v. Elkhart Brass Mfg. Co.*, 353 F.2d 704, 709, 147 USPQ 301, 305 (7th Cir. 1965) and distribution of price quotations (*Amphenol Corp. v. General. Time Corp.*, 158 USPQ 113, 117 (7th Cir. 1968));

(C) Display of samples to prospective customers (*Cataphote Corp. v. DeSoto Chemical Coatings, Inc.*, 356 F.2d 24, 27, 148 USPQ 527, 529 (9th Cir. 1966) *mod. on other grounds*, 358 F.2d 732, 149 USPQ 159 (9th Cir.), *cert. denied*, 385 U.S. 832 (1966); *Chicopee Mfg. Corp. v. Columbus Fiber Mills Co.*, 165 F.Supp. 307, 323-325, 118 USPQ 53, 65-67 (M.D.Ga. 1958));

(D) Demonstration of models or prototypes (*General Elec. Co. v. United States*, 206 USPQ 260, 266-67 (Ct. Cl. 1979); *Red Cross Mfg. v. Toro Sales Co.*, 525 F.2d 1135, 1140, 188 USPQ 241, 244-45 (7th Cir. 1975); *Philco Corp. v. Admiral Corp.*, 199 F. Supp. 797, 815-16, 131 USPQ 413, 429-30 (D.Del. 1961)), especially at trade conventions (*InterRoyal Corp. v. Simmons Co.*, 204 USPQ 562, 563-65 (S.D. N.Y. 1979)), and even though no orders are actually obtained (*Monogram Mfg. v. F. & H. Mfg.*,144 F.2d 412, 62 USPQ 409, 412 (9th Cir. 1944));

(E) Use of an invention where an admission fee is charged (*In re Josserand*, 188 F.2d 486, 491, 89 USPQ 371, 376 (CCPA 1951); *Greenewalt v. Stanley*, 54 F.2d 195, 12 USPQ 122 (3d Cir. 1931)); and

(F) Advertising in publicity releases, brochures, and various periodicals (*In re Theis*, 610 F.2d 786, 792 n.6, 204 USPQ 188, 193 n. 6 (CCPA 1979); *Inter-Royal Corp. v. Simmons Co.*, 204 USPQ 562, 564-66 (S.D.N.Y.1979); *Akron Brass, Inc. v. Elkhart Brass Mfg., Inc.*, 353 F.2d 704, 709, 147 USPQ 301, 305 (7th Cir.1965); *Tucker Aluminum Prods. v. Grossman*, 312 F.2d 393, 394, 136 USPQ 244, 245 (9th Cir. 1963)).

The above activities may be determinative of "commercial exploitation" even though:

(A) Prices are estimated rather than established,

(B) No commercial production runs have been made, and

(C) The invention is never actually sold. *Chromalloy Am. Corp. v. Alloy Surfaces Co.*, 339 F. Supp. 859, 869, 173 USPQ 295, 301-02 (D.Del. 1972).

2133.03(e)(2) Intent

"When sales are made in an ordinary commercial environment and the goods are placed outside the inventor's control, an inventor's secretly held subjective intent to 'experiment,' even if true, is unavailing without objective evidence to support the contention. Under such circumstances, the customer at a minimum must be made aware of the experimentation." *LaBounty Mfg., Inc. v. United States Int'l Trade Comm'n*, 958 F.2d 1066, 1072, 22 USPQ2d 1025, 1029 (Fed. Cir. 1992) (quoting *Harrington Mfg. Co. v. Powell Mfg. Co.*, 815 F.2d 1478, 1480 n.3, 2 USPQ2d 1364, 1366 n.3 (Fed. Cir. 1986); *Paragon Podiatry Laboratory, Inc. v. KLM Labs., Inc.*, 984 F.2d 1182, 25 USPQ2d 1561 (Fed. Cir. 1993) (Paragon sold the inventive units to the trade as completed devices without any disclosure to either doctors or

patients of their involvement in alleged testing. Evidence of the inventor's secretly held belief that the units were not durable and may not be satisfactory for consumers was not sufficient, alone, to avoid a statutory bar.).

2133.03(e)(3) "Completeness" of the Invention

EXPERIMENTAL USE ENDS WHEN THE INVENTION IS ACTUALLY REDUCED TO PRACTICE

Experimental use "means perfecting or completing an invention to the point of determining that it will work for its intended purpose." Therefore, experimental use "ends with an actual reduction to practice." *RCA Corp. v. Data Gen. Corp.*, 887 F.2d 1056, 1061, 12 USPQ2d 1449, 1453 (Fed. Cir. 1989). If the examiner concludes from the evidence of record that an applicant was satisfied that an invention was in fact "complete," awaiting approval by the applicant from an organization such as Underwriters' Laboratories will not normally overcome this conclusion. *Inter-Royal Corp. v. Simmons Co.*, 204 USPQ 562, 566 (S.D.N.Y. 1979); *Skil Corp. v. Rockwell Manufacturing Co.*, 358 F. Supp. 1257, 1261, 178 USPQ 562, 565 (N.D.Ill. 1973), *aff'd. in part, rev'd in part sub nom. Skil Corp. v. Lucerne Products Inc.*, 503 F.2d 745, 183 USPQ 396, 399 (7th Cir. 1974), *cert. denied*, 420 U.S. 974, 185 USPQ 65 (1975). See MPEP § 2133.03(c) for more information of what constitutes a "complete" invention.

The fact that alleged experimental activity does not lead to specific modifications or refinements of an invention is evidence, although not conclusive evidence, that such activity is not within the realm permitted by the statute. This is especially the case where the evidence of record clearly demonstrates to the examiner that an invention was considered "complete" by an inventor at the time of the activity. Nevertheless, any modifications or refinements which did result from such experimental activity must at least be a feature of the claimed invention to be of any probative value. *In re Theis*, 610 F.2d 786, 793, 204 USPQ 188, 194 (CCPA 1979).

DISPOSAL OF PROTOTYPES

Where a prototype of an invention has been disposed of by an inventor before the critical date, inquiry by the examiner should focus upon the intent of the inventor and the reasonableness of the disposal under all circumstances. The fact that an otherwise reasonable disposal of a prototype involves incidental income is not necessarily fatal. *In re Dybel*, 524 F.2d 1393, 1399, n.5, 187 USPQ 593, 597 n.5 (CCPA 1975). However, if a prototype is considered "complete" by an inventor and all experimentation on the underlying invention has ceased, unrestricted disposal of the prototype constitutes a bar under 35 U.S.C. 102(b). *In re Blaisdell*, 242 F.2d 779, 113 USPQ 289 (CCPA 1957); *contra*, *Watson v. Allen*, 254 F.2d 342, 117 USPQ 68 (D.C. Cir. 1958).

2133.03(e)(4) Factors Indicative of an Experimental Purpose

The Court in *City of Elizabeth v. American Nicholson Pavement Co.*, 97 U.S. 126 (1878) found several factors persuasive of experimental activity:

(A) the nature of the invention was such that any testing had to be to some extent public;

(B) testing had to be for a substantial period of time;

(C) testing was conducted under the supervision and control of the inventor; and

(D) the inventor regularly inspected the invention during the period of experimentation.

Supreme Court decisions subsequent to *City of Elizabeth* identify other significant factors which may be determinative of experimental purpose:

(E) extent of any obligations or limitation placed on a user during a period of experimental activity, as well as the extent of an testing actually performed during such period (*Egbert v. Lippmann*, 104 U.S. 333 (1881));

(F) conditional nature of any sale associated with experimental activity (*Hall v. Macneale*, 107 U.S. 90 (1882)); and

(G) length of time and number of cases in which experimental activity took place, viewed in light of what was reasonably necessary for an alleged experimental purpose (*International Tooth Crown Co. v. Gaylord*, 140 U.S. 55 (1891)).

Other judicial opinions have supplemented these factors by looking to the extent of any:

(H) explicit or implicit obligations placed upon a user to supply an inventor with the results of any testing conducted during an experimental period and the extent of inquiry made by the inventor regarding the testing (*Monon Corporation v. Stoughton Trailers*, 239 F.3d 1253, 57 USPQ2d 1699 (Fed. Cir. 2001); *Robbins Co. v. Lawrence Mfg. Co.*, 178 USPQ 577, 583 (9th Cir. 1973));

(I) disclosure by an inventor to a user regarding what the inventor considers as unsatisfactory operation of the invention (*In re Dybel*, 524 F.2d 1393, 1401, 187 USPQ 593, 599 (CCPA 1975));

(J) effort on the part of an inventor to retrieve any experimental samples at the end of an experimental period (*Monon Corporation v. Stoughton Trailers*, 239 F.3d 1253, 57 USPQ2d 1699 (Fed. Cir. 2001); *Omark Indus. v. Carlton Co.*, 458 F.Supp. 449, 454, 201 USPQ 825, 830 (D.Ore. 1978)); and

(K) a doctor-patient relationship where the inventor/doctor conducted the experimentation (*TP Labs. Inc. v. Professional Positioners, Inc.*, 724 F.2d 965, 971, 220 USPQ 577, 582 (Fed. Cir. 1984).

Summarizing the above, once alleged experimental activity is advanced by an applicant to explain a *prima facie* case under 35 U.S.C. 102(b), the examiner must determine whether the scope and length of the activity were reasonable in terms of the experimental purpose intended by the applicant and the nature of the subject matter involved. No one of, or particular combination of, factors (A) through (K) is necessarily determinative of this purpose.

2133.03(e)(5) Experimentation and Degree of Supervision and Control

THE INVENTOR MUST MAINTAIN SUFFICIENT CONTROL OVER THE INVENTION DURING TESTING BY THIRD PARTIES

As discussed with reference to *City of Elizabeth v. American Nicholson Pavement Co.*, 97 U.S. 126 (1878), a significant determinative factor in questions of experimental purpose is the extent of supervision and control maintained by an inventor over an invention during an alleged period of experimentation. Once a period of experimental activity has ended and supervision and control has been relinquished by an inventor without any restraints on subsequent use of an invention, an unrestricted subsequent use of the invention is a 35 U.S.C. 102(b) bar. *In re Blaisdell*, 242 F.2d 779, 784, 113 USPQ 289, 293 (CCPA 1957).

2133.03(e)(6) Permitted Experimental Activity and Testing

DEVELOPMENTAL TESTING IS PERMITTED

Testing of an invention in the normal context of its technological development is generally within the realm of permitted experimental activity. Likewise, experimentation to determine utility, as that term is applied in 35 U.S.C. 101, may also constitute permissible activity. See *General Motors Corp. v. Bendix Aviation Corp.*, 123 F. Supp. 506, 521, 102 USPQ 58, 69 (N.D.Ind. 1954). For example, where an invention relates to a chemical composition with no known utility, i.e., a patent application for the composition could not be filed (35 U.S.C. 101; 35 U.S.C. 112, first paragraph), continued testing to find utility would likely be permissible under 35 U.S.C. 102(b), absent a sale of the composition or other evidence of commercial exploitation.

MARKET TESTING IS NOT PERMITTED

Experimentation to determine product acceptance, i.e., market testing, is typical of a trader's and not an inventor's experiment and is thus not within the area of permitted experimental activity. *Smith & Davis Mfg. Co. v. Mellon*, 58 F. 705, 707 (8th Cir. 1893) Likewise, testing of an invention for the benefit of appeasing a customer, or to conduct "minor 'tune up' procedures not requiring an inventor's skills, but rather the skills of a competent technician," are also not within the exception. *In re Theis*, 610 F.2d 786, 793, 204 USPQ 188, 193-94 (CCPA 1979).

EXPERIMENTAL ACTIVITY IN THE CONTEXT OF DESIGN APPLICATIONS

The public use of an ornamental design which is directed toward generating consumer interest in the aesthetics of the design is not an experimental use. *In re Mann*, 861 F.2d 1581, 8 USPQ2d 2030 (Fed. Cir. 1988) (display of a wrought iron table at a trade show held to be public use). However, "experimentation directed to functional features of a product also con-

taining an ornamental design may negate what otherwise would be considered a public use within the meaning of section 102(b)." *Tone Brothers, Inc. v. Sysco Corp.*, 28 F.3d 1192, 1196, 31 USPQ2d 1321, 1326 (Fed. Cir. 1994) (A study wherein students evaluated the effect of the functional features of a spice container design may be considered an experimental use.).

2133.03(e)(7) Activity of an Independent Third Party Inventor

EXPERIMENTAL USE EXCEPTION IS PERSONAL TO AN APPLICANT

The statutory bars of 35 U.S.C. 102(b) are applicable even though public use or on sale activity is by a party other than an applicant. Where an applicant presents evidence of experimental activity by such other party, the evidence will not overcome the *prima facie* case under 35 U.S.C. 102(b) based upon the activity of such party unless the activity was under the supervision and control of the applicant. *Magnetics v. Arnold Eng'g Co.*, 438 F.2d 72, 74, 168 USPQ 392, 394 (7th Cir. 1971), *Bourne v. Jones*, 114 F.Supp. 413, 419, 98 USPQ 206, 210 (S.D. Fla. 1951), *aff'd.*, 207 F.2d 173, 98 USPQ 205 (5th Cir. 1953), *cert. denied*, 346 U.S. 897, 99 USPQ 490 (1953); contra, *Watson v. Allen*, 254 F.2d 342, 117 USPQ 68 (D.C.Cir. 1957). In other words, the experimental use activity exception is personal to an applicant.

2134 35 U.S.C. 102(c)

35 U.S.C. 102. Conditions for patentability; novelty and loss of right to patent.

A person shall be entitled to a patent unless -

*****

(c) he has abandoned the invention.

*****

UNDER 35 U.S.C. 102(c), AN ABANDONMENT MUST BE INTENTIONAL

"Actual abandonment under 35 U.S.C. 102(c) requires that the inventor intend to abandon the invention, and intent can be implied from the inventor's conduct with respect to the invention. *In re Gibbs*, 437 F.2d 486, 168 USPQ 578 (CCPA 1971). Such intent to abandon the invention will not be imputed, and every reasonable doubt should be resolved in favor of the inventor." *Ex parte Dunne*, 20 USPQ2d 1479 (Bd. Pat. App. & Inter. 1991).

DELAY IN MAKING FIRST APPLICATION

Abandonment under 35 U.S.C. 102(c) requires a deliberate, though not necessarily express, surrender of any rights to a patent. To abandon the invention the inventor must intend a dedication to the public. Such dedication may be either express or implied, by actions or inactions of the inventor. Delay alone is not sufficient to infer the requisite intent to abandon. *Moore v. United States*, 194 USPQ 423, 428 (Ct. Cl. 1977) (The drafting and retention in his own files of two patent applications by inventor indicates an intent to retain his invention; delay in filing the applications was not sufficient to establish abandonment); but see *Davis Harvester Co., Inc. v. Long Mfg. Co.*, 252 F. Supp. 989, 1009-10, 149 USPQ 420, 435-436 (E.D. N.C. 1966) (Where the inventor does nothing over a period of time to develop or patent his invention, ridicules the attempts of another to develop that invention and begins to show active interest in promoting and developing his invention only after successful marketing by another of a device embodying that invention, the inventor has abandoned his invention under 35 U.S.C. 102(c).).

DELAY IN REAPPLYING FOR PATENT AFTER ABANDONMENT OF PREVIOUS PATENT APPLICATION

Where there is no evidence of expressed intent or conduct by inventor to abandon his invention, delay in reapplying for patent after abandonment of a previous application does not constitute abandonment under 35 U.S.C. 102(c). *Petersen v. Fee Int'l, Ltd.*, 381 F. Supp. 1071, 182 USPQ 264 (W.D. Okla. 1974).

DISCLOSURE WITHOUT CLAIMING IN A PRIOR ISSUED PATENT

Any inference of abandonment (i.e., intent to dedicate to the public) of subject matter disclosed but not claimed in a previously issued patent is rebuttable by an application filed at any time before a statutory bar arises. Accordingly, a rejection of a claim of a patent application under 35 U.S.C. 102(c) predicated solely on the issuance of a patent which discloses the subject matter of the claim in the application without claim-

ing it would be improper, regardless of whether there is copendency between the application at issue and the application which issued as the patent. *In re Gibbs*, 437 F.2d 486, 168 USPQ 578 (CCPA 1971).

ONLY WHEN THERE IS A PRIORITY CONTEST CAN A LAPSE OF TIME BAR A PATENT

The mere lapse of time will not bar a patent. The only exception is when there is a priority contest under 35 U.S.C. 102(g) and applicant abandons, suppresses or conceals the invention. *Panduit Corp. v. Dennison Mfg. Co.*, 774 F.2d 1082, 1101, 227 USPQ 337, 350 (Fed. Cir. 1985). Abandonment, suppression and concealment are treated by the courts under 35 U.S.S. 102(g). See MPEP § 2138.03 for more information on this issue.

2135 35 U.S.C. 102(d)

35 U.S.C. 102. Conditions for patentability; novelty and loss of right to patent.

A person shall be entitled to a patent unless -

*****

(d) the invention was first patented or caused to be patented, or was the subject of an inventor's certificate, by the applicant or his legal representatives or assigns in a foreign country prior to the date of the application for patent in this country on an application for patent or inventor's certificate filed more than twelve months before the filing of the application in the United States.

*****

GENERAL REQUIREMENTS OF 35 U.S.C. 102(d)

35 U.S.C. 102(d) establishes four conditions which, if all are present, establish a bar against the granting of a patent in this country:

(A) The foreign application must be filed more than 12 months before the effective U.S. filing date (See MPEP § 706.02 regarding effective U.S. filing date of an application);

(B) The foreign application must have been filed by the same applicant as in the United States or by his or her legal representatives or assigns.

(C) The foreign patent or inventor's certificate must be actually granted (e.g., by sealing of the papers in Great Britain) before the U.S. filing date. It need not be published.

(D) The same invention must be involved.

If such a foreign patent or inventor's certificate is discovered by the examiner, the rejection is made under 35 U.S.C. 102(d) on the ground of statutory bar. See MPEP § 2135.01 for further clarification of each of the four requirements of 35 U.S.C. 102(d).

2135.01 The Four Requirements of 35 U.S.C. 102(d)

I. FOREIGN APPLICATION MUST BE FILED MORE THAN 12 MONTHS BEFORE THE EFFECTIVE U.S. FILING DATE

A. An Anniversary Date Ending on a Weekend or Holiday Results in an Extension to the Next Business Day

The U.S. application is filed in time to prevent a 35 U.S.C. 102(d) bar from arising if it is filed on the 1 year anniversary date of the filing date of the foreign application. If this day is a Saturday, Sunday or Federal holiday, the year would be extended to the following business day. See *Ex parte Olah*, 131 USPQ 41 (Bd. App. 1960.) Despite changes to 37 CFR 1.6(a)(2) and 1.10, which require the PTO to accord a filing date to an application as of the date of deposit as "Express Mail" with the U.S. Postal Service in accordance with 37 CFR 1.10 (e.g., a Saturday filing date), the rule changes do not affect applicant's concurrent right to defer the filing of an application until the next business day when the last day for "taking any action" falls on a Saturday, Sunday, or a Federal holiday (e.g., the last day of the 1-year grace period falls on a Saturday).

B. A Continuation-in-Part Breaks the Chain of Priority as to Foreign as Well as U.S. Parents

In the case where applicant files a foreign application, later files a U.S. application claiming priority based on the foreign application, and then files a continuation-in-part (CIP) application whose claims are not entitled to the filing date of the U.S. parent, the effective filing date is the filing date of the CIP and applicant cannot obtain the benefit of either the U.S. parent or foreign application filing dates. *In re Van Langenhoven*, 458 F.2d 132, 137, 173 USPQ 426, 429 (CCPA 1972). If the foreign application issues into a

patent before the filing date of the CIP, it may be used in a 35 U.S.C. 102(d)/103 rejection if the subject matter added to the CIP does not render the claims nonobvious over the foreign patent. *Ex parte Appeal No. 242-47*, 196 USPQ 828 (Bd. App. 1976) (Foreign patent can be combined with other prior art to bar a U.S. patent in an obviousness rejection based on 35 U.S.C. 102(d)/103).

II. FOREIGN APPLICATION MUST HAVE BEEN FILED BY SAME APPLICANT, HIS OR HER LEGAL REPRESENTATIVE OR ASSIGNS

Note that where the U.S. application was made by two or more inventors, it is permissible for these inventors to claim priority from separate applications, each to one of the inventors or a subcombination of inventors. For instance, a U.S. application naming inventors A and B may be entitled to priority from one application to A and one to B filed in a foreign country.

III. THE FOREIGN PATENT OR INVENTOR'S CERTIFICATE WAS ACTUALLY GRANTED BEFORE THE U.S. FILING DATE

A. To Be "Patented" an Exclusionary Right Must Be Awarded to the Applicant

"Patented" means "a formal bestowal of patent rights from the sovereign to the applicant." *In re Monks*, 588 F.2d 308, 310, 200 USPQ 129, 131 (CCPA 1978); *American Infra-Red Radiant Co. v. Lambert Indus.*, 360 F.2d 977, 149 USPQ 722 (8th Cir.), *cert. denied*, 385 U.S. 920 (1966) (German Gebrauchsmuster petty patent was held to be a patent usable in a 35 U.S.C. 102(d) rejection. Gebrauchmustern are not examined and only grant a 6-year patent term. However, except as to duration, the exclusionary patent right granted is as extensive as in the U.S.).

B. A Published Application Is Not a "Patent"

An application must issue into a patent before it can be applied in a 35 U.S.C. 102(d) rejection. *Ex parte Fujishiro*, 199 USPQ 36 (Bd. App. 1977) ("Patenting," within the meaning of 35 U.S.C. 102(d), does not occur upon laying open of a Japanese utility model application (kokai or kohyo)); *Ex parte Links*, 184 USPQ 429 (Bd. App. 1974) (German applications, which have not yet been published for opposition, are published in the form of printed documents called Offenlegungsschriften 18 months after filing. These applications are unexamined or in the process of being examined at the time of publication. The Board held that an Offenlegungsschrift is not a patent under 35 U.S.C. 102(d) even though some provisional rights are granted. The Board explained that the provisional rights are minimal and do not come into force if the application is withdrawn or refused.).

C. An Allowed Application Can Be a "Patent" for Purposes of 35 U.S.C. 102(d) as of the Date Published for Opposition Even Though It Has Not Yet Been Granted as a Patent

An examined application which has been allowed by the examiner and published to allow the public to oppose the grant of a patent has been held to be a "patent" for purposes of rejection under 35 U.S.C. 102(d) as of the date of publication for opposition if substantial provisional enforcement rights arise. *Ex parte Beik*, 161 USPQ 795 (Bd. App. 1968) (This case dealt with examined German applications. After a determination that an application is allowable, the application is published in the form of a printed document called an Auslegeschrift. The publication begins a period of opposition were the public can present evidence showing unpatentability. Provisional patent rights are granted which are substantially the same as those available once the opposition period is over and the patent is granted. The Board found that an Auslegeschrift provides the legal effect of a patent for purposes of rejection under 35 U.S.C. 102(d).).

D. Grant Occurs When Patent Becomes Enforceable

The critical date of a foreign patent as a reference under 35 U.S.C. 102(d) is the date the patent becomes enforceable (issued, sealed or granted). *In re Monks*, 588 F.2d 308, 310, 200 USPQ 129, 131 (CCPA 1978) (British reference became available as prior art on date the patent was "sealed" because as of this date applicant had the right to exclude others from making, using or selling the claimed invention.).

E. 35 U.S.C. 102(d) Applies as of Grant Date Even If There Is a Period of Secrecy After Patent Grant

A period of secrecy after granting the patent, as in Belgium and Spain, has been held to have no effect in connection with 35 U.S.C. 102(d). These patents are usable in rejections under 35 U.S.C. 102(d) as of the date patent rights are granted. *In re Kathawala*, 9 F.3d 942, 28 USPQ2d 1789 (Fed. Cir. 1993) (An invention is "patented" for purposes of 35 U.S.C. 102(d) when the patentee's rights under the patent become fixed. The fact that applicant's Spanish application was not published until after the U.S. filing date is immaterial since the Spanish patent was granted before U.S. filing.); *Gramme Elec. Co. v. Arnoux and Hochhausen Elec. Co.*, 17 F. 838, 1883 C.D. 418 (S.D.N.Y. 1883) (Rejection made under a predecessor of 35 U.S.C. 102(d) based on an Austrian patent granted an exclusionary right for 1 year but was kept secret, at the option of the patentee, for that period. The court held that the Austrian patent grant date was the relevant date under the statute for purposes of 35 U.S.C. 102(d) but that the patent could not have been used to in a rejection under 35 U.S.C. 102(a) or (b).); *In re Talbott*, 443 F.2d 1397, 170 USPQ 281 (CCPA 1971) (Applicant cannot avoid a 35 U.S.C. 102(d) rejection by exercising an option to keep the subject matter of a German Gebrauchsmuster (petty patent) in secrecy until time of U.S. filing.).

IV. THE SAME INVENTION MUST BE INVOLVED

"Same Invention" Means That the Application Claims Could Have Been Presented in the Foreign Patent

Under 35 U.S.C. 102(d), the "invention... patented" in the foreign country must be the same as the invention sought to be patented in the U.S. When the foreign patent contains the same claims as the U.S. application, there is no question that "the invention was first patented... in a foreign country." *In re Kathawala*, 9 F.3d 942, 945, 28 USPQ2d 1785, 1787 (Fed. Cir. 1993). However, the claims need not be identical or even within the same statutory class. If applicant is granted a foreign patent which fully discloses the invention and which gives applicant a number of different claiming options in the U.S., the reference in 35 U.S.C. 102(d) to " 'invention... patented' necessarily includes all the disclosed aspects of the invention. Thus, the section 102(d) bar applies regardless whether the foreign patent contains claims to less than all aspects of the invention." 9 F.3d at 946, 28 USPQ2d at 1788. In essence, a 35 U.S.C. 102(d) rejection applies if applicant's foreign application supports the subject matter of the U.S. claims. *In re Kathawala*, 9 F.3d 942, 28 USPQ2d 1785 (Fed. Cir. 1993) (Applicant was granted a Spanish patent claiming a method of making a composition. The patent disclosed compounds, methods of use and processes of making the compounds. After the Spanish patent was granted, the applicant filed a U.S. application with claims directed to the compound but not the process of making it. The Federal Circuit held that it did not matter that the claims in the U.S. application were directed to the composition instead of the process because the foreign specification would have supported claims to the composition. It was immaterial that the formulations were unpatentable pharmaceutical compositions in Spain.).

2136 35 U.S.C. 102(e)

When examining any application filed on or after November 29, 2000 or any application which has been voluntarily published (PG-PUB application), the application is subject to the current version of 35 U.S.C. 102 (e) set forth below.

35 U.S.C. 102. Conditions for patentability; novelty and loss of right to patent.

A person shall be entitled to a patent unless-

*****

(e) the invention was described in—

(1) an application for patent, published under section 122(b), by another filed in the United States before the invention by the applicant for patent, except that an international application filed under the treaty defined in section 351(a) shall have the effect under this subsection of a national application published under section 122(b) only if the international application designating the United States was published under Article 21(2)(a) of such treaty in the English language; or

(2) a patent granted on an application for patent by another filed in the United States before the invention by the applicant for patent, except that a patent shall not be deemed filed in the United States for the purposes of this subsection based on the filing of an international application filed under the treaty defined in section 351(a); or

*****

When examining any application filed prior to November 29, 2000 which has not been voluntarily published (pre PG-PUB application), the application is subject to the former version of 35 U.S.C. 102(e) set forth below.

Former 35 U.S.C. 102. Conditions for patentability; novelty and loss of right to patent.

A person shall be entitled to a patent unless-

*****

(e) the invention was described in a patent granted on an application for patent by another filed in the United States before the invention thereof by the applicant for patent, or on an international application by another who has fulfilled the requirements of paragraphs (1), (2), and (4) of section 371(c) of this title before the invention thereof by the applicant for patent.

*****

WHEN EXAMINING PRE PG-PUB APPLI-CATIONS, ONLY U.S. PATENTS AND SIRS ARE ELIGIBLE AS PRIOR ART UNDER 35 U.S.C. 102(e)

The reference must be a U.S. patent or Statutory Invention Registration (SIR) to be eligible for use in a 35 U.S.C. 102(e) rejection. See, e.g., *Ex parte Smolka*, 207 USPQ 232 (Bd. App. 1980) (A foreign patent document with priority back to an abandoned U.S. application cannot be the basis for a 35 U.S.C. 102(e) rejection. The foreign document cannot be prior art until it is patented or published.). U.S. patents and SIRs can be used in 35 U.S.C. 102(e) rejections as of their filing dates.

WHEN EXAMINING PG-PUB APPLICATIONS ONLY U.S. PATENTS, U.S. APPLICATION PUBLICATIONS, CERTAIN INTERNATIONAL APPLICATION PUBLICATIONS AND SIRS ARE ELIGIBLE AS PRIOR ART UNDER 35 U.S.C. 102(e)

When examining PG-PUB applications, in addition to U.S. patents and SIRs, U.S. application publications and certain international application publications are also available as prior art under 35 U.S.C. 102(e) as of their filing dates.

DEFENSIVE PUBLICATIONS ARE NOT PRIOR ART AS OF THEIR FILING DATE

The Defensive Publication Program, available between April 1968 and May 1985, provided for the voluntary publication of the abstract of the technical disclosure of a pending application under certain conditions. A defensive publication is not a patent or an application publication under 35 U.S.C. 122(b); it is a publication. Therefore, it is prior art only as of its publication date. *Ex parte Osmond*, 191 USPQ 334 (Bd. App. 1973). See MPEP § 711.06(a) for more information on Defensive Publications.

2136.01 Status of U.S. Application as a Reference

WHEN EXAMINING PRE PG-PUB APPLICATIONS, WHEN THERE IS NO COMMON ASSIGNEE OR INVENTOR, A U.S. APPLICATION MUST ISSUE AS A PATENT OR BE PUBLISHED AS A SIR BEFORE IT IS AVAILABLE AS PRIOR ART UNDER 35 U.S.C. 102(e)

When examining a pre PG-PUB application (see MPEP § 2136), a U.S. patent must issue, or a SIR must be published, before it can be used as a reference in a 35 U.S.C. 102(e) rejection. *Ex parte Smolka*, 207 USPQ 232 (Bd. App. 1980) (An application to Smolka and Schwuger was rejected over 35 U.S.C. 102(e) based on a pending U.S. application to Corkill whose filing date antedated the Smolka *et al.* application. A German application corresponding to the Corkill application had been published, but did not antedate the effective filing date of the Smolka *et al.* application. The Board reversed the rejection holding that a U.S. patent had to be issued to Corkill before it could become available as prior art under 35 U.S.C. 102(e). There was no common assignee nor any common inventor between the two applications.).

WHEN EXAMINING POST PG-PUB APPLICATIONS, WHEN THERE IS NO COMMON ASSIGNEE OR INVENTOR, A U.S. APPLICATION MUST ISSUE AS A PATENT OR BE PUBLISHED AS A SIR OR AS AN APPLICATION PUBLICATION BEFORE IT IS AVAILABLE AS PRIOR ART UNDER 35 U.S.C. 102(e)

When examining a PG-PUB application (see MPEP § 2136), in addition to U.S. patents and SIRs, U.S. application publications and certain international application publications are also available as prior art under 35 U.S.C. 102(e) as of their filing dates.

WHEN THERE IS A COMMON ASSIGNEE OR INVENTOR, A PROVISIONAL 35 U.S.C. 102(e) REJECTION OVER AN EARLIER FILED UNPUBLISHED APPLICATION CAN BE MADE

Based on the assumption that an application will ripen into a U.S. patent (or into an application publication when examining a PG-PUB application), it is permissible to provisionally reject a later application over an earlier application under 35 U.S.C. 102(e). *In re Irish*, 433 F.2d 1342, 167 USPQ 764 (CCPA 1970). Such a provisional rejection "serves to put applicant on notice at the earliest possible time of the possible prior art relationship between copending applications" and gives applicant the fullest opportunity to overcome the rejection by amendment or submission of evidence. In addition, since both applications are pending and usually have the same assignee, more options are available to applicant for overcoming the provisional rejection than if the other application were already issued. *Ex parte Bartfeld*, 16 USPQ2d 1714 (Bd. Pat. App. & Int. 1990) *aff'd on other grounds*, 925 F.2d 1450, 17 USPQ2d 1885 (Fed. Cir. 1991). Note that provisional rejections over 35 U.S.C. 102(e) are only authorized when there is a common inventor or assignee, otherwise the copending application prior to publication must remain confidential. MPEP § 706.02(f) and § 706.02(k) discuss the procedures to be used in provisional rejections over 35 U.S.C. 102(e) and 102(e)/103.

For applications filed on or after November 29, 1999, a provisional rejection under 35 U.S.C. 102(e)/103 is not proper if the application contains evidence that the application and the prior art reference were owned by the same person, or subject to an obligation of assignment to the same person, at the time the invention was made. See MPEP § 706.02(l)(1) through § 706.02(l)(3) for information relating to rejections under 35 U.S.C. 102(e)/103 and evidence of common ownership.

2136.02 Content of the Prior Art Available Against the Claims

A 35 U.S.C. 102(e) REJECTION MAY RELY ON ANY PART OF THE PATENT OR APPLICATION PUBLICATION DISCLOSURE

Under 35 U.S.C. 102(e), the entire disclosure of a U.S. patent, or an application publication when examining a PG-PUB application (see MPEP § 2136), having an earlier filing date can be relied on to reject the claims. *Sun Studs, Inc. v. ATA Equip. Leasing, Inc.*, 872 F.2d 978, 983, 10 USPQ2d 1338, 1342 (Fed. Cir. 1989).

U.S. REFERENCE MUST ITSELF CONTAIN THE SUBJECT MATTER RELIED ON IN THE REJECTION

When a U.S. patent, or an application publication when examining a PG-PUB application (see MPEP § 2136), is used to reject claims under 35 U.S.C. 102(e), the disclosure relied on in the rejection must be present in the issued patent or application publication. It is the filing date of the U.S. patent or application publication being relied on as the critical reference date and subject matter not included in the patent or application publication itself can only be used when that subject matter becomes public. Portions of the patent application which were canceled are not part of the patent or application publication and thus cannot be relied on in a 35 U.S.C. 102(e) rejection over the issued patent or application publication. *Ex parte Stalego*, 154 USPQ 52 (Bd. App. 1966). Likewise, subject matter which is disclosed in a parent application, but not included in the child continuation-in-part (CIP) cannot be relied on in a 35 U.S.C. 102(e) rejection over the issued or published CIP. *In re Lund*, 376 F.2d 982, 153 USPQ 625 (CCPA 1967) (The examiner made a 35 U.S.C. 102(e) rejection over an issued U.S. patent which was a continuation-in-part (CIP). The parent application of the U.S. patent reference contained an example II which was not carried over to the CIP. The court held that the subject matter embodied in the canceled example II could not be relied on as of either parent or child filing date. Thus, the use of example II subject matter to reject the claims under 35 U.S.C. 102(e) was improper.).

THE SUPREME COURT HAS AUTHORIZED 35 U.S.C. 103 REJECTIONS BASED ON 35 U.S.C. 102(e)

U.S. patents may be used as of their filing dates to show that the claimed subject matter is anticipated or obvious. Obviousness can be shown by combining other prior art with the U.S. patent reference in a 35 U.S.C. 103 rejection. *Hazeltine Research v. Brenner*, 382 U.S. 252, 147 USPQ 429 (1965). Similarly,

when examining a PG-PUB application (see MPEP § 2136), U.S. application publications and certain international application publications may also be used as of their filing dates to show that the claimed subject matter would have been anticipated or obvious.

For applications filed on or after November 29, 1999, if the applicant provides evidence that the application and prior art reference were owned by the same person, or subject to an obligation of assignment to the same person, at the time the invention was made, any rejections under 35 U.S.C. 102(e)/103 based upon such a commonly owned reference should not be made or maintained. See MPEP § 706.02(l)(1) - § 706.02(l)(3) for additional information on rejections under 35 U.S.C. 102(e)/103 and evidence of common ownership.

2136.03 Critical Reference Date

I. FOREIGN PRIORITY DATE

Reference's Foreign Priority Date Under 35 U.S.C. 119(a)-(d) and (f) Cannot Be Used as the 35 U.S.C. 102(e) Reference Date

A U.S. patent reference is effective prior art as of its U.S. filing date. 35 U.S.C. 119(a)-(d) and (f) does not modify section 102(e) which is explicitly limited to certain references "filed in the United States before the invention thereof by the applicant" (emphasis added). Therefore, the foreign priority date of the reference under 35 U.S.C. 119(a)-(d) and (f) cannot be used to antedate the application filing date. In contrast, applicant may be able to overcome the 35 U.S.C. 102(e) rejection by proving he or she is entitled to his or her own 35 U.S.C. 119 priority date which is earlier than the reference's U.S. filing date. *In re Hilmer*, 359 F.2d 859, 149 USPQ 480 (CCPA 1966) (*Hilmer I*) (Applicant filed an application with a right of priority to a German application. The examiner rejected the claims over a U.S. patent to Habicht based on its Swiss priority date. The U.S. filing date of Habicht was later than the application's German priority date. The court held that the reference's Swiss priority date could not be relied on in a 35 U.S.C. 102(e) rejection. Because the U.S. filing date of Habicht was later than the earliest effective filing date (German priority date) of the application, the rejection was reversed.). See MPEP § 201.15 for information on procedures to be followed in considering applicant's right of priority.

Note that certain international application (PCT) filings are considered to be "filings in the United States" for purposes of applying an application publication as prior art when examining PG-PUB applications (see MPEP § 2136).

II. CONTINUATION OF AN INTERNATIONAL (PCT) APPLICATION; INTERNATIONAL APPLICATION PUBLICATION

A patent issued from a U.S. application filed under 35 U.S.C. 111(a) that claims the benefit of the filing date of a copending PCT international application under 35 U.S.C. 120, has as its effective date as a reference under 35 U.S.C. 102(e) the U.S. filing date of the 35 U.S.C. 111(a) application and not the international filing date. This is true whether the application being examined is a pre PG-PUB application or a PG-PUB application (see MPEP § 2136). When examining a pre PG-PUB application, when a U.S. national stage application filed under 35 U.S.C. 371 becomes a U.S. patent, the 35 U.S.C. 102(e) date of the U.S. Patent as a prior art reference is the date applicant fulfilled the requirements of 35 U.S.C. 371(c)(1), (c)(2), and (c)(4). See MPEP § 715 and § 1896.

If an application publication under 35 U.S.C. 122(b) (a U.S. application publication) claims the benefit of the international filing date of an international application (PCT application), the U.S. application publication is available as prior art under 35 U.S.C. 102(e) as of the international filing date (when examining PG-PUB applications), only if the international application designated the United States, and the international application was published under PCT Article 21(2)(a) in English. PCT Article 21(2)(a) requires that publication be effected promptly after expiration of 18 months from the priority date of the application. Where a U.S. application publication is available as prior art as of an earlier international application's filing date, the international application should be treated as if it was an application for patent in the United States when analyzing the prior art effect of the application publication.

Where the national stage of an international application is published under 35 U.S.C. 122(b)as an application publication, but the international application

was not published in English pursuant to PCT Article 21(2)(a), then the U.S. application publication would have no prior art date under 35 U.S.C. 102(e).

Note that when examining a PG-PUB application, any **patent** issued from a national stage application would have no prior art date under 35 U.S.C. 102(e).

International application publications may also be applied as prior art as of their international filing dates when examining PG-PUB applications, but only if the international application designated the United States, the international application was published under PCT Article 21(2)(a)in English, the international application was filed on or after November 29, 2000 and the international application entered the national stage as to the United States.

III. PRIORITY FROM PROVISIONAL APPLICATION UNDER 35 U.S.C. 119(e)

The 35 U.S.C. 102(e) critical reference date of a U.S. patent or U.S. application publications and certain international application publications when examining PG-PUB applications, entitled to the benefit of the filing date of a provisional application under 35 U.S.C. 119(e) is the filing date of the provisional application with certain exceptions.

When examining pre PG-PUB applications, by the terms of 35 U.S.C. 102(e), the critical reference date of a U.S. patent granted on an international (PCT) application in which the requirements of paragraphs (1), (2) and (4) of 35 U.S.C. 371(c) have been fulfilled is the date on which paragraphs (c)(1), (c)(2) and (c)(4) of 35 U.S.C. 371 were fulfilled, not the filing date of the provisional application. When examining a PG-PUB application, a U.S. patent granted on such a 35 U.S.C. 371 application has no reference date under 35 U.S.C. 102(e). When examining a PG-PUB application, the reference date of a U.S. application publication resulting from such a 35 U.S.C. 371 application entitled to the benefit of the filing date of the provisional application is the filing date of the provisional application under 35 U.S.C. 119(e) only if the international application was published in English pursuant to PCT Article 21(2)(a).

Similarly, when examining a PG-PUB application, the reference date of an international application publication entitled to the filing date of a provisional application will be the filing date of the provisional application only if the international application designated the United States, the international application was published under PCT Article 21(2)(a) in English, the international application was filed on or after November 29, 2000 and the international application entered the national stage as to the United States.

IV. PARENT'S FILING DATE WHEN REFERENCE IS A CONTINUATION-IN-PART OF THE PARENT

Filing Date of U.S. Parent Application Can Only Be Used as the 35 U.S.C. 102(e) Date If It Supports the Claims of the Issued Child

In order to carry back the 35 U.S.C. 102(e) critical date of the U.S. patent reference to the filing date of a parent application, the parent application must (A) have a right of priority to the earlier date under 35 U.S.C. 120 and (B) support the invention claimed as required by 35 U.S.C. 112, first paragraph. "For if a patent could not theoretically have issued the day the application was filed, it is not entitled to be used against another as 'secret prior art' " under 35 U.S.C. 102(e). *In re Wertheim*, 646 F.2d 527, 537, 209 USPQ 554, 564 (CCPA 1981) (The examiner made a 35 U.S.C. 103 rejection over a U.S. patent to Pfluger. The Pfluger patent (Pfluger IV) was the child of a string of abandoned parent applications (Pfluger I, the first application, Pfluger II and III, both CIPs). Pfluger IV was a continuation of Pfluger III. The court characterized the contents of the applications as follows: Pfluger I - subject matter A, II-AB, III-ABC, IV-ABC. ABC anticipated the claims of the examined application, but the filing date of III was later than the application filing date. So the examiner reached back to "A" in Pfluger I and combined this disclosure with another reference to establish obviousness. The court held that the examiner impermissibly carried over "A" and should have instead determined which of the parent applications contained the subject matter which made Pfluger patentable. Only if B and C were not claimed, or at least not critical to the patentability of Pfluger IV, could the filing date of Pfluger I be used. The court reversed the rejection based on a determination that Pfluger IV was only entitled to the Pfluger III filing date. The added new matter (C) was critical to the claims of the issued patent.). Note that *In re Wertheim* modified the holding of *In re Lund*, 376 F.2d

982, 153 USPQ 625 (CCPA 1967) as to "carrying back" the subject matter to the parent applications.

See also *Ex parte Gilderdale*, 1990 Pat. App. LEXIS 25 (Bd. Pat. App. & Inter. Appeal no. 89-0352) (The examiner made a 35 U.S.C. 102(e) rejection over a U.S. patent to Hernandez. Hernandez was a continuation of a continuation-in-part. Both the parent and grandparent had been abandoned. The parent listed a different inventive entity but supported the subject matter of the child's claims. The parent was filed on the same day as the examined application and thus no 35 U.S.C. 102(e) rejection could be made based on the parent's filing date. The Board reversed the rejection, explaining that the Hernandez patent was entitled to the filing date of its parent, as the parent supported the patent claims and 35 U.S.C. 120 was satisfied. Under 35 U.S.C. 120, an application can claim the benefit of an earlier filing date even if not all inventors are the same. However, Hernandez was not entitled to the grandparent filing date because the parent and child applications contained new matter as compared to the grandparent.).

Compare *Ex parte Ebata*, 19 USPQ2d 1952 (Bd. Pat. App. & Inter. 1991) (The claims were directed to a method of administering a salt of lysocellin to animals. A 35 U.S.C. 102(e) rejection was made over Martin. Martin was a continuation of an application which was in turn a continuation-in-part of an abandoned application. The grandparent application disclosed administering a manganese complex of lysocellin to animals. The Board found that "the new matter relates to additional forms of lysocellin which are useful in Martin's process, i.e., species or embodiments other than the manganese complex. This is far different from adding limitations which are required or necessary for patentability." Unlike the situation in *In re Wertheim*, Martin's invention was patentable as presented in the grandparent application.).

Similarly, when examining PG-PUB applications, in order to carry back the 35 U.S.C. 102(e)critical date of the U.S. patent application publication reference, or those international application publications usable as a reference under 35 U.S.C. 102(e), to the filing date of a parent application, the application must (A) have a right of priority to the earlier date under 35 U.S.C. 120or 365(c), and (B) support the invention claimed as required by 35 U.S.C. 112, first paragraph.

V. DATE OF CONCEPTION OR REDUCTION TO PRACTICE

35 U.S.C. 102(e) Reference Date Is the Filing Date Not Date of Inventor's Conception or Reduction to Practice

If a reference available under 35 U.S.C. 102(e) discloses, but does not claim the subject matter of the claims being examined or an obvious variant, the reference is not prior art under 35 U.S.C. 102(g). When the cases are not in interference, the effective date of the reference as prior art is its filing date in the United States, as stated in 35 U.S.C. 102(e). The date that the prior art subject matter was conceived or reduced to practice is of no importance when 35 U.S.C. 102(g) is not at issue. *Sun Studs, Inc. v. ATA Equip. Leasing, Inc.*, 872 F.2d 978, 983, 10 USPQ2d 1338, 1342 (Fed. Cir. 1989) (The defendant sought to invalidate patents issued to Mason and Sohn assigned to Sun Studs. The earliest of these patents issued in June 1973. A U.S. patent to Mouat was found which issued in March 1976 and which disclosed the invention of Mason and Sohn. While the patent to Mouat issued after the Mason and Sohn patents, it was filed 7 months earlier than the earliest of the Mason and Sohn patents. Sun Studs submitted affidavits showing conception in 1969 and diligence to the constructive reduction to practice and therefore antedated the patent to Mouat. The defendant sought to show that Mouat conceived the invention in 1966. The court held that conception of the subject matter of the reference only becomes an issue when the claims of the conflicting patents cover inventions which are the same or obvious over one another. When 35 U.S.C. 102(e) applies but not 35 U.S.C. 102(g), the filing date of the prior art patent is the earliest date that can be used to reject or invalidate claims.).

2136.04 Different Inventive Entity; Meaning of "By Another"

IF THERE IS ANY DIFFERENCE IN THE INVENTIVE ENTITY, THE REFERENCE IS "BY ANOTHER"

"Another" means other than applicants, *In re Land*, 368 F.2d 866, 151 USPQ 621 (CCPA 1966), in other words, a different inventive entity. The inventive entity is different if not all inventors are the same. The

fact that the application and reference have one or more inventors in common is immaterial. *Ex parte DesOrmeaux*, 25 USPQ2d 2040 (Bd. Pat. App. & Inter. 1992) (The examiner made a 35 U.S.C. 102(e) rejection based on an issued U.S. patent to three inventors. The rejected application was a continuation-in-part of the issued parent with an extra inventor. The Board found that the patent was "by another" and thus could be used in a 35 U.S.C. 102(e)/103 rejection of the application.).

A DIFFERENT INVENTIVE ENTITY IS *PRIMA FACIE* EVIDENCE THAT THE REFERENCE IS "BY ANOTHER"

As stated by the House and Senate reports on the bills enacting section 35 U.S.C. 102(e) as part of the 1952 Patent Act, this subsection of 102 codifies the Milburn rule of *Milburn v. Davis-Bournonville*, 270 U.S. 390 (1926). The Milburn rule authorized the use of a U.S. patent containing a disclosure of the invention as a reference against a later filed application as of the U.S. patent filing date. The existence of an earlier filed U.S. application containing the subject matter claimed in the application being examined indicates that applicant was not the first inventor. Therefore, a U.S. patent, or when examining PG-PUB applications (see MPEP § 2136) a U.S. patent application publication or international application publication, by a different inventive entity, whether or not the application shares some inventors in common with the patent, is *prima facie* evidence that the invention was made "by another" as set forth in section 102(e). *In re Mathews*, 408 F.2d 1393, 161 USPQ 276 (CCPA 1969); *In re Facius*, 408 F.2d 1396, 161 USPQ 294 (CCPA 1969); *Ex parte DesOrmeaux*, 25 USPQ2d 2040 (Bd. Pat. App. & Inter. 1992). See MPEP § 2136.05 for discussion of methods of overcoming 102(e) rejections.

2136.05 Overcoming a Rejection Under 35 U.S.C. 102(e)

A 35 U.S.C. 102(e) REJECTION CAN BE OVERCOME BY ANTEDATING THE FILING DATE OR SHOWING THAT DISCLOSURE RELIED ON IS APPLICANT'S OWN WORK

When a prior U.S. patent, or when examining PG-PUB applications (see MPEP § 2136), a prior U.S. patent application publication or international application publication, is not a statutory bar, a 35 U.S.C. 102(e) rejection can be overcome by antedating the filing date (see MPEP § 2136.03 regarding critical reference date of 35 U.S.C. 102(e) prior art) of the reference by submitting an affidavit or declaration under 37 CFR 1.131 or by submitting an affidavit or declaration under 37 CFR 1.132 establishing that the relevant disclosure is applicant's own work. *In re Mathews*, 408 F.2d 1393, 161 USPQ 276 (CCPA 1969). The filing date can also be antedated by applicant's earlier foreign priority application or provisional application if 35 U.S.C. 119 is met and the foreign application or provisional application "supports" (conforms to 35 U.S.C. 112, first paragraph, requirements) all the claims of the U.S. application. *In re Gosteli*, 872 F.2d 1008, 10 USPQ2d 1614 (Fed. Cir. 1989). But a prior application which was not copending with the application at issue cannot be used to antedate a reference. *In re Costello*, 717 F.2d 1346, 219 USPQ 389 (Fed. Cir. 1983). A terminal disclaimer also does not overcome a 35 U.S.C. 102(e) rejection. See, e.g., *In re Bartfeld*, 925 F.2d 1415, 17 USPQ2d 1885 (Fed. Cir. 1991).

See MPEP § 706.02(b) for a list of methods which can be used to overcome rejections based on 35 U.S.C. 102(e) rejections. For information on the required contents of a 37 CFR 1.131 affidavit or declaration and the situations in which such affidavits and declarations are permitted see MPEP § 715. An affidavit or declaration is not appropriate if the reference describes applicant's own work. In this case, applicant must submit an affidavit or declaration under 37 CFR 1.132. See the next paragraph for more information concerning the requirements of 37 CFR 1.132 affidavits and declarations.

A 35 U.S.C. 102(e) REJECTION CAN BE OVERCOME BY SHOWING THE REFERENCE IS DESCRIBING APPLICANT'S OWN WORK

"The fact that an application has named a different inventive entity than a patent does not necessarily make that patent prior art." *Applied Materials Inc. v. Gemini Research Corp.*, 835 F.2d 279, 15 USPQ2d 1816 (Fed. Cir. 1988). The issue turns on what the evidence of record shows as to <u>who</u> invented the subject matter. *In re Whittle*, 454 F.2d 1193, 1195, 172 USPQ 535, 537 (CCPA 1972). In fact, even if

applicant's work was publicly disclosed prior to his or her application, applicant's own work may not be used against him or her unless there is a time bar under 35 U.S.C. 102(b). *In re DeBaun*, 687 F.2d 459, 214 USPQ 933 (CCPA 1982) (citing *In re Katz*, 687 F.2d 450, 215 USPQ 14 (CCPA 1982)). Therefore, when the unclaimed subject matter of a reference is applicant's own invention, applicant may overcome a *prima facie* case based on the patent, or when examining PG-PUB applications, a U.S. patent application publication or international application publication, by showing that the disclosure is a description of applicant's own previous work. Such a showing can be made by proving that the patentee, or when examining PG-PUB applications, the inventor(s) of the U.S. patent application publication or the international application publication, was associated with applicant (e.g. worked for the same company) and learned of applicant's invention from applicant. *In re Mathews*, 408 F.2d 1393, 161 USPQ 276 (CCPA 1969). In the situation where one application is first filed by inventor X and then a later application is filed by X&Y, it must be proven that the joint invention was made first, was thereafter described in the sole applicant's patent, or when examining PG-PUB applications, was thereafter described in the sole applicant's U.S. patent application publication or international application publication, and then the joint application was filed. *In re Land*, 368 F.2d 866, 151 USPQ 621 (CCPA 1966).

In *In re Land*, separate U.S. patents to Rogers and to Land were used to reject a joint application to Rogers and Land under 35 U.S.C. 102(e)/103. The inventors worked for the same company (Polaroid) and in the same laboratory. All the patents flowed from the same research. In addition, the patent applications were prepared by the same attorneys, were interrelated and contained cross-references to each other. The court affirmed the rejection because (1) the inventive entities of the patents (one to Rogers and one to Land) were different from the inventive entity of the joint application (Rogers and Land) and (2) Land and Rogers brought their knowledge of their individual work with them when they made the joint invention. There was no indication that the portions of the references relied on disclosed anything they did jointly. Neither was there any showing that what they did jointly was done before the filing of the reference patent applications.

See also *In re Carreira*, 532 F.2d 1356, 189 USPQ 461 (CCPA 1976) (The examiner rejected claims to a joint application to Carreira, Kyrakakis, Solodar, and Labana under 35 U.S.C. 102(e) and 103 in view of a U.S. patent issued to Tulagin and Carreira or a patent issued to Clark. The applicants submitted declarations under 37 CFR 1.132 by Tulagin and Clark in which each declarant stated he was "not the inventor of the use of compounds having a hydroxyl group in a position ortho to an azo linkage." The court held that these statements were vague and inconclusive because the declarants did not disclose the use of this generic compound but rather species of this generic compound in their patents and it was the species which met the claims. The declaration that each did not invent the use of the generic compound does not establish that Tulagin and Clark did not invent the use of the species.)

MPEP § 715.01(a), § 715.01(c), and § 716.10 set forth more information pertaining to the contents and uses of affidavits and declarations under 37 CFR 1.132 for antedating references. See MPEP § 706.02(l)(1) for information pertaining to rejections under 35 U.S.C. 102(e)/103 and the applicability of 35 U.S.C. 103(c).

APPLICANT NEED NOT SHOW DILIGENCE OR REDUCTION TO PRACTICE WHEN THE SUBJECT MATTER DISCLOSED IN THE REFERENCE IS APPLICANT'S OWN WORK

When the reference reflects applicant's own work, applicant need not prove diligence or reduction to practice to establish that he or she invented the subject matter disclosed in the reference. A showing that the reference disclosure arose from applicant's work coupled with a showing of conception by the applicant before the filing date of the reference will overcome the 35 U.S.C. 102(e) rejection. The showing can be made by submission of an affidavit by the inventor under 37 CFR 1.132. The other patentees need not submit an affidavit disclaiming inventorship, but, if submitted, a disclaimer by all other patentees should be considered by the examiner. *In re DeBaun*, 687 F.2d 459, 214 USPQ 933 (CCPA 1982) (Declaration submitted by DeBaun stated that he was the inventor of subject matter disclosed in the U.S. patent

reference of DeBaun and Noll. Exhibits were attached to the declaration showing conception and included drawings DeBaun had prepared and given to counsel for purposes of preparing the application which issued as the reference patent. The court held that, even though the evidence was not sufficient to antedate the prior art patent under 37 CFR 1.131, diligence and/or reduction to practice was not required to show DeBaun invented the subject matter. Declarant's statement that he conceived the invention first was enough to overcome the 35 U.S.C. 102(e) rejection.).

CLAIMING OF INDIVIDUAL ELEMENTS OR SUBCOMBINATIONS IN A COMBINATION CLAIM OF THE REFERENCE DOES NOT ITSELF ESTABLISH THAT THE PATENTEE INVENTED THOSE ELEMENTS

The existence of combination claims in a reference is not evidence that the patentee invented the individual elements or subcombinations included if the elements and subcombinations are not separately claimed apart from the combination. *In re DeBaun*, 687 F.2d 459, 214 USPQ 933 (CCPA 1982) (citing *In re Facius*, 408 F.2d 1396, 1406, 161 USPQ 294, 301 (CCPA 1969)).

See also *In re Mathews*, 408 F.2d 1393, 161 USPQ 276 (CCPA 1969) (On September 15, 1961, Dewey filed an application disclosing and claiming a time delay protective device for an electric circuit. In disclosing the invention, Dewey completely described, but did not claim, a "gating means 19" invented by Mathews which was usable in the protective device. Dewey and Mathews were coworkers at General Electric Company, the assignee. Mathews filed his application on March 7, 1963, before the Dewey patent issued but almost 18 months after its filing. The Mathews application disclosed that "one illustration of a circuit embodying the present invention is shown in copending patent application S.N. 138,476-Dewey." The examiner used Dewey to reject all the Mathews claims under 35 U.S.C. 102(e). In response, Mathews submitted an affidavit by Dewey under 37 CFR 1.132. In the affidavit, Dewey stated that he did not invent the gating means 19 but had learned of the gating means through Mathews and that GE attorneys had advised that the gating means be disclosed in Dewey's application to comply with 35 U.S.C. 112, first paragraph. The examiner argued that the only way to overcome a 35 U.S.C. 102(e) rejection was by submitting an affidavit or declaration under 37 CFR 1.131 to antedate the filing date of the reference. The court reversed the rejection, holding that the totality of the evidence on record showed that Dewey derived his knowledge from Mathews who is "the original, first and sole inventor.").

2137 35 U.S.C. 102(f)

35 U.S.C. 102. Conditions for patentability; novelty and loss of right to patent.

A person shall be entitled to a patent unless -

*****

(f) he did not himself invent the subject matter sought to be patented.

*****

Where it can be shown that an applicant "derived" an invention from another, a rejection under 35 U.S.C. 102(f) is proper. *Ex parte Kusko*, 215 USPQ 972, 974 (Bd. App. 1981) ("most, if not all, determinations under section 102(f) involve the question of whether one party derived an invention from another").

While derivation will bar the issuance of a patent to the deriver, a disclosure by the deriver, absent a bar under 35 U.S.C. 102(b), will not bar the issuance of a patent to the party from which the subject matter was derived. *In re Costello*, 717 F.2d 1346, 1349, 219 USPQ 389, 390-91 (Fed. Cir. 1983) ("[a] prior art reference that is not a statutory bar may be overcome by two generally recognized methods": an affidavit under 37 CFR 1.131, or an affidavit under 37 CFR 1.132 "showing that the relevant disclosure is a description of the applicant's own work"); *In re Facius*, 408 F.2d 1396, 1407, 161 USPQ 294, 302 (CCPA 1969) (subject matter incorporated into a patent that was brought to the attention of the patentee by applicant, and hence derived by the patentee from the applicant, is available for use against applicant unless applicant had actually invented the subject matter placed in the patent).

Where there is a published article identifying the authorship (MPEP § 715.01(c)) or a patent identifying the inventorship (MPEP § 715.01(a)) that discloses subject matter being claimed in an application undergoing examination, the designation of authorship or inventorship does not raise a presumption of inventorship with respect to the subject matter disclosed in the

article or with respect to the subject matter disclosed but not claimed in the patent so as to justify a rejection under 35 U.S.C. 102(f). However, it is incumbent upon the inventors named in the application, in reply to an inquiry regarding the appropriate inventorship under subsection (f), or to rebut a rejection under 35 U.S.C. 102(a) or (e), to provide a satisfactory showing by way of affidavit under 37 CFR 1.132 that the inventorship of the application is correct in that the reference discloses subject matter invented by the applicant rather than derived from the author or patentee notwithstanding the authorship of the article or the inventorship of the patent. *In re Katz*, 687 F.2d 450, 455, 215 USPQ 14, 18 (CCPA 1982) (inquiry is appropriate to clarify any ambiguity created by an article regarding inventorship, and it is then incumbent upon the applicant to provide "a satisfactory showing that would lead to a reasonable conclusion that [applicant] is the...inventor" of the subject matter disclosed in the article and claimed in the application).

DERIVATION REQUIRES COMPLETE CONCEPTION BY ANOTHER AND COMMUNICATION TO THE ALLEGED DERIVER

"The mere fact that a claim recites the use of various components, each of which can be argumentatively assumed to be old, does not provide a proper basis for a rejection under 35 U.S.C. 102(f)." *Ex parte Billottet*, 192 USPQ 413, 415 (Bd. App. 1976). Derivation requires complete conception by another and communication of that conception by any means to the party charged with derivation prior to any date on which it can be shown that the one charged with derivation possessed knowledge of the invention. *Kilbey v. Thiele*, 199 USPQ 290, 294 (Bd. Pat. Inter. 1978).

See also *Price v. Symsek*, 988 F.2d 1187, 1190, 26 USPQ2d 1031, 1033 (Fed. Cir. 1993); *Hedgewick v. Akers*, 497 F.2d 905, 908, 182 USPQ 167, 169 (CCPA 1974). "Communication of a complete conception must be sufficient to enable one of ordinary skill in the art to construct and successfully operate the invention." *Hedgewick*, 497 F.2d at 908, 182 USPQ at 169. See also *Gambro Lundia AB v. Baxter Healthcare Corp.*, 110 F.3d 1573, 1577, 42 USPQ2d 1378, 1383 (Fed. Cir. 1997) (Issue in proving derivation is "whether the communication enabled one of ordinary skill in the art to make the patented invention.").

PARTY ALLEGING DERIVATION DOES NOT HAVE TO PROVE AN ACTUAL REDUCTION TO PRACTICE, DERIVATION OF PUBLIC KNOWLEDGE, OR DERIVATION IN THIS COUNTRY

The party alleging derivation "need not prove an actual reduction to practice in order to show derivation." *Scott v. Brandenburger*, 216 USPQ 326, 327 (Bd. App. 1982). Furthermore, the application of subsection (f) is not limited to public knowledge derived from another, and "the site of derivation need not be in this country to bar a deriver from patenting the subject matter." *Ex parte Andresen*, 212 USPQ 100, 102 (Bd. App. 1981).

DERIVATION DISTINGUISHED FROM PRIORITY OF INVENTION

Although derivation and priority of invention both focus on inventorship, derivation addresses originality (i.e., who invented the subject matter), whereas priority focuses on which party first invented the subject matter. *Price v. Symsek*, 988 F.2d 1187, 1190, 26 USPQ2d 1031, 1033 (Fed. Cir. 1993).

35 U.S.C. 102(f) MAY APPLY WHERE 35 U.S.C. 102(a) AND 35 U.S.C. 102(e) ARE NOT AVAILABLE STATUTORY GROUNDS FOR REJECTION

35 U.S.C. 102(f) does not require an inquiry into the relative dates of a reference and the application, and therefore may be applicable where subsections (a) and (e) are not available for references having an effective date subsequent to the effective date of the application being examined. However for a reference having a date later than the date of the application some evidence may exist that the subject matter of the reference was derived from the applicant in view of the relative dates. *Ex parte Kusko*, 215 USPQ 972, 974 (Bd. App. 1981) (The relative dates of the events are important in determining derivation; a publication dated more than a year after applicant's filing date that merely lists as literary coauthors individuals other than applicant is not the strong evidence needed to rebut a declaration by the applicant that he is the sole inventor.).

2137.01 Inventorship

The requirement that the applicant for a patent be the inventor is a characteristic of U.S. patent law not generally shared by other countries. Consequently, foreign applicants may misunderstand U.S. law regarding naming of the actual inventors causing an error in the inventorship of a U.S. application that may claim priority to a previous foreign application under 35 U.S.C. 119. A request under 37 CFR 1.48(a) is required to correct any error in naming the inventors in the U.S. application as filed. MPEP § 201.03. Foreign applicants may need to be reminded of the requirement for identity of inventorship between a U.S. application and a 35 U.S.C. 119 priority application. MPEP § 201.13.

If a determination is made that the inventive entity named in a U.S. application is not correct, such as when a request under 37 CFR 1.48(a) is not granted or is not entered for technical reasons, but the admission therein regarding the error in inventorship is uncontroverted, a rejection under 35 U.S.C. 102(f) should be made.

EXECUTORS OF OATH OR DECLARATION UNDER 37 CFR 1.63 ARE PRESUMED TO BE THE INVENTORS

The party or parties executing an oath or declaration under 37 CFR 1.63 are presumed to be the inventors. *Driscoll v. Cebalo*, 5 USPQ2d 1477, 1481 (Bd. Pat. Inter. 1982); *In re DeBaun*, 687 F.2d 459, 463, 214 USPQ 933, 936 (CCPA 1982) (The inventor of an element, *per se*, and the inventor of that element as used in a combination may differ. "The existence of combination claims does not evidence inventorship by the patentee of the individual elements or subcombinations thereof if the latter are not separately claimed apart from the combination." (quoting *In re Facius*, 408 F.2d 1396, 1406, 161 USPQ 294, 301 (CCPA 1969) (emphasis in original)); *Brader v. Schaeffer*, 193 USPQ 627, 631 (Bd. Pat. Inter. 1976) (in regard to an inventorship correction: "[a]s between inventors their word is normally taken as to who are the actual inventors" when there is no disagreement).

AN INVENTOR MUST CONTRIBUTE TO THE CONCEPTION OF THE INVENTION

The definition for inventorship can be simply stated: "The threshold question in determining inventorship is who conceived the invention. Unless a person contributes to the conception of the invention, he is not an inventor. ... Insofar as defining an inventor is concerned, reduction to practice, *per se*, is irrelevant [except for simultaneous conception and reduction to practice, *Fiers v. Revel*, 984 F.2d 1164, 1168, 25 USPQ2d 1601, 1604-05 (Fed. Cir. 1993)]. One must contribute to the conception to be an inventor." *In re Hardee*, 223 USPQ 1122, 1123 (Comm'r Pat. 1984). See also *Ex parte Smernoff*, 215 USPQ 545, 547 (Bd. App. 1982) ("one who suggests an idea of a result to be accomplished, rather than the means of accomplishing it, is not an coinventor"). See MPEP § 2138.04 - § 2138.05 for a discussion of what evidence is required to establish conception or reduction to practice.

AS LONG AS THE INVENTOR MAINTAINS INTELLECTUAL DOMINATION OVER MAKING THE INVENTION, IDEAS, SUGGESTIONS, AND MATERIALS MAY BE ADOPTED FROM OTHERS

"In arriving at ... conception [the inventor] may consider and adopt ideas and materials derived from many sources ... [such as] a suggestion from an employee, or hired consultant ... so long as he maintains intellectual domination of the work of making the invention down to the successful testing, selecting or rejecting as he goes...even if such suggestion [or material] proves to be the key that unlocks his problem." *Morse v. Porter*, 155 USPQ 280, 283 (Bd. Pat. Inter. 1965). See also *New England Braiding Co. v. A.W. Chesterton Co.*, 970 F.2d 878, 883, 23 USPQ2d 1622, 1626 (Fed. Cir. 1992) (Adoption of the ideas and materials from another can become a derivation.).

THE INVENTOR IS NOT REQUIRED TO REDUCE THE INVENTION TO PRACTICE

Difficulties arise in separating members of a team effort, where each member of the team has contributed something, into those members that actually contributed to the conception of the invention, such as the physical structure or operative steps, from those mem-

bers that merely acted under the direction and supervision of the conceivers. *Fritsch v. Lin*, 21 USPQ2d 1737, 1739 (Bd. Pat. App. & Inter. 1991) (The inventor "took no part in developing the procedures...for expressing the EPO gene in mammalian host cells and isolating the resulting EPO product." However, "it is not essential for the inventor to be personally involved in carrying out process steps...where implementation of those steps does not require the exercise of inventive skill."); *In re DeBaun*, 687 F.2d 459, 463, 214 USPQ 933, 936 (CCPA 1982) ("there is no requirement that the inventor be the one to reduce the invention to practice so long as the reduction to practice was done on his behalf").

See also *Mattor v. Coolegem*, 530 F.2d 1391, 1395, 189 USPQ 201, 204 (CCPA 1976) (one following oral instructions is viewed as merely a technician); *Tucker v. Naito*, 188 USPQ 260, 263 (Bd. Pat. Inter. 1975) (inventors need not "personally construct and test their invention"); *Davis v. Carrier*, 81 F.2d 250, 252, 28 USPQ 227, 229 (CCPA 1936) (noninventor's work was merely that of a skilled mechanic carrying out the details of a plan devised by another).

REQUIREMENTS FOR JOINT INVENTORSHIP

The inventive entity for a particular application is based on some contribution to at least one of the claims made by each of the named inventors. "Inventors may apply for a patent jointly even though (1) they did not physically work together or at the same time, (2) each did not make the same type or amount of contribution, or (3) each did not make a contribution to the subject matter of every claim of the patent." 35 U.S.C. 116. "[T]he statute neither states nor implies that two inventors can be 'joint inventors' if they have had no contact whatsoever and are completely unaware of each other's work." What is required is some "quantum of collaboration or connection." In other words, "[f]or persons to be joint inventors under Section 116, there must be some element of joint behavior, such as collaboration or working under common direction, one inventor seeing a relevant report and building upon it or hearing another's suggestion at a meeting." *Kimberly-Clark Corp. v. Procter & Gamble Distrib. Co.*, 973 F.2d 911, 916-17, 23 USPQ2d 1921, 1925-26 (Fed. Cir. 1992); *Moler v. Purdy*, 131 USPQ 276, 279 (Bd. Pat. Inter. 1960) ("it is not necessary that the inventive concept come to both [joint inventors] at the same time").

Each joint inventor must generally contribute to the conception of the invention. A coinventor need not make a contribution to every claim of a patent. A contribution to one claim is enough. "The contributor of any disclosed means of a means-plus-function claim element is a joint inventor as to that claim, unless one asserting sole inventorship can show that the contribution of that means was simply a reduction to practice of the sole inventor's broader concept." *Ethicon Inc. v. United States Surgical Corp.*, 135 F.3d 1456, 1460-63, 45 USPQ2d 1545, 1548-1551 (Fed. Cir. 1998) (The electronics technician who contributed to one of the two alternative structures in the specification to define "the means for detaining" in a claim limitation was held to be a joint inventor.).

INVENTORSHIP IS GENERALLY "TO ANOTHER" WHERE THERE ARE DIFFERENT INVENTIVE ENTITIES WITH AT LEAST ONE INVENTOR IN COMMON

"[A] joint application or patent and a sole application or patent by one of the joint inventors are [by] different legal entities and accordingly, the issuance of the earlier filed application as a patent becomes a reference for everything it discloses" (*Ex parte Utschig*, 156 USPQ 156, 157 (Bd. App. 1966)) except where:

(A) the claimed invention in a later filed application is entitled to the benefit of an earlier filed application under 35 U.S.C. 120 (an overlap of inventors rather than an identical inventive entity is permissible). In this situation, a rejection under 35 U.S.C. 102(e) is precluded. See *Applied Materials Inc. v. Gemini Research Corp.*, 835 F.2d 279, 281, 15 USPQ2d 1816, 1818 (Fed. Cir. 1988) ("The fact that an application has named a different inventive entity than a patent does not necessarily make that patent prior art."); and

(B) the subject matter developed by another person and the claimed subject matter were, at the time the invention was made, owned by the same person or subject to an obligation of assignment to the same person. In this situation, a rejection under 35 U.S.C. 102(f)/103 or 102(g)/103, or 102(e)/103 for applications filed on or after November 29, 1999, is precluded by 35 U.S.C. 103(c). See MPEP § 706.02(l) and § 706.02(l)(1).

For case law relating to inventorship by "another" involving different inventive entities with at least one inventor in common see *Ex parte DesOrmeaux*, 25 USPQ2d 2040 (Bd. Pat. App. & Inter. 1992) (the presence of a common inventor in a reference patent and a pending application does not preclude the determination that the reference inventive entity is to "another" within the meaning of 35 U.S.C. 102(e)) and the discussion of prior art available under 35 U.S.C. 102(e) in MPEP § 2136.04.

2137.02 Applicability of 35 U.S.C. 103(c)

35 U.S.C. 103(c) states that subsection (f) of 35 U.S.C. 102 will not preclude patentability where subject matter developed by another person, that would otherwise qualify under 35 U.S.C. 102(f), and the claimed invention of an application under examination were owned by the same person or subject to an obligation of assignment to the same person at the time the invention was made. See MPEP § 706.02(l) and § 2146.

2138 35 U.S.C. 102(g)

35 U.S.C. 102. Conditions for patentability; novelty and loss of right to patent.

A person shall be entitled to a patent unless -

*****

(g)(1) during the course of an interference conducted under section 135 or section 291, another inventor involved therein establishes, to the extent permitted in section 104, that before such person's invention thereof the invention was made by such other inventor and not abandoned, suppressed, or concealed, or (2) before such person's invention thereof, the invention was made in this country by another inventor who had not abandoned, suppressed, or concealed it. In determining priority of invention under this subsection, there shall be considered not only the respective dates of conception and reduction to practice of the invention, but also the reasonable diligence of one who was first to conceive and last to reduce to practice, from a time prior to conception by the other.

35 U.S.C. 102(g) issues such as conception, reduction to practice and diligence, while more commonly applied to interference matters, also arise in other contexts.

35 U.S.C. 102(g) may form the basis for an *ex parte* rejection if: (1) the subject matter at issue has been actually reduced to practice by another before the applicant's invention; and (2) there has been no abandonment, suppression or concealment. See, e.g., *Amgen, Inc. v. Chugai Pharmaceutical Co.*, 927 F.2d 1200, 1205, 18 USPQ2d 1016, 1020 (Fed. Cir. 1991); *New Idea Farm Equipment Corp. v. Sperry Corp.*, 916 F.2d 1561, 1566, 16 USPQ2d 1424, 1428 (Fed. Cir. 1990); *E.I. DuPont de Nemours & Co. v. Phillips Petroleum Co.*, 849 F.2d 1430, 1434, 7 USPQ2d 1129, 1132 (Fed. Cir. 1988); *Kimberly-Clark v. Johnson & Johnson*, 745 F.2d 1437, 1444-46, 223 USPQ 603, 606-08 (Fed. Cir. 1984). To qualify as prior art under 35 U.S.C. 102(g), however, there must be evidence that the subject matter was actually reduced to practice, in that conception alone is not sufficient. See *Kimberly-Clark*, 745 F.2d at 1445, 223 USPQ at 607. While the filing of an application for patent is a constructive reduction to practice, the filing of an application does not in itself provide the evidence necessary to show an actual reduction to practice of any of the subject matter disclosed in the application as is necessary to provide the basis for an *ex parte* rejection under 35 U.S.C. 102(g). Thus, absent evidence showing an actual reduction to practice (which is generally not available during *ex parte* examination), the disclosure of a United States patent application publication or patent falls under 35 U.S.C. 102(e) and not under 35 U.S.C. 102(g). *Cf. In re Zletz*, 893 F.2d 319, 323, 13 USPQ2d 1320, 1323 (Fed. Cir. 1990) (the disclosure in a reference United States patent does not fall under 35 U.S.C. 102(g) but under 35 U.S.C. 102(e)).

In addition, subject matter qualifying as prior art only under 35 U.S.C. 102(g) may also be the basis for an *ex parte* rejection under 35 U.S.C. 103. See *In re Bass*, 474 F.2d 1276, 1283, 177 USPQ 178, 183 (CCPA 1973) (in an unsuccessful attempt to utilize a 37 CFR 1.131 affidavit relating to a combination application, applicants admitted that the subcombination screen of a copending application which issued as a patent was earlier conceived than the combination). 35 U.S.C. 103(c), however, states that subsection (g) of 35 U.S.C. 102 will not preclude patentability where subject matter developed by another person, that would otherwise qualify under 35 U.S.C. 102(g), and the claimed invention of an application under examination were owned by the same person or subject to an obligation of assignment to the same person at the time the invention was made. See MPEP § 706.02(l) and § 2146.

For additional examples of 35 U.S.C. 102(g) issues such as conception, reduction to practice and dili-

gence outside the context of interference matters, see *In re Costello*, 717 F.2d 1346, 219 USPQ 389 (Fed. Cir. 1983) (discussing the concepts of conception and constructive reduction to practice in the context of a declaration under 37 CFR 1.131), and *Kawai v. Metlesics*, 480 F.2d 880, 178 USPQ 158 (CCPA 1973) (holding constructive reduction to practice for priority under 35 U.S.C. 119 requires meeting the requirements of 35 U.S.C. 101 and 35 U.S.C. 112).

2138.01 Interference Practice

35 U.S.C. 102(g) IS THE BASIS OF INTERFERENCE PRACTICE

Subsection (g) of 35 U.S.C. 102 is the basis of interference practice for determining priority of invention between two parties. See *Bigham v. Godtfredsen*, 857 F.2d 1415, 1416, 8 USPQ2d 1266, 1267 (Fed. Cir. 1988), 35 U.S.C. 135, 37 CFR 1.601+ and MPEP chapter 2300. An interference is an *inter partes* proceeding directed at determining the first to invent as among the parties to the proceeding, involving two or more pending applications naming different inventors or one or more pending applications and one or more unexpired patents naming different inventors (37 CFR 1.601(i)). The United States is unusual in having a first to invent rather than a first to file system. *Paulik v. Rizkalla*, 760 F.2d 1270, 1272, 226 USPQ 224, 225 (Fed. Cir. 1985) (reviews the legislative history of the subsection in a concurring opinion by Judge Rich). The first of many to reduce an invention to practice around the same time will be the sole party to obtain a patent, *Radio Corp. of America v. Radio Eng'g Labs., Inc.*, 293 U.S. 1, 2, 21 USPQ 353, 353-4 (1934), unless another was the first to conceive and couple a later-in-time reduction to practice with diligence from a time just prior to when the second conceiver entered the field to the first conceiver's reduction to practice. *Hull v. Davenport*, 90 F.2d 103, 105, 33 USPQ 506, 508 (CCPA 1937). See the priority time charts below illustrating this point. Upon conclusion of an interference, subject matter claimed by the losing party that was the basis of the interference is rejected under 35 U.S.C. 102(g), unless the acts showing prior invention were not in this country.

It is noted that 35 U.S.C. 101 requires that whoever invents or discovers is the party who may obtain a patent for the particular invention or discovery. 35 U.S.C. 111 (applicant) or 35 U.S.C. 116 (applicants) set forth the requirement that the actual inventor(s) be the party who applies for a patent or that a patent be applied for on behalf of the inventor. Where it can be shown that an applicant has "derived" an invention from another, a rejection under 35 U.S.C. 102(f) is proper. *Ex parte Kusko*, 215 USPQ 972, 974 (Bd. App. 1981) ("most, if not all, determinations under Section 102(f) involve the question of whether one party derived an invention from another"); *Price v. Symsek*, 988 F.2d 1187, 1190, 26 USPQ2d 1031, 1033 (Fed. Cir. 1993) (Although derivation and priority of invention both focus on inventorship, derivation addresses originality, i.e., who invented the subject matter, whereas priority focuses on which party invented the subject matter first.).

PRIORITY TIME CHARTS

The following priority time charts illustrate the award of invention priority in several situations. The time charts apply to interference proceedings and are also applicable to declarations or affidavits filed under 37 CFR 1.131 to antedate references which are available as prior art under 35 U.S.C. 102(a) or 102(e). Note, however, in the context of 37 CFR 1.131, an applicant does not have to show that the invention was not abandoned, suppressed, or concealed from the time of an actual reduction to practice to a constructive reduction to practice because the length of time taken to file a patent application after an actual reduction to practice is generally of no consequence except in an interference proceeding. *Paulik v. Rizkalla*, 760 F.2d 1270, 226 USPQ 224 (Fed. Cir. 1985). See the discussion of abandonment, suppression, and concealment in MPEP § 2138.03.

For purposes of analysis under 37 CFR 1.131, the conception and reduction to practice of the reference to be antedated are both considered to be on the effective filing date of domestic patent or foreign patent or the date of printed publication.

In the charts, C = conception, R = reduction to practice (either actual or constructive), Ra = actual reduction to practice, Rc = constructive reduction to practice, and T_D = commencement of diligence.

Example 1

```
    C                Rc
A   • ---------------- >•
            C                R
B           • --------------- >•
```

A is awarded priority in an interference, or antedates B as a reference in the context of a declaration or affidavit filed under 37 CFR 1.131, because A conceived the invention before B and constructively reduced the invention to practice before B reduced the invention to practice. The same result would be reached if the conception date was the same for both inventors A and B.

Example 2

```
    C        TD                Rc
A   • -------- | ---------------- >•
            C          R
B           • ---------- >•
```

A is awarded priority in an interference, or antedates B as a reference in the context of a declaration or affidavit filed under 37 CFR 1.131, if A can show reasonable diligence from T_D (a point just prior to B's conception) until Rc because A conceived the invention before B, and diligently constructively reduced the invention to practice even though this was after B reduced the invention to practice.

Example 3

```
    C                Ra        Rc
A   • ---------------- >--------- >•
        C                R
B       • ---------------- >•
```

A is awarded priority in an interference in the absence of abandonment, suppression, or concealment from Ra to Rc, because A conceived the invention before B, actually reduced the invention to practice before B reduced the invention to practice, and did not abandon, suppress, or conceal the invention after actually reducing the invention to practice and before constructively reducing the invention to practice.

A antedates B as a reference in the context of a declaration or affidavit filed under 37 CFR 1.131 because A conceived the invention before B and actually reduced the invention to practice before B reduced the invention to practice.

Example 4

```
    C  TD                Ra       Rc
A   • - | --------------- | -------- >•
        C          R
B       • ---------- >•
```

A is awarded priority in an interference if A can show reasonable diligence from T_D (a point just prior to B's conception) until Ra in the absence of abandonment, suppression, or concealment from Ra to Rc, because A conceived the invention before B, diligently actually reduced the invention to practice (after B reduced the invention to practice), and did not abandon, suppress, or conceal the invention after actually reducing the invention to practice and before constructively reducing the invention to practice.

A antedates B as a reference in the context of a declaration or affidavit filed under 37 CFR 1.131 because A conceived the invention before B, and diligently actually reduced the invention to practice, even though this was after B reduced the invention to practice.

37 CFR 1.131 DOES NOT APPLY IN INTERFERENCE PROCEEDINGS

Interference practice operates to the exclusion of *ex parte* practice under 37 CFR 1.131 which permits an applicant to show an actual date of invention prior to the effective date of a patent or literature reference applied under 35 U.S.C. 102(a) or (e), as long as the patent is not a domestic patent claiming the same patentable invention. *Ex parte Standish*, 10 USPQ2d 1454, 1457 (Bd. Pat. App. & Inter. 1988) (An application claim to the "same patentable invention" claimed in a domestic patent requires interference rather than an affidavit under 37 CFR 1.131 to antedate the patent. The term "same patentable invention" encompasses a claim that is either anticipated by or obvious in view of the subject matter recited in the patent claim.). Subject matter which is available as prior art

only under 35 U.S.C. 102(g) is by definition made before the applicant made his invention and is therefore not open to further inquiry under 37 CFR 1.131.

LOST COUNTS IN AN INTERFERENCE ARE NOT, *PER SE*, STATUTORY PRIOR ART

Loss of an interference count alone does not make its subject matter statutory prior art to losing party; however, lost count subject matter that is available as prior art under 35 U.S.C. 102 may be used alone or in combination with other references under 35 U.S.C. 103. But see *In re Deckler*, 977 F.2d 1449, 24 USPQ2d 1448 (Fed. Cir. 1992) (Under the principles of *res judicata* and *collateral estoppel*, Deckler was not entitled to claims that were patentably indistinguishable from the claim lost in interference even though the subject matter of the lost count was not available for use in an obviousness rejection under 35 U.S.C. 103.).

2138.02 "The Invention Was Made in This Country"

An invention is made when there is a conception and a reduction to practice. *Dunn v. Ragin*, 50 USPQ 472, 474 (Bd. Pat. Inter. 1941). Prior art under 35 U.S.C. 102(g) is limited to an invention that is made. *In re Katz*, 687 F.2d 450, 454, 215 USPQ 14, 17 (CCPA 1982) (the publication of an article, alone, is not deemed a constructive reduction to practice, and therefore its disclosure does not prove that any invention within the meaning of 35 U.S.C. 102(g) has ever been made).

Subject matter under 35 U.S.C. 102(g) is available only if made in this country. 35 U.S.C. 104. *Kondo v. Martel*, 220 USPQ 47 (Bd. Pat. Inter. 1983) (acts of conception, reduction to practice and diligence must be demonstrated in this country). Compare *Colbert v. Lofdahl*, 21 USPQ2d 1068, 1071 (Bd. Pat. App. & Inter. 1991) ("[i]f the invention is reduced to practice in a foreign country and knowledge of the invention was brought into this country and disclosed to others, the inventor can derive no benefit from the work done abroad and such knowledge is merely evidence of conception of the invention").

In accordance with 35 U.S.C. 102(g)(1), a party involved in an interference proceeding under 35 U.S.C. 135 or 291 may establish a date of invention under 35 U.S.C. 104. 35 U.S.C. 104, as amended by GATT (Public Law 103-465, 108 Stat. 4809 (1994)) and NAFTA (Public Law 103-182, 107 Stat. 2057 (1993)), provides that an applicant can establish a date of invention in a NAFTA member country on or after December 8, 1993 or in WTO member country other than a NAFTA member country on or after January 1, 1996. Accordingly, an interference count may be won or lost on the basis of establishment of invention by one of the parties in a NAFTA or WTO member country, thereby rendering the subject matter of that count unpatentable to the other party under the principles of *res judicata* and *collateral estoppel*, even though such subject matter is not available as statutory prior art under 35 U.S.C. 102(g). See MPEP § 2138.01 regarding lost interference counts which are not statutory prior art.

2138.03 "By Another Who Has Not Abandoned, Suppressed, or Concealed It"

35 U.S.C. 102(g) generally makes available as prior art within the meaning of 35 U.S.C. 103, the prior invention of another who has not abandoned, suppressed or concealed it. *In re Bass*, 474 F.2d 1276, 177 USPQ 178 (CCPA 1973); *In re Suska*, 589 F.2d 527, 200 USPQ 497 (CCPA 1979) (The result of applying the suppression and concealment doctrine is that the inventor who did not conceal (but was the *de facto* last inventor) is treated legally as the first to invent, while the *de facto* first inventor who suppressed or concealed is treated as a later inventor. The *de facto* first inventor, by his suppression and concealment, lost the right to rely on his actual date of invention not only for priority purposes, but also for purposes of avoiding the invention of the counts as prior art.).

"The courts have consistently held that an invention, though completed, is deemed abandoned, suppressed, or concealed if, within a reasonable time after completion, no steps are taken to make the invention publicly known. Thus failure to file a patent application; to describe the invention in a publicly disseminated document; or to use the invention publicly, have been held to constitute abandonment, suppression, or concealment." *Correge v. Murphy*, 705 F.2d 1326, 1330, 217 USPQ 753, 756 (Fed. Cir. 1983) (quoting *International Glass Co. v. United States*, 408 F.2d 395, 403, 159 USPQ 434, 441 (Ct. Cl.

1968)). In *Correge*, an invention was actually reduced to practice, 7 months later there was a public disclosure of the invention, and 8 months thereafter a patent application was filed. The court held filing a patent application within 1 year of a public disclosure is not an unreasonable delay, therefore reasonable diligence must only be shown between the date of the actual reduction to practice and the public disclosure to avoid the inference of abandonment.

DURING AN INTERFERENCE PROCEEDING, AN INFERENCE OF SUPPRESSION OR CONCEALMENT MAY ARISE FROM DELAY IN FILING PATENT APPLICATION

Once an invention is actually reduced to practice an inventor need not rush to file a patent application. *Shindelar v. Holdeman*, 628 F.2d 1337, 1341, 207 USPQ 112, 116 (CCPA 1980). The length of time taken to file a patent application after an actual reduction to practice is generally of no consequence except in an interference proceeding. *Paulik v. Rizkalla*, 760 F.2d 1270, 1271, 226 USPQ 225, 226 (Fed. Cir. 1985) (suppression or concealment may be deliberate or may arise due to an inference from a "too long" delay in filing a patent application). *Peeler v. Miller*, 535 F.2d 647, 656, 190 USPQ 117,124 (CCPA 1976) ("mere delay, without more, is not sufficient to establish suppression or concealment." "What we are deciding here is that Monsanto's delay is not 'merely delay' and that Monsanto's justification for the delay is inadequate to overcome the inference of suppression created by the excessive delay." The word "mere" does not imply a total absence of a limit on the duration of delay. Whether any delay is "mere" is decided only on a case-by-case basis.).

Where a junior party in an interference relies upon an actual reduction to practice to demonstrate first inventorship, and where the hiatus in time between the date for the junior party's asserted reduction to practice and the filing of its application is unreasonably long, the hiatus may give rise to an inference that the junior party in fact suppressed or concealed the invention and the junior party will not be allowed to rely upon the earlier actual reduction to practice. *Young v. Dworkin*, 489 F.2d 1277, 1280 n.3, 180 USPQ 388, 391 n.3 (CCPA 1974) (suppression and concealment issues are to be addressed on a case-by-case basis).

SUPPRESSION OR CONCEALMENT NEED NOT BE ATTRIBUTED TO INVENTOR

Suppression or concealment need not be attributed to the inventor. *Peeler v. Miller*, 535 F.2d 647, 653-54, 190 USPQ 117, 122 (CCPA 1976) ("four year delay from the time an inventor ... completes his work ... and the time his assignee-employer files a patent application is, *prima facie*, unreasonably long in an interference with a party who filed first"); *Shindelar v. Holdeman*, 628 F.2d 1337, 1341-42, 207 USPQ 112, 116-17 (CCPA 1980) (A patent attorney's workload will not preclude a holding of an unreasonable delay—a total of 3 months was identified as possible of excuse in regard to the filing of an application.).

INFERENCE OF SUPPRESSION OR CONCEALMENT IS REBUTTABLE

Notwithstanding a finding of suppression or concealment, a constructive reduction to practice such as renewed activity just prior to other party's entry into field coupled with the diligent filing of an application would still cause the junior party to prevail. *Lutzker v. Plet*, 843 F.2d 1364, 1367-69, 6 USPQ2d 1370, 1371-72 (Fed. Cir. 1988) (activities directed towards commercialization not sufficient to rebut inference); *Holmwood v. Cherpeck*, 2 USPQ2d 1942, 1945 (Bd. Pat. App. & Inter. 1986) (the inference of suppression or concealment may be rebutted by showing activity directed to perfecting the invention, preparing the application, or preparing other compounds within the scope of the generic invention); *Engelhardt v. Judd*, 369 F.2d 408, 411, 151 USPQ 732, 735 (CCPA 1966) ("We recognize that an inventor of a new series of compounds should not be forced to file applications piecemeal on each new member as it is synthesized, identified and tested for utility. A reasonable amount of time should be allowed for completion of the research project on the whole series of new compounds, and a further reasonable time period should then be allowed for drafting and filing the patent application(s) thereon."); *Bogoslowsky v. Huse*, 142 F.2d 75, 77, 61 USPQ 349, 351 (CCPA 1944) (The doctrine of suppression and concealment is not applicable to conception without an actual reduction to practice.).

ABANDONMENT

A finding of suppression or concealment may not amount to a finding of abandonment wherein a right to a patent is lost. *Steierman v. Connelly*, 197 USPQ 288, 289 (Comm'r Pat. 1976); *Correge v. Murphy*, 705 F.2d 1326, 1329, 217 USPQ 753, 755 (Fed. Cir. 1983) (an invention cannot be abandoned until it is first reduced to practice).

2138.04 "Conception"

Conception has been defined as "the complete performance of the mental part of the inventive act" and it is "the formation in the mind of the inventor of a definite and permanent idea of the complete and operative invention as it is thereafter to be applied in practice...." *Townsend v. Smith*, 36 F.2d 292, 295, 4 USPQ 269, 271 (CCPA 1930). "[C]onception is established when the invention is made sufficiently clear to enable one skilled in the art to reduce it to practice without the exercise of extensive experimentation or the exercise of inventive skill." *Hiatt v. Ziegler*, 179 USPQ 757, 763 (Bd. Pat. Inter. 1973). Conception has also been defined as a disclosure of an invention which enables one skilled in the art to reduce the invention to a practical form without "exercise of the inventive faculty." *Gunter v. Stream*, 573 F.2d 77, 197 USPQ 482 (CCPA 1978). See also *Coleman v. Dines*, 754 F.2d 353, 224 USPQ 857 (Fed. Cir. 1985) (It is settled that in establishing conception a party must show possession of every feature recited in the count, and that every limitation of the count must have been known to the inventor at the time of the alleged conception. Conception must be proved by corroborating evidence.); *Hybritech Inc. v. Monoclonal Antibodies Inc.*, 802 F. 2d 1367, 1376, 231 USPQ 81, 87 (Fed. Cir. 1986) (Conception is the "formation in the mind of the inventor, of a definite and permanent idea of the complete and operative invention, as it is hereafter to be applied in practice."); *Hitzeman v. Rutter*, 243 F.3d 1345, 58 USPQ2d 1161 (Fed. Cir. 2001) (Inventor's "hope" that a genetically altered yeast would produce antigen particles having the particle size and sedimentation rates recited in the claims did not establish conception, since the inventor did not show that he had a "definite and permanent understanding" as to whether or how, or a reasonable expectation that, the yeast would produce the recited antigen particles.).

CONCEPTION MUST BE DONE IN THE MIND OF THE INVENTOR

The inventor must form a definite and permanent idea of the complete and operable invention to establish conception. *Bosies v. Benedict*, 27 F.3d 539, 543, 30 USPQ2d 1862, 1865 (Fed. Cir. 1994) (Testimony by a noninventor as to the meaning of a variable of a generic compound described in an inventor's notebook was insufficient as a matter of law to establish the meaning of the variable because the testimony was not probative of what the inventors conceived.).

AS LONG AS THE INVENTOR MAINTAINS INTELLECTUAL DOMINATION OVER MAKING THE INVENTION, IDEAS, SUGGESTIONS, AND MATERIALS MAY BE ADOPTED FROM OTHERS

An inventor may consider and adopt ideas, suggestions and materials derived from many sources: a suggestion from an employee, a hired consultant or a friend even if the adopted material proves to be the key that unlocks the problem so long as the inventor "maintains intellectual domination of the work of making the invention down to the successful testing, selecting or rejecting...." *Morse v. Porter*, 155 USPQ 280, 283 (Bd. Pat. Inter. 1965); *Staehelin v. Secher*, 24 USPQ2d 1513, 1522 (Bd. Pat. App. & Inter. 1992) ("evidence of conception naming only one of the actual inventive entity inures to the benefit of and serves as evidence of conception by the complete inventive entity").

CONCEPTION REQUIRES CONTEMPORANEOUS RECOGNITION AND APPRECIATION OF THE INVENTION

There must be a contemporaneous recognition and appreciation of the invention for there to be conception. *Silvestri v. Grant*, 496 F.2d 593, 596, 181 USPQ 706, 708 (CCPA 1974) ("an accidental and unappreciated duplication of an invention does not defeat the patent right of one who, though later in time was the first to recognize that which constitutes the inventive subject matter"); *Langer v. Kaufman*, 465 F.2d 915, 918, 175 USPQ 172, 174 (CCPA 1972) (new form of catalyst was not recognized when it was first produced; conception cannot be established *nunc pro tunc*). However, an inventor does not need to

know that the invention will work for there to be complete conception. *Burroughs Wellcome Co. v. Barr Labs., Inc.*, 40 F.3d 1223, 1228, 32 USPQ2d 1915, 1919 (Fed. Cir. 1994) (Draft patent application disclosing treatment of AIDS with AZT reciting dosages, forms, and routes of administration was sufficient to collaborate conception whether or not the inventors believed the inventions would work based on initial screening tests.).

While conception of a species within a genus may constitute conception of the genus, conception of one species and the genus may not constitute conception of another species in the genus. *Oka v. Youssefyeh*, 849 F.2d 581, 7 USPQ2d 1169 (Fed. Cir. 1988) (conception of a chemical requires both the idea of the structure of the chemical and possession of an operative method of making it). See also *Amgen v. Chugai Pharmaceutical Co.*, 927 F.2d 1200, 1206, 18 USPQ2d 1016, 1021 (Fed. Cir. 1991) (in the isolation of a gene, defining a gene by its principal biological property is not sufficient for conception absent an ability to envision the detailed constitution as well as a method for obtaining it); *Fiers v. Revel*, 984 F.2d 1164, 1170, 25 USPQ2d 1601, 1605 (Fed. Cir. 1993) ("[b]efore reduction to practice, conception only of a process for making a substance, without conception of a structural or equivalent definition of that substance, can at most constitute a conception of the substance claimed as a process" but cannot constitute conception of the substance; as "conception is not enablement," conception of a purified DNA sequence coding for a specific protein by function and a method for its isolation that could be carried out by one of ordinary skill in the art is not conception of that material).

On rare occasions conception and reduction to practice occur simultaneously. *Alpert v. Slatin*, 305 F.2d 891, 894, 134 USPQ 296, 299 (CCPA 1962). "[I]n some unpredictable areas of chemistry and biology, there is no conception until the invention has been reduced to practice." *MacMillan v. Moffett*, 432 F.2d 1237, 1234-40, 167 USPQ 550, 552-553 (CCPA 1970). See also *Hitzeman v. Rutter*, 243 F.3d 1345, 58 USPQ2d 1161 (Fed. Cir. 2001) (conception simultaneous with reduction to practice where appellant lacked reasonable certainty that yeast's performance of certain intracellular processes would result in the claimed antigen particles); *Dunn v. Ragin*, 50 USPQ 472, 475 (Bd. Pat. Inter. 1941) (a new variety of asexually reproduced plant is conceived and reduced to practice when it is grown and recognized as a new variety). Under these circumstances, conception is not complete if subsequent experimentation reveals factual uncertainty which "so undermines the specificity of the inventor's idea that it is not yet a definite and permanent reflection of the complete invention as it will be used in practice." *Burroughs Wellcome Co. v. Barr Labs., Inc.*, 40 F.3d 1223, 1229, 32 USPQ2d 1915, 1920 (Fed. Cir. 1994).

A PREVIOUSLY ABANDONED APPLICATION WHICH WAS NOT COPENDING WITH A SUBSEQUENT APPLICATION IS EVIDENCE ONLY OF CONCEPTION

An abandoned application with which no subsequent application was copending serves to abandon benefit of the application's filing as a constructive reduction to practice and the abandoned application is evidence only of conception. *In re Costello*, 717 F.2d 1346, 1350, 219 USPQ 389, 392 (Fed. Cir. 1983).

2138.05 "Reduction to Practice"

Reduction to practice may be an actual reduction or a constructive reduction to practice which occurs when a patent application on the claimed invention is filed. The filing of a patent application serves as conception and constructive reduction to practice of the subject matter described in the application. Thus the inventor need not provide evidence of either conception or actual reduction to practice when relying on the content of the patent application. *Hyatt v. Boone*, 146 F.3d 1348, 1352, 47 USPQ2d 1128, 1130 (Fed. Cir. 1998). A reduction to practice can be done by another on behalf of the inventor. *De Solms v. Schoenwald*, 15 USPQ2d 1507, 1510 (Bd. Pat. App. & Inter. 1990). "While the filing of the original application theoretically constituted a constructive reduction to practice at the time, the subsequent abandonment of that application also resulted in an abandonment of the benefit of that filing as a constructive reduction to practice. The filing of the original application is, however, evidence of conception of the invention." *In re Costello*, 717 F.2d 1346, 1350, 219 USPQ 389, 392 (Fed. Cir. 1983).

CONSTRUCTIVE REDUCTION TO PRACTICE REQUIRES COMPLIANCE WITH 35 U.S.C. 112, FIRST PARAGRAPH

When a party to an interference seeks the benefit of an earlier-filed U.S. patent application, the earlier application must meet the requirements of 35 U.S.C. 120 and 35 U.S.C. 112, first paragraph for the subject matter of the count. The earlier application must meet the enablement requirement and must contain a written description of the subject matter of the interference count. *Hyatt v. Boone*, 146 F.3d 1348, 1352, 47 USPQ2d 1128, 1130 (Fed. Cir. 1998). Proof of a constructive reduction to practice requires sufficient disclosure under the "how to use" and "how to make" requirements of 35 U.S.C. 112, first paragraph. *Kawai v. Metlesics*, 480 F.2d 880, 886, 178 USPQ 158, 163 (CCPA 1973) (A constructive reduction to practice is not proven unless the specification discloses a practical utility where one would not be obvious. Prior art which disclosed an anticonvulsant compound which differed from the claimed compound only in the absence of a $-CH_2-$ group connecting two functional groups was not sufficient to establish utility of the claimed compound because the compounds were not so closely related that they could be presumed to have the same utility.). The purpose of the written description requirement is "to ensure that the inventor had possession, as of the filing date of the application relied on, of the specific subject matter later claimed by him." *In re Edwards*, 568 F.2d 1349, 1351-52, 196 USPQ 465, 467 (CCPA 1978). The written description must include all of the limitations of the interference count, or the applicant must show that any absent text is necessarily comprehended in the description provided and would have been so understood at the time the patent application was filed. Furthermore, the written description must be sufficient, when the entire specification is considered, such that the "necessary and only reasonable construction" that would be given it by a person skilled in the art is one that clearly supports each positive limitation in the count. *Hyatt v. Boone*, 146 F.3d at 1354-55, 47 USPQ2d at 1130-1132 (Fed. Cir. 1998) (The claim could be read as describing subject matter other than that of the count and thus did not establish that the applicant was in possession of the invention of the count.). See also *Bigham v. Godtfredsen*, 857 F.2d 1415, 1417, 8 USPQ2d 1266, 1268 (Fed. Cir. 1988) ("[t]he generic term halogen comprehends a limited number of species, and ordinarily constitutes a sufficient written description of the common halogen species," except where the halogen species are patentably distinct).

REQUIREMENTS TO ESTABLISH ACTUAL REDUCTION TO PRACTICE

"In an interference proceeding, a party seeking to establish an actual reduction to practice must satisfy a two-prong test: (1) the party constructed an embodiment or performed a process that met every element of the interference count, and (2) the embodiment or process operated for its intended purpose." *Eaton v. Evans*, 204 F.3d 1094, 1097, 53 USPQ2d 1696, 1698 (Fed. Cir. 2000).

The same evidence sufficient for a constructive reduction to practice may be insufficient to establish an actual reduction to practice, which requires a showing of the invention in a physical or tangible form that shows every element of the count. *Wetmore v. Quick*, 536 F.2d 937, 942, 190 USPQ 223, 227 (CCPA 1976). For an actual reduction to practice, the invention must have been sufficiently tested to demonstrate that it will work for its intended purpose, but it need not be in a commercially satisfactory stage of development. If a device is so simple, and its purpose and efficacy so obvious, construction alone is sufficient to demonstrate workability. *King Instrument Corp. v. Otari Corp.*, 767 F.2d 853, 860, 226 USPQ 402, 407 (Fed. Cir. 1985).

For additional cases pertaining to the requirements necessary to establish actual reduction to practice see *DSL Dynamic Sciences, Ltd. v. Union Switch & Signal, Inc.*, 928 F.2d 1122, 1126, 18 USPQ2d 1152, 1155 (Fed. Cir. 1991) ("events occurring after an alleged actual reduction to practice can call into question whether reduction to practice has in fact occurred"); *Corona v. Dovan*, 273 U.S. 692, 1928 C.D. 252 (1928) ("A <u>process</u> is reduced to practice when it is successfully performed. A <u>machine</u> is reduced to practice when it is assembled, adjusted and used. A <u>manufacture</u> [i.e., article of manufacture] is reduced to practice when it is completely manufactured. A <u>composition of matter</u> is reduced to practice when it is completely composed." 1928 C.D. at 262-263 (emphasis added).); *Fitzgerald v. Arbib*, 268 F.2d 763, 765-66, 122 USPQ 530, 531-32 (CCPA 1959)

("the reduction to practice of a three-dimensional design invention requires the production of an article embodying that design" in "other than a mere drawing").

TESTING REQUIRED TO ESTABLISH AN ACTUAL REDUCTION TO PRACTICE

"The nature of testing which is required to establish a reduction to practice depends on the particular facts of each case, especially the nature of the invention." *Gellert v. Wanberg*, 495 F.2d 779, 783, 181 USPQ 648, 652 (CCPA 1974) ("an invention may be tested sufficiently ... where less than all of the conditions of actual use are duplicated by the tests"); *Wells v. Fremont*, 177 USPQ 22, 24-5 (Bd. Pat. Inter. 1972) ("even where tests are conducted under 'bench' or laboratory conditions, those conditions must 'fully duplicate each and every condition of actual use' or if they do not, then the evidence must establish a relationship between the subject matter, the test condition and the intended functional setting of the invention," but it is not required that all the conditions of all actual uses be duplicated, such as rain, snow, mud, dust and submersion in water).

REDUCTION TO PRACTICE REQUIRES RECOGNITION AND APPRECIATION OF THE INVENTION

The invention must be recognized and appreciated for a reduction to practice to occur. "The rule that conception and reduction to practice cannot be established nunc pro tunc simply requires that in order for an experiment to constitute an actual reduction to practice, there must have been contemporaneous appreciation of the invention at issue by the inventor.... Subsequent testing or later recognition may not be used to show that a party had contemporaneous appreciation of the invention. However, evidence of subsequent testing may be admitted for the purpose of showing that an embodiment was produced and that it met the limitations of the count." *Cooper v. Goldfarb*, 154 F.3d 1321, 1331, 47 USPQ2d 1896, 1904 (Fed. Cir. 1998) (citations omitted). *Meitzner v. Corte*, 537 F.2d 524, 528, 190 USPQ 407, 410 (CCPA 1976) (there can be no conception or reduction to practice of a new form or of a process using such a new form of an otherwise old composition where there has been no recognition or appreciation of the existence of the new form); *Estee Lauder, Inc. v. L'Oreal S.A.*, 129 F.3d 588, 593, 44 USPQ2d 1610, 1615 (Fed. Cir. 1997) ("[W]hen testing is necessary to establish utility, there must be recognition and appreciation that the tests were successful for reduction to practice to occur." A showing that testing was completed before the critical date, and that testing ultimately proved successful, was held insufficient to establish a reduction to practice before the critical date, since the success of the testing was not appreciated or recognized until after the critical date.); *Parker v. Frilette*, 462 F.2d 544, 547, 174 USPQ 321, 324 (CCPA 1972) ("[an] inventor need not understand precisely why his invention works in order to achieve an actual reduction to practice").

RECOGNITION OF THE INVENTION BY ANOTHER MAY INURE TO THE BENEFIT OF THE INVENTOR

"Inurement involves a claim by an inventor that, as a matter of law, the acts of another person should accrue to the benefit of the inventor." *Cooper v. Goldfarb*, 154 F.3d 1321, 1331, 47 USPQ2d 1896, 1904 (Fed. Cir. 1998). Before a non-inventor's recognition of the utility of the invention can inure to the benefit of the inventor, the following three-prong test must be met: (1) the inventor must have conceived of the invention, (2) the inventor must have had an expectation that the embodiment tested would work for the intended purpose of the invention, and (3) the inventor must have submitted the embodiment for testing for the intended purpose of the invention. *Genentech Inc. v. Chiron Corp.*, 220 F.3d 1345, 1354, 55 USPQ2d 1636, 1643 (Fed. Cir. 2000). In *Genentech*, a non-inventor hired by the inventors to test yeast samples for the presence of the fusion protein encoded by the DNA construct of the invention recognized the growth-enhancing property of the fusion protein, but did not communicate this recognition to the inventors. The court found that because the inventors did not submit the samples for testing growth-promoting activity, the intended purpose of the invention, the third prong was not satisfied and the uncommunicated recognition of the activity of the fusion protein by the non-inventor did not inure to their benefit. See also *Cooper v. Goldfarb*, 240 F.3d 1378, 1385, 57 USPQ2d 1990, 1995 (Fed. Cir. 2001) (Cooper sent to Goldfarb samples of a material for use

in vascular grafts. At the time the samples were sent, Cooper was unaware of the importance of the fibril length of the material. Cooper did not at any time later convey to, or request from, Goldfarb any information regarding fibril length. Therefore, Goldfarb's determination of the fibril lengths of the material could not inure to Cooper's benefit.).

IN AN INTERFERENCE PROCEEDING, ALL LIMITATIONS OF A COUNT MUST BE REDUCED TO PRACTICE

The device reduced to practice must include every limitation of the count. *Fredkin v. Irasek*, 397 F.2d 342, 158 USPQ 280, 285 (CCPA 1968); every limitation in a count is material and must be proved to establish an actual reduction to practice. *Meitzner v. Corte*, 537 F.2d 524, 528, 190 USPQ 407, 410. See also *Hull v. Bonis*, 214 USPQ 731, 734 (Bd. Pat. Inter. 1982) (no doctrine of equivalents—remedy is a preliminary motion to amend the count to conform to the proofs).

CLAIMED INVENTION IS NOT ACTUALLY REDUCED TO PRACTICE UNLESS THERE IS A KNOWN UTILITY

Utility for the invention must be known at the time of the reduction to practice. *Wiesner v. Weigert*, 666 F.2d 582, 588, 212 USPQ 721, 726 (CCPA 1981) (except for plant and design inventions); *Azar v. Burns*, 188 USPQ 601, 604 (Bd. Pat. Inter. 1975) (a composition and a method cannot be actually reduced to practice unless the composition and the product produced by the method have a practical utility); *Ciric v. Flanigen*, 511 F.2d 1182, 1185, 185 USPQ 103, 105-6 (CCPA 1975) ("when a count does not recite any particular utility, evidence establishing a substantial utility for any purpose is sufficient to prove a reduction to practice"; "the demonstrated similarity of ion exchange and adsorptive properties between the newly discovered zeolites and known crystalline zeolites ... have established utility for the zeolites of the count"); *Engelhardt v. Judd*, 369 F.2d 408, 411, 151 USPQ 732, 735 (CCPA 1966) (When considering an actual reduction to practice as a bar to patentability for claims to compounds, it is sufficient to successfully demonstrate utility of the compounds in animals for somewhat different pharmaceutical purposes than those asserted in the specification for humans.); *Rey-Bellet v. Engelhardt*, 993 F.2d 1380, 1384, 181 USPQ 453, 455 (CCPA 1974) (Two categories of tests on laboratory animals have been considered adequate to show utility and reduction to practice: first, tests carried out to prove utility in humans where there is a satisfactory correlation between humans and animals, and second, tests carried out to prove utility for treating animals.).

A PROBABLE UTILITY MAY NOT BE SUFFICIENT TO ESTABLISH UTILITY

A probable utility does not establish a practical utility, which is established by actual testing or where the utility can be "foretold with certainty." *Bindra v. Kelly*, 206 USPQ 570, 575 (Bd. Pat. Inter. 1979) (Reduction to practice was not established for an intermediate useful in the preparation of a second intermediate with a known utility in the preparation of a pharmaceutical. The record established there was a high degree of probability of a successful preparation because one skilled in the art may have been motivated, in the sense of 35 U.S.C. 103, to prepare the second intermediate from the first intermediate. However, a strong probability of utility is not sufficient to establish practical utility.); *Wu v. Jucker*, 167 USPQ 467, 472 (Bd. Pat. Inter. 1968) (screening test where there was an indication of possible utility is insufficient to establish practical utility). But see *Nelson v. Bowler*, 628 F.2d 853, 858, 206 USPQ 881, 885 (CCPA 1980) (Relevant evidence is judged as a whole for its persuasiveness in linking observed properties to suggested uses. Reasonable correlation between the two is sufficient for an actual reduction to practice.).

2138.06 "Reasonable Diligence"

The diligence of 35 U.S.C. 102(g) relates to reasonable "attorney-diligence" and "engineering-diligence" (*Keizer v. Bradley*, 270 F.2d 396, 397, 123 USPQ 215, 216 (CCPA 1959)), which does not require that "an inventor or his attorney ... drop all other work and concentrate on the particular invention involved...." *Emery v. Ronden*, 188 USPQ 264, 268 (Bd. Pat. Inter. 1974).

CRITICAL PERIOD FOR ESTABLISHING DILIGENCE BETWEEN ONE WHO WAS FIRST TO CONCEIVE BUT LATER TO REDUCE TO PRACTICE THE INVENTION

The critical period for diligence for a first conceiver but second reducer begins not at the time of conception of the first conceiver but just prior to the entry in the field of the party who was first to reduce to practice and continues until the first conceiver reduces to practice. *Hull v. Davenport*, 90 F.2d 103, 105, 33 USPQ 506, 508 (CCPA 1937) ("lack of diligence from the time of conception to the time immediately preceding the conception date of the second conceiver is not regarded as of importance except as it may have a bearing upon his subsequent acts"). What serves as the entry date into the field of a first reducer is dependent upon what is being relied on by the first reducer, e.g., conception plus reasonable diligence to reduction to practice (*Fritsch v. Lin*, 21 USPQ2d 1731, 1734 (Bd. Pat. App. & Inter. 1991), *Emery v. Ronden*, 188 USPQ 264, 268 (Bd. Pat. Inter. 1974)); an actual reduction to practice or a constructive reduction to practice by the filing of either a U.S. application (*Rebstock v. Flouret*, 191 USPQ 342, 345 (Bd. Pat. Inter. 1975)) or reliance upon priority under 35 U.S.C. 119 of a foreign application (*Justus v. Appenzeller*, 177 USPQ 332, 339 (Bd. Pat. Inter. 1971) (chain of priorities under 35 U.S.C. 119 and 120, priority under 35 U.S.C. 119 denied for failure to supply certified copy of the foreign application during pendency of the application filed within the twelfth month)).

THE ENTIRE PERIOD DURING WHICH DILIGENCE IS REQUIRED MUST BE ACCOUNTED FOR BY EITHER AFFIRMATIVE ACTS OR ACCEPTABLE EXCUSES

An applicant must account for the entire period during which diligence is required. *Gould v. Schawlow*, 363 F.2d 908, 919, 150 USPQ 634, 643 (CCPA 1966) (Merely stating that there were no weeks or months that the invention was not worked on is not enough.); *In re Harry*, 333 F.2d 920, 923, 142 USPQ 164, 166 (CCPA 1964) (statement that the subject matter "was diligently reduced to practice" is not a showing but a mere pleading). A 2-day period lacking activity has been held to be fatal. *In re Mulder*, 716 F.2d 1542, 1545, 219 USPQ 189, 193 (Fed. Cir. 1983) (37 CFR 1.131 issue); *Fitzgerald v. Arbib*, 268 F.2d 763, 766, 122 USPQ 530, 532 (CCPA 1959) (Less than 1 month of inactivity during critical period. Efforts to exploit an invention commercially do not constitute diligence in reducing it to practice. An actual reduction to practice in the case of a design for a three-dimensional article requires that it should be embodied in some structure other than a mere drawing.); *Kendall v. Searles*, 173 F.2d 986, 993, 81 USPQ 363, 369 (CCPA 1949) (Diligence requires that applicants must be specific as to dates and facts.).

The period during which diligence is required must be accounted for by either affirmative acts or acceptable excuses. *Rebstock v. Flouret*, 191 USPQ 342, 345 (Bd. Pat. Inter. 1975); *Rieser v. Williams*, 225 F.2d 419, 423, 118 USPQ 96, 100 (CCPA 1958) (Being last to reduce to practice, party cannot prevail unless he has shown that he was first to conceive and that he exercised reasonable diligence during the critical period from just prior to opponent's entry into the field); *Griffith v. Kanamaru*, 816 F.2d 624, 2 USPQ2d 1361 (Fed. Cir. 1987) (Court generally reviewed cases on excuses for inactivity including vacation extended by ill health and daily job demands, and held lack of university funding and personnel are not acceptable excuses.); *Litchfield v. Eigen*, 535 F.2d 72, 190 USPQ 113 (CCPA 1976) (budgetary limits and availability of animals for testing not sufficiently described); *Morway v. Bondi*, 203 F.2d 741, 749, 97 USPQ 318, 323 (CCPA 1953) (voluntarily laying aside inventive concept in pursuit of other projects is generally not an acceptable excuse although there may be circumstances creating exceptions); *Anderson v. Crowther*, 152 USPQ 504, 512 (Bd. Pat. Inter. 1965) (preparation of routine periodic reports covering all accomplishments of the laboratory insufficient to show diligence); *Wu v. Jucker*, 167 USPQ 467, 472-73 (Bd. Pat. Inter. 1968) (applicant improperly allowed test data sheets to accumulate to a sufficient amount to justify interfering with equipment then in use on another project); *Tucker v. Natta*, 171 USPQ 494,498 (Bd. Pat. Inter. 1971) ("[a]ctivity directed toward the reduction to practice of a genus does not establish, *prima facie*, diligence toward the reduction to practice of a species embraced by said genus"); *Justus v. Appenzeller*, 177 USPQ 332, 340-1 (Bd. Pat. Inter. 1971) (Although it is possible that patentee could have reduced the invention to practice in a shorter time by relying on stock items rather than by design-

ing a particular piece of hardware, patentee exercised reasonable diligence to secure the required hardware to actually reduce the invention to practice. "[I]n deciding the question of diligence it is immaterial that the inventor may not have taken the expeditious course....").

WORK RELIED UPON TO SHOW REASONABLE DILIGENCE MUST BE DIRECTLY RELATED TO THE REDUCTION TO PRACTICE

The work relied upon to show reasonable diligence must be directly related to the reduction to practice of the invention in issue. *Naber v. Cricchi*, 567 F.2d 382, 384, 196 USPQ 294, 296 (CCPA 1977), *cert. denied*, 439 U.S. 826 (1978). "[U]nder some circumstances an inventor should also be able to rely on work on closely related inventions as support for diligence toward the reduction to practice on an invention in issue." *Ginos v. Nedelec*, 220 USPQ 831, 836 (Bd. Pat. Inter. 1983) (work on other closely related compounds that were considered to be part of the same invention and which were included as part of a grandparent application). "The work relied upon must be directed to attaining a reduction to practice of the subject matter of the counts. It is not sufficient that the activity relied on concerns related subject matter." *Gunn v. Bosch*, 181 USPQ 758, 761 (Bd. Pat. Inter. 1973) (An actual reduction to practice of the invention at issue which occurred when the inventor was working on a different invention "was fortuitous, and not the result of a continuous intent or effort to reduce to practice the invention here in issue. Such fortuitousness is inconsistent with the exercise of diligence toward reduction to practice of that invention." 181 USPQ at 761. Furthermore, evidence drawn towards work on improvement of samples or specimens generally already in use at the time of conception that are but one element of the oscillator circuit of the count does not show diligence towards the construction and testing of the overall combination.); *Broos v. Barton*, 142 F.2d 690, 691, 61 USPQ 447, 448 (CCPA 1944) (preparation of application in U.S. for foreign filing constitutes diligence); *De Solms v. Schoenwald*, 15 USPQ2d 1507 (Bd. Pat. App. & Inter. 1990) (principles of diligence must be given to inventor's circumstances including skill and time; requirement of corroboration applies only to testimony of inventor); *Huelster v. Reiter*, 168 F.2d 542, 78 USPQ 82 (CCPA 1948) (if inventor was not able to make an actual reduction to practice of the invention, he must also show why he was not able to constructively reduce the invention to practice by the filing of an application).

DILIGENCE REQUIRED IN PREPARING AND FILING PATENT APPLICATION

The diligence of attorney in preparing and filing patent application inures to the benefit of the inventor. Conception was established at least as early as the date a draft of a patent application was finished by a patent attorney on behalf of the inventor. Conception is less a matter of signature than it is one of disclosure. Attorney does not prepare a patent application on behalf of particular named persons, but on behalf of the true inventive entity. Six days to execute and file application is acceptable. *Haskell v. Coleburne*, 671 F.2d 1362, 213 USPQ 192, 195 (CCPA 1982). See also *Bey v. Kollonitsch*, 866 F.2d 1024, 231 USPQ 967 (Fed. Cir. 1986) (Reasonable diligence is all that is required of the attorney. Reasonable diligence is established if attorney worked reasonably hard on the application during the continuous critical period. If the attorney has a reasonable backlog of unrelated cases which he takes up in chronological order and carries out expeditiously, that is sufficient. Work on a related case(s) that contributed substantially to the ultimate preparation of an application can be credited as diligence.).

END OF DILIGENCE PERIOD IS MARKED BY EITHER ACTUAL OR CONSTRUCTIVE REDUCTION TO PRACTICE

"[I]t is of no moment that the end of that period [for diligence] is fixed by a constructive, rather than an actual, reduction to practice." *Justus v. Appenzeller*, 177 USPQ 332, 340-41 (Bd. Pat. Inter. 1971).

2141 35 U.S.C. 103; the Graham Factual Inquiries

35 U.S.C. 103. Conditions for patentability; non-obvious subject matter.

(a) A patent may not be obtained though the invention is not identically disclosed or described as set forth in section 102 of this title, if the differences between the subject matter sought to be patented and the prior art are such that the subject matter as a whole would have been obvious at the time the invention was made to a

person having ordinary skill in the art to which said subject matter pertains. Patentability shall not be negatived by the manner in which the invention was made.

(b)(1)Notwithstanding subsection (a), and upon timely election by the applicant for patent to proceed under this subsection, a biotechnological process using or resulting in a composition of matter that is novel under section 102 and nonobvious under subsection (a) of this section shall be considered nonobvious if-

(A) claims to the process and the composition of matter are contained in either the same application for patent or in separate applications having the same effective filing date; and

(B) the composition of matter, and the process at the time it was invented, were owned by the same person or subject to an obligation of assignment to the same person.

(2) A patent issued on a process under paragraph (1)-

(A) shall also contain the claims to the composition of matter used in or made by that process, or

(B) shall, if such composition of matter is claimed in another patent, be set to expire on the same date as such other patent, notwithstanding section 154.

(3) For purposes of paragraph (1), the term "biotechnological process" means-

(A) a process of genetically altering or otherwise inducing a single- or multi-celled organism to-

(i) express an exogenous nucleotide sequence,

(ii) inhibit, eliminate, augment, or alter expression of an endogenous nucleotide sequence, or

(iii) express a specific physiological characteristic not naturally associated with said organism;

(B) cell fusion procedures yielding a cell line that expresses a specific protein, such as a monoclonal antibody; and

(C) a method of using a product produced by a process defined by subparagraph (A) or (B), or a combination of subparagraphs (A) and (B).

(c) Subject matter developed by another person, which qualifies as prior art only under one or more of subsections (e), (f), and (g) of section 102 of this title, shall not preclude patentability under this section where the subject matter and the claimed invention were, at the time the invention was made, owned by the same person or subject to an obligation of assignment to the same person.

STANDARD OF PATENTABILITY TO BE APPLIED IN OBVIOUSNESS REJECTIONS

Patent examiners carry the responsibility of making sure that the standard of patentability enunciated by the Supreme Court and by the Congress is applied in each and every case. The Supreme Court in *Graham v. John Deere*, 383 U.S. 1, 148 USPQ 459 (1966), stated:

> Under § 103, the scope and content of the prior art are to be determined; differences between the prior art and the claims at issue are to be ascertained; and the level of ordinary skill in the pertinent art resolved. Against this background, the obviousness or nonobviousness of the subject matter is determined. Such secondary considerations as commercial success, long felt but unsolved needs, failure of others, etc., might be utilized to give light to the circumstances surrounding the origin of the subject matter sought to be patented. As indicia of obviousness or nonobviousness, these inquires may have relevancy. . .
>
> This in not to say, however, that there will not be difficulties in applying the nonobviousness test. What is obvious is not a question upon which there is likely to be uniformity of thought in every given factual context. The difficulties, however, are comparable to those encountered daily by the courts in such frames of reference as negligence and scienter, and should be amenable to a case-by-case development. We believe that strict observance of the requirements laid down here will result in that uniformity and definitiveness which Congress called for in the 1952 Act.

Office policy is to follow *Graham v. John Deere Co.* in the consideration and determination of obviousness under 35 U.S.C. 103. As quoted above, the four factual inquires enunciated therein as a background for determining obviousness are as follows:

(A) Determining the scope and contents of the prior art;

(B) Ascertaining the differences between the prior art and the claims in issue;

(C) Resolving the level of ordinary skill in the pertinent art; and

(D) Evaluating evidence of secondary considerations.

The Supreme Court reaffirmed and relied upon the *Graham* three pronged test in its consideration and determination of obviousness in the fact situations presented in *Sakraida v. Ag Pro, Inc.*, 425 U.S. 273, 189 USPQ 449, *reh'g denied*, 426 U.S. 955 (1976) and *Anderson's-Black Rock, Inc. v. Pavement Salvage Co.*, 396 U.S. 57, 163 USPQ 673 (1969). In each case, the Court discussed whether the claimed combinations produced a "new or different function" and a "synergistic result," but it clearly decided whether the claimed inventions were nonobviousness on the basis of the three-way test in *Graham*. Nowhere in its decisions in these cases does the Court state that the "new or different function" and "synergistic result" tests supersede a finding of nonobvious or obviousness under the *Graham* test.

Accordingly, examiners should apply the test for patentability under 35 U.S.C. 103 set forth in *Graham*. See below for a detailed discussion of each of

the *Graham* factual inquiries. It should be noted that the Supreme Court's application of the *Graham* test to the fact circumstances in *Ag Pro* was somewhat stringent, as it was in *Black Rock*. Note *Republic Industries, Inc. v. Schlage Lock Co.*, 592 F.2d 963, 200 USPQ 769 (7th Cir. 1979). The Court of Appeals for the Federal Circuit stated in *Stratoflex, Inc. v. Aeroquip Corp.*, 713 F.2d 1530, 1540, 218 USPQ 871, 880 (Fed. Cir. 1983) that

> A requirement for "synergism" or a "synergistic effect" is nowhere found in the statute, 35 U.S.C. When present, for example in a chemical case, synergism may point toward nonobviousness, but its absence has no place in evaluating the evidence on obviousness. The more objective findings suggested in *Graham*, supra, are drawn from the language of the statute and are fully adequate guides for evaluating the evidence relating to compliance with 35 U.S.C. § 103. *Bowser Inc. v. United States*, 388 F. 2d 346, 156 USPQ 406 (Ct. Cl. 1967).

BASIC CONSIDERATIONS WHICH APPLY TO OBVIOUSNESS REJECTIONS

When applying 35 U.S.C. 103, the following tenets of patent law must be adhered to:

(A) The claimed invention must be considered as a whole;

(B) The references must be considered as a whole and must suggest the desirability and thus the obviousness of making the combination;

(C) The references must be viewed without the benefit of impermissible hindsight vision afforded by the claimed invention; and

(D) Reasonable expectation of success is the standard with which obviousness is determined.

Hodosh v. Block Drug Co., Inc., 786 F.2d 1136, 1143 n.5, 229 USPQ 182, 187 n.5 (Fed. Cir. 1986).

OBJECTIVE EVIDENCE MUST BE CONSIDERED

Objective evidence or secondary considerations such as unexpected results, commercial success, long-felt need, failure of others, copying by others, licensing, and skepticism of experts are relevant to the issue of obviousness and must be considered in every case in which they are present. When evidence of any of these secondary considerations is submitted, the examiner must evaluate the evidence. The weight to be accorded to the evidence depends on the individual factual circumstances of each case. *Stratoflex, Inc. v. Aeroquip Corp.*, 713 F.2d 1530, 218 USPQ 871 (Fed. Cir. 1983); *Hybritech, Inc. v. Monoclonal Antibodies, Inc.*, 802 F.2d 1367, 231 USPQ 81 (Fed. Cir. 1986), *cert. denied*, 480 U.S. 947 (1987). The ultimate determination on patentability is made on the entire record. *In re Oetiker*, 977 F.2d 1443, 1446, 24 USPQ2d 1443, 1445 (Fed. Cir. 1992).

See MPEP § 716- § 716.06 for a discussion of objective evidence and its role in the final legal determination of whether a claimed invention would have been obvious under 35 U.S.C. 103.

2141.01 Scope and Content of the Prior Art

I. PRIOR ART AVAILABLE UNDER 35 U.S.C. 102 IS AVAILABLE UNDER 35 U.S.C. 103

"Before answering *Graham's* 'content' inquiry, it must be known whether a patent or publication is in the prior art under 35 U.S.C. § 102." *Panduit Corp. v. Dennison Mfg. Co.*, 810 F.2d 1561, 1568, 1 USPQ2d 1593, 1597 (Fed. Cir.), *cert. denied*, 481 U.S. 1052 (1987). Subject matter that is prior art under 35 U.S.C. 102 can be used to support a rejection under section 103. *Ex parte Andresen*, 212 USPQ 100, 102 (Bd. Pat. App. & Inter. 1981) ("it appears to us that the commentator [of 35 U.S.C.A.] and the [congressional] committee viewed section 103 as including all of the various bars to a patent as set forth in section 102.").

A 35 U.S.C. 103 rejection is based on 35 U.S.C. 102(a), 102(b), 102(e), etc. depending on the type of prior art reference used and its publication or issue date. For instance, an obviousness rejection over a U.S. patent which was issued more than 1 year before the filing date of the application is said to be a statutory bar just as if it anticipated the claims under 35 U.S.C. 102(b). Analogously, an obviousness rejection based on a publication which would be applied under 102(a) if it anticipated the claims can be overcome by swearing behind the publication date of the reference by filing an affidavit or declaration under 37 CFR 1.131.

For an overview of what constitutes prior art under 35 U.S.C. 102, see MPEP § 901 - § 901.06(d) and § 2121 - § 2129.

II. SUBSTANTIVE CONTENT OF THE PRIOR ART

See MPEP § 2121 - § 2129 for case law relating to the substantive content of the prior art (e.g., availability of inoperative devices, extent to which prior art must be enabling, broad disclosure rather than preferred embodiments, admissions, etc.).

III. CONTENT OF THE PRIOR ART IS DETERMINED AT THE TIME THE INVENTION WAS MADE TO AVOID HINDSIGHT

The requirement "at the time the invention was made" is to avoid impermissible hindsight. See MPEP § 2145, paragraph X.A. for a discussion of rebutting applicants' arguments that a rejection is based on hindsight.

"It is difficult but necessary that the decisionmaker forget what he or she has been taught . . . about the claimed invention and cast the mind back to the time the invention was made (often as here many years), to occupy the mind of one skilled in the art who is presented only with the references, and who is normally guided by the then-accepted wisdom in the art." *W.L. Gore & Associates, Inc. v. Garlock, Inc.*, 721 F.2d 1540, 220 USPQ 303, 313 (Fed. Cir. 1983), *cert. denied*, 469 U.S. 851 (1984).

IV. 35 U.S.C. 103(c) — EVIDENCE REQUIRED TO SHOW CONDITIONS OF 35 U.S.C. 103 APPLY

An applicant who wants to avail himself or herself of the benefits of 35 U.S.C. 103(c) has the burden of establishing that subject matter which qualifies as prior art under subsection (e), (f) or (g) of section 102 and the claimed invention were, at the time the invention was made, owned by the same person or subject to an obligation of assignment to the same person. *Ex parte Yoshino*, 227 USPQ 52 (Bd. Pat. App. & Inter. 1985). Note that for applications filed prior to November 29, 1999, 35 U.S.C. 103(c) is limited on its face to subject matter developed by another person which qualifies as prior art only under subsection (f) or (g) of section 102. See MPEP § 706.02(l)(1). See also *In re Bartfeld*, 925 F.2d 1450, 1453-54, 17 USPQ2d 1885, 1888 (Fed. Cir. 1991) (Applicant attempted to overcome a 35 U.S.C. 102(e)/103 rejection with a terminal disclaimer by alleging that the public policy intent of 35 U.S.C 103(c) was to prohibit the use of "secret" prior art in obviousness determinations. The court rejected this argument, holding "We may not disregard the unambiguous exclusion of § 102(e) from the statute's purview.").

See MPEP § 706.02(l)(2) for the requirements which must be met to establish common ownership.

2141.01(a) Analogous and Nonanalogous Art

TO RELY ON A REFERENCE UNDER 35 U.S.C. 103, IT MUST BE ANALOGOUS PRIOR ART

The examiner must determine what is "analogous prior art" for the purpose of analyzing the obviousness of the subject matter at issue. "In order to rely on a reference as a basis for rejection of an applicant's invention, the reference must either be in the field of applicant's endeavor or, if not, then be reasonably pertinent to the particular problem with which the inventor was concerned." *In re Oetiker*, 977 F.2d 1443, 1446, 24 USPQ2d 1443, 1445 (Fed. Cir. 1992). See also *In re Deminski*, 796 F.2d 436, 230 USPQ 313 (Fed. Cir. 1986); *In re Clay*, 966 F.2d 656, 659, 23 USPQ2d 1058, 1060-61 (Fed. Cir. 1992) ("A reference is reasonably pertinent if, even though it may be in a different field from that of the inventor's endeavor, it is one which, because of the matter with which it deals, logically would have commended itself to an inventor's attention in considering his problem."); and *Wang Laboratories Inc. v. Toshiba Corp.*, 993 F.2d 858, 26 USPQ2d 1767 (Fed. Cir. 1993).

PTO CLASSIFICATION IS SOME EVIDENCE OF ANALOGY, BUT SIMILARITIES AND DIFFERENCES IN STRUCTURE AND FUNCTION CARRY MORE WEIGHT

While Patent Office classification of references and the cross-references in the official search notes are some evidence of "nonanalogy" or "analogy" respectively, the court has found "the similarities and differences in structure and function of the inventions to carry far greater weight." *In re Ellis*, 476 F.2d 1370, 1372, 177 USPQ 526, 527 (CCPA 1973) (The structural similarities and functional overlap between the structural gratings shown by one reference and the

shoe scrapers of the type shown by another reference were readily apparent, and therefore the arts to which the reference patents belonged were reasonably pertinent to the art with which appellant's invention dealt (pedestrian floor gratings).); *In re Clay*, 966 F.2d 656, 23 USPQ2d 1058 (Fed. Cir. 1992) (Claims were directed to a process for storing a refined liquid hydrocarbon product in a storage tank having a dead volume between the tank bottom and its outlet port wherein a gelled solution filled the tank's dead volume to prevent loss of stored product while preventing contamination. One of the references relied upon disclosed a process for reducing the permeability of natural underground hydrocarbon bearing formations using a gel similar to that of applicant to improve oil production. The court disagreed with the PTO's argument that the reference and claimed inventions were part of the same endeavor, "maximizing withdrawal of petroleum stored in petroleum reserves," and found that the inventions involved different fields of endeavor since the reference taught the use of the gel in a different structure for a different purpose under different temperature and pressure conditions, and since the application related to storage of liquid hydrocarbons rather than extraction of crude petroleum. The court also found the reference was not reasonably pertinent to the problem with which the inventor was concerned because a person having ordinary skill in the art would not reasonably have expected to solve the problem of dead volume in tanks for refined petroleum by considering a reference dealing with plugging underground formation anomalies.).

ANALOGY IN THE CHEMICAL ARTS

See, for example, *Ex parte Bland*, 3 USPQ2d 1103 (Bd. Pat App. & Inter. 1986) (Claims were drawn to a particulate composition useful as a preservative for an animal foodstuff (or a method of inhibiting fungus growth in an animal foodstuff therewith) comprising verxite having absorbed thereon propionic acid. All references were concerned with absorbing biologically active materials on carriers, and therefore the teachings in each of the various references would have been pertinent to the problems in the other references and the invention at hand.); *Stratoflex, Inc. v. Aeroquip Corp.*, 713 F.2d 1530, 218 USPQ 871 (Fed. Cir. 1983) (Problem confronting inventor was preventing electrostatic buildup in PTFE tubing caused by hydrocarbon fuel flow while precluding leakage of fuel. Two prior art references relied upon were in the rubber hose art, both referencing the problem of electrostatic buildup caused by fuel flow. The court found that because PTFE and rubber are used by the same hose manufacturers and experience the same and similar problems, a solution found for a problem experienced with either PTFE or rubber hosing would be looked to when facing a problem with the other.); *In re Mlot-Fijalkowski*, 676 F.2d 666, 213 USPQ 713 (CCPA 1982) (Problem faced by appellant was enhancement and immobilization of dye penetrant indications. References which taught the use of dyes and finely divided developer materials to produce colored images preferably in, but not limited to, the duplicating paper art were properly relied upon because the court found that appellant's problem was one of dye chemistry, and a search for its solution would include the dye arts in general.).

ANALOGY IN THE MECHANICAL ARTS

See, for example, *In re Oetiker*, 977 F.2d 1443, 24 USPQ2d 1443 (Fed. Cir. 1992) (Applicant claimed an improvement in a hose clamp which differed from the prior art in the presence of a preassembly "hook" which maintained the preassembly condition of the clamp and disengaged automatically when the clamp was tightened. The Board relied upon a reference which disclosed a hook and eye fastener for use in garments, reasoning that all hooking problems are analogous. The court held the reference was not within the field of applicant's endeavor, and was not reasonably pertinent to the particular problem with which the inventor was concerned because it had not been shown that a person of ordinary skill, seeking to solve a problem of fastening a hose clamp, would reasonably be expected or motivated to look to fasteners for garments. The Commissioner further argued in the brief on appeal that a disengageable catch is a common everyday mechanical concept, however the court held that the Commissioner did not explain why a "catch" of unstated structure is such a concept, and why it would have made the claimed invention obvious.). Compare *Stevenson v. International Trade Comm.*, 612 F.2d 546, 550, 204 USPQ 276, 280 (CCPA 1979) ("In a simple mechanical invention a broad spectrum of prior art must be explored and it is

reasonable to permit inquiry into other areas where one of ordinary skill in the art would be aware that similar problems exist.").

Also see *In re Deminski*, 796 F.2d 436, 230 USPQ 313 (Fed. Cir. 1986) (Applicant's claims related to double-acting high pressure gas transmission line compressors in which the valves could be removed easily for replacement. The Board relied upon references which taught either a double-acting piston pump or a double-acting piston compressor. The court agreed that since the cited pumps and compressors have essentially the same function and structure, the field of endeavor includes both types of double-action piston devices for moving fluids.); *Pentec, Inc. v. Graphic Controls Corp.*, 776 F.2d 309, 227 USPQ 766 (Fed. Cir. 1985) (Claims at issue were directed to an instrument marker pen body, the improvement comprising a pen arm holding means having an integrally molded hinged member for folding over against the pen body. Although the patent owners argued the hinge and fastener art was nonanalogous, the court held that the problem confronting the inventor was the need for a simple holding means to enable frequent, secure attachment and easy removal of a marker pen to and from a pen arm, and one skilled in the pen art trying to solve that problem would have looked to the fastener and hinge art.); and *Ex parte Goodyear Tire & Rubber Co.*, 230 USPQ 357 (Bd. Pat. App. & Inter. 1985) (A reference in the clutch art was held reasonably pertinent to the friction problem faced by applicant, whose claims were directed to a braking material, because brakes and clutches utilize interfacing materials to accomplish their respective purposes.).

ANALOGY IN THE ELECTRICAL ARTS

See, for example, *Wang Laboratories, Inc. v. Toshiba Corp.*, 993 F.2d 858, 26 USPQ2d 1767 (Fed. Cir. 1993) (Patent claims were directed to single in-line memory modules (SIMMs) for installation on a printed circuit motherboard for use in personal computers. Reference to a SIMM for an industrial controller was not necessarily in the same field of endeavor as the claimed subject matter merely because it related to memories. Reference was found to be in a different field of endeavor because it involved memory circuits in which modules of varying sizes may be added or replaced, whereas the claimed invention involved compact modular memories. Furthermore, since memory modules of the claims at issue were intended for personal computers and used dynamic random-access-memories, whereas reference SIMM was developed for use in large industrial machine controllers and only taught the use of static random-access-memories or read-only-memories, the finding that the reference was nonanalogous was supported by substantial evidence.); *Medtronic, Inc. v. Cardiac Pacemakers*, 721 F.2d 1563, 220 USPQ 97 (Fed. Cir. 1983) (Patent claims were drawn to a cardiac pacemaker which comprised, among other components, a runaway inhibitor means for preventing a pacemaker malfunction from causing pulses to be applied at too high a frequency rate. Two references disclosed circuits used in high power, high frequency devices which inhibited the runaway of pulses from a pulse source. The court held that one of ordinary skill in the pacemaker designer art faced with a rate-limiting problem would look to the solutions of others faced with rate limiting problems, and therefore the references were in an analogous art.).

EXAMPLES OF ANALOGY IN THE DESIGN ARTS

See MPEP § 1504.03 for a discussion of the relevant case law setting forth the general requirements for analogous art in design applications.

For examples of analogy in the design arts, see *In re Rosen*, 673 F.2d 388, 213 USPQ 347 (CCPA 1982) (The design at issue was a coffee table of contemporary styling. The court held designs of contemporary furniture other than coffee tables, such as the desk and circular glass table top designs of the references relied upon, would reasonably fall within the scope of the knowledge of the designer of ordinary skill.); *Ex parte Pappas*, 23 USPQ2d 1636 (Bd. Pat. App. & Inter. 1992) (At issue was an ornamental design for a feed bunk with an inclined corner configuration. Examiner relied upon references to a bunk lacking the inclined corners claimed by appellant and the *Architectural Precast Concrete Drafting Handbook*. The Board found the *Architectural Precast Concrete Drafting Handbook* was analogous art, noting that a bunk may be a wood or concrete trough, and that both references relied upon "disclose structures in which at least one upstanding leg is generally perpendicular to a base portion to define a corner configuration

between the leg and base portion."); *In re Butera,* 1 F.3d 1252, 28 USPQ2d 1399 (Fed. Cir. 1993) (unpublished - not citable as precedent) (The claimed invention, a spherical design for a combined insect repellant and air freshener, was rejected by the Board as obvious over a single reference to a design for a metal ball anode. The court reversed, holding the reference design to be nonanalogous art. "A prior design is of the type claimed if it has the same general use as that claimed in the design patent application . . . . One designing a combined insect repellant and air freshener would therefore not have reason to know of or look to a design for a metal ball anode." 28 USPQ2d at 1400.).

2141.02 Differences Between Prior Art and Claimed Invention

Ascertaining the differences between the prior art and the claims at issue requires interpreting the claim language, and considering both the invention and the prior art references as a whole. See MPEP § 2111 - § 2116.01 for case law pertaining to claim interpretation.

THE CLAIMED INVENTION AS A WHOLE MUST BE CONSIDERED

In determining the differences between the prior art and the claims, the question under 35 U.S.C. 103 is not whether the differences themselves would have been obvious, but whether the claimed invention as a whole would have been obvious. *Stratoflex, Inc. v. Aeroquip Corp.*, 713 F.2d 1530, 218 USPQ 871 (Fed. Cir. 1983); *Schenck v. Nortron Corp.*, 713 F.2d 782, 218 USPQ 698 (Fed. Cir. 1983) (Claims were directed to a vibratory testing machine (a hard-bearing wheel balancer) comprising a holding structure, a base structure, and a supporting means which form "a single integral and gaplessly continuous piece." *Nortron* argued the invention is just making integral what had been made in four bolted pieces, improperly limiting the focus to a structural difference from the prior art and failing to consider the invention as a whole. The prior art perceived a need for mechanisms to dampen resonance, whereas the inventor eliminated the need for dampening via the one-piece gapless support structure. "Because that insight was contrary to the understandings and expectations of the art, the structure effectuating it would not have been obvious to those skilled in the art." 713 F.2d at 785, 218 USPQ at 700 (citations omitted).).

See also *In re Hirao*, 535 F.2d 67, 190 USPQ 15 (CCPA 1976) (Claims were directed to a three step process for preparing sweetened foods and drinks. The first two steps were directed to a process of producing high purity maltose (the sweetener), and the third was directed to adding the maltose to foods and drinks. The parties agreed that the first two steps were unobvious but formed a known product and the third step was obvious. The Solicitor argued the preamble was directed to a process for preparing foods and drinks sweetened mildly and thus the specific method of making the high purity maltose (the first two steps in the claimed process) should not be given weight, analogizing with product-by-process claims. The court held "due to the admitted unobviousness of the first two steps of the claimed combination of steps, the subject matter as a whole would not have been obvious to one of ordinary skill in the art at the time the invention was made." 535 F.2d at 69, 190 USPQ at 17 (emphasis in original). The preamble only recited the purpose of the process and did not limit the body of the claim. Therefore, the claimed process was a three step process, not the product formed by two steps of the process or the third step of using that product.).

DISTILLING THE INVENTION DOWN TO A "GIST" OR "THRUST" OF AN INVENTION DISREGARDS "AS A WHOLE" REQUIREMENT

Distilling an invention down to the "gist" or "thrust" of an invention disregards the requirement of analyzing the subject matter "as a whole." *W.L. Gore & Associates, Inc. v. Garlock, Inc.*, 721 F.2d 1540, 220 USPQ 303 (Fed. Cir. 1983), *cert. denied,* 469 U.S. 851 (1984) (restricting consideration of the claims to a 10% per second rate of stretching of unsintered PTFE and disregarding other limitations resulted in treating claims as though they read differently than allowed); *Bausch & Lomb v. Barnes-Hind/ Hydrocurve, Inc.*, 796 F.2d 443, 447-49, 230 USPQ 416, 419-20 (Fed. Cir. 1986), *cert. denied*, 484 U.S. 823 (1987) (District court focused on the "concept of forming ridgeless depressions having smooth rounded edges using a laser beam to vaporize the material," but "disregarded express limitations that the product

be an ophthalmic lens formed of a transparent cross-linked polymer and that the laser marks be surrounded by a smooth surface of unsublimated polymer."). See also *Jones v. Hardy*, 727 F.2d 1524, 1530, 220 USPQ 1021, 1026 (Fed. Cir. 1984) ("treating the advantage as the invention disregards statutory requirement that the invention be viewed 'as a whole' "); *Panduit Corp. v. Dennison Mfg. Co.*, 810 F.2d 1561, 1 USPQ2d 1593 (Fed. Cir.), *cert. denied*, 481 U.S. 1052 (1987) (district court improperly distilled claims down to a one word solution to a problem).

DISCOVERING SOURCE/CAUSE OF A PROBLEM IS PART OF "AS A WHOLE" INQUIRY

"[A] patentable invention may lie in the discovery of the source of a problem even though the remedy may be obvious once the source of the problem is identified. This is part of the 'subject matter as a whole' which should always be considered in determining the obviousness of an invention under 35 U.S.C. § 103." *In re Sponnoble*, 405 F.2d 578, 585, 160 USPQ 237, 243 (CCPA 1969). However, "discovery of the cause of a problem . . does not always result in a patentable invention. . . . [A] different situation exists where the solution is obvious from prior art which contains the same solution for a similar problem." *In re Wiseman*, 596 F.2d 1019, 1022, 201 USPQ 658, 661 (CCPA 1979) (emphasis in original).

In *In re Sponnoble*, the claim was directed to a plural compartment mixing vial wherein a center seal plug was placed between two compartments for temporarily isolating a liquid-containing compartment from a solids-containing compartment. The claim differed from the prior art in the selection of butyl rubber with a silicone coating as the plug material instead of natural rubber. The prior art recognized that leakage from the liquid to the solids compartment was a problem, and considered the problem to be a result of moisture passing around the center plug because of microscopic fissures inherently present in molded or blown glass. The court found the inventor discovered the cause of moisture transmission was through the center plug, and there was no teaching in the prior art which would suggest the necessity of selecting applicant's plug material which was more impervious to liquids than the natural rubber plug of the prior art.

In *In re Wiseman*, 596 F.2d at 1022, 201 USPQ at 661, claims directed to grooved carbon disc brakes wherein the grooves were provided to vent steam or vapor during a braking action to minimize fading of the brakes were rejected as obvious over a reference showing carbon disc brakes without grooves in combination with a reference showing grooves in noncarbon disc brakes for the purpose of cooling the faces of the braking members and eliminating dust, thereby reducing fading of the brakes. The court affirmed the rejection, holding that even if applicants discovered the cause of a problem, the solution would have been obvious from the prior art which contained the same solution (inserting grooves in disc brakes) for a similar problem.

APPLICANTS ALLEGING DISCOVERY OF A SOURCE OF A PROBLEM MUST PROVIDE SUBSTANTIATING EVIDENCE

Applicants who allege they discovered the source of a problem must provide evidence substantiating the allegation, either by way of affidavits or declarations, or by way of a clear and persuasive assertion in the specification. *In re Wiseman*, 596 F.2d 1019, 201 USPQ 658 (CCPA 1979) (unsubstantiated statement of counsel was insufficient to show appellants discovered source of the problem); *In re Kaslow*, 707 F.2d 1366, 217 USPQ 1089 (Fed. Cir. 1983) (Claims were directed to a method for redeeming merchandising coupons which contain a UPC "5-by-5" bar code wherein, among other steps, the memory at each supermarket would identify coupons by manufacturer and transmit the data to a central computer to provide an audit thereby eliminating the need for clearinghouses and preventing retailer fraud. In challenging the propriety of an obviousness rejection, appellant argued he discovered the source of a problem (retailer fraud and manual clearinghouse operations) and its solution. The court found appellant's specification did not support the argument that he discovered the source of the problem with respect to retailer fraud, and that the claimed invention failed to solve the problem of manual clearinghouse operations.).

DISCLOSED INHERENT PROPERTIES ARE PART OF "AS A WHOLE" INQUIRY

"In determining whether the invention as a whole would have been obvious under 35 U.S.C. 103, we must first delineate the invention as a whole. In delineating the invention as a whole, we look not only to

the subject matter which is literally recited in the claim in question... but also to those properties of the subject matter which are inherent in the subject matter *and* are disclosed in the specification. . . Just as we look to a chemical and its properties when we examine the obviousness of a composition of matter claim, it is this invention *as a whole,* and not some part of it, which must be obvious under 35 U.S.C. 103." *In re Antonie*, 559 F.2d 618, 620, 195 USPQ 6,8 (CCPA 1977) (emphasis in original) (citations omitted) (The claimed wastewater treatment device had a tank volume to contractor area of 0.12 gal./sq. ft. The court found the invention as a whole was the ratio of 0.12 and its inherent property that the claimed devices maximized treatment capacity regardless of other variables in the devices. The prior art did not recognize that treatment capacity was a function of the tank volume to contractor ratio, and therefore the parameter optimized was not recognized in the art to be a result-effective variable.). See also *In re Papesch*, 315 F.2d 381, 391, 137 USPQ 43, 51 (CCPA 1963) ("From the standpoint of patent law, a compound and all its properties are inseparable.").

Obviousness cannot be predicated on what is not known at the time an invention is made, even if the inherency of a certain feature is later established. *In re Rijckaert*, 9 F.2d 1531, 28 USPQ2d 1955 (Fed. Cir. 1993). See MPEP § 2112 for the requirements of rejections based on inherency.

PRIOR ART MUST BE CONSIDERED IN ITS ENTIRETY, INCLUDING DISCLOSURES THAT TEACH AWAY FROM THE CLAIMS

A prior art reference must be considered in its entirety, i.e., as a whole, including portions that would lead away from the claimed invention. *W.L. Gore & Associates, Inc. v. Garlock, Inc.*, 721 F.2d 1540, 220 USPQ 303 (Fed. Cir. 1983), *cert. denied*, 469 U.S. 851 (1984) (Claims were directed to a process of producing a porous article by expanding shaped, unsintered, highly crystalline poly(tetrafluoroethylene) (PTFE) by stretching said PTFE at a 10% per second rate to more than five times the original length. The prior art teachings with regard to unsintered PTFE indicated the material does not respond to conventional plastics processing, and the material should be stretched slowly. A reference teaching rapid stretching of conventional plastic polypropylene with reduced crystallinity combined with a reference teaching stretching unsintered PTFE would not suggest rapid stretching of highly crystalline PTFE, in light of the disclosures in the art that teach away from the invention, i.e., that the conventional polypropylene should have reduced crystallinity before stretching, and that PTFE should be stretched slowly.).

2141.03 Level of Ordinary Skill in the Art

FACTORS TO CONSIDER IN DETERMINING LEVEL OF ORDINARY SKILL

"Factors that may be considered in determining level of ordinary skill in the art include (1) the educational level of the inventor; (2) type of problems encountered in the art; (3) prior art solutions to those problems; (4) rapidity with which innovations are made; (5) sophistication of the technology; and (6) educational level of active workers in the field." *Environmental Designs, Ltd. v. Union Oil Co.*, 713 F.2d 693, 696, 218 USPQ 865, 868 (Fed. Cir. 1983), *cert. denied*, 464 U.S. 1043 (1984).

The "hypothetical 'person having ordinary skill in the art' to which the claimed subject matter pertains would, of necessity have the capability of understanding the scientific and engineering principles applicable to the pertinent art." *Ex parte Hiyamizu*, 10 USPQ2d 1393, 1394 (Bd. Pat. App. & Inter. 1988) (The Board disagreed with the examiner's definition of one of ordinary skill in the art (a doctorate level engineer or scientist working at least 40 hours per week in semiconductor research or development), finding that the hypothetical person is not definable by way of credentials, and that the evidence in the application did not support the conclusion that such a person would require a doctorate or equivalent knowledge in science or engineering.).

References which do not qualify as prior art because they postdate the claimed invention may be relied upon to show the level of ordinary skill in the art at or around the time the invention was made. *Ex parte Erlich*, 22 USPQ 1463 (Bd. Pat. App. & Inter. 1992).

SPECIFYING A PARTICULAR LEVEL OF SKILL IS NOT NECESSARY WHERE THE PRIOR ART ITSELF REFLECTS AN APPROPRIATE LEVEL

If the only facts of record pertaining to the level of skill in the art are found within the prior art of record, the court has held that an invention may be held to have been obvious without a specific finding of a particular level of skill where the prior art itself reflects an appropriate level. *Chore-Time Equipment, Inc. v. Cumberland Corp.*, 713 F.2d 774, 218 USPQ 673 (Fed. Cir. 1983).

ASCERTAINING LEVEL OF ORDINARY SKILL IS NECESSARY TO MAINTAIN OBJECTIVITY

"The importance of resolving the level of ordinary skill in the art lies in the necessity of maintaining objectivity in the obviousness inquiry." *Ryko Mfg. Co. v. Nu-Star, Inc.*, 950 F.2d 714, 718, 21 USPQ2d 1053, 1057 (Fed. Cir. 1991). The examiner must ascertain what would have been obvious to one of ordinary skill in the art at the time the invention was made, and not to the inventor, a judge, a layman, those skilled in remote arts, or to geniuses in the art at hand. *Environmental Designs, Ltd. v. Union Oil Co.*, 713 F.2d 693, 218 USPQ 865 (Fed. Cir. 1983), *cert. denied*, 464 U.S. 1043 (1984).

2142 Legal Concept of *Prima Facie* Obviousness

The legal concept of *prima facie* obviousness is a procedural tool of examination which applies broadly to all arts. It allocates who has the burden of going forward with production of evidence in each step of the examination process. See *In re Rinehart*, 531 F.2d 1048, 189 USPQ 143 (CCPA 1976); *In re Linter*, 458 F.2d 1013, 173 USPQ 560 (CCPA 1972); *In re Saunders*, 444 F.2d 599, 170 USPQ 213 (CCPA 1971); *In re Tiffin*, 443 F.2d 394, 170 USPQ 88 (CCPA 1971), *amended*, 448 F.2d 791, 171 USPQ 294 (CCPA 1971); *In re Warner*, 379 F.2d 1011, 154 USPQ 173 (CCPA 1967), *cert. denied*, 389 U.S. 1057 (1968). The examiner bears the initial burden of factually supporting any *prima facie* conclusion of obviousness. If the examiner does not produce a *prima facie* case, the applicant is under no obligation to submit evidence of nonobviousness. If, however, the examiner does produce a *prima facie* case, the burden of coming forward with evidence or arguments shifts to the applicant who may submit additional evidence of nonobviousness, such as comparative test data showing that the claimed invention possesses improved properties not expected by the prior art. The initial evaluation of *prima facie* obviousness thus relieves both the examiner and applicant from evaluating evidence beyond the prior art and the evidence in the specification as filed until the art has been shown to suggest the claimed invention.

To reach a proper determination under 35 U.S.C. 103, the examiner must step backward in time and into the shoes worn by the hypothetical "person of ordinary skill in the art" when the invention was unknown and just before it was made. In view of all factual information, the examiner must then make a determination whether the claimed invention "as a whole" would have been obvious at that time to that person. Knowledge of applicant's disclosure must be put aside in reaching this determination, yet kept in mind in order to determine the "differences," conduct the search and evaluate the "subject matter as a whole" of the invention. The tendency to resort to "hindsight" based upon applicant's disclosure is often difficult to avoid due to the very nature of the examination process. However, impermissible hindsight must be avoided and the legal conclusion must be reached on the basis of the facts gleaned from the prior art.

ESTABLISHING A *PRIMA FACIE* CASE OF OBVIOUSNESS

To establish a *prima facie* case of obviousness, three basic criteria must be met. First, there must be some suggestion or motivation, either in the references themselves or in the knowledge generally available to one of ordinary skill in the art, to modify the reference or to combine reference teachings. Second, there must be a reasonable expectation of success. Finally, the prior art reference (or references when combined) must teach or suggest all the claim limitations. The teaching or suggestion to make the claimed combination and the reasonable expectation of success must both be found in the prior art, and not based on applicant's disclosure. *In re Vaeck*, 947 F.2d 488, 20 USPQ2d 1438 (Fed. Cir. 1991). See MPEP § 2143

- § 2143.03 for decisions pertinent to each of these criteria.

The initial burden is on the examiner to provide some suggestion of the desirability of doing what the inventor has done. "To support the conclusion that the claimed invention is directed to obvious subject matter, either the references must expressly or impliedly suggest the claimed invention or the examiner must present a convincing line of reasoning as to why the artisan would have found the claimed invention to have been obvious in light of the teachings of the references." *Ex parte Clapp*, 227 USPQ 972, 973 (Bd. Pat. App. & Inter. 1985). See MPEP § 2144 - § 2144.09 for examples of reasoning supporting obviousness rejections.

When the motivation to combine the teachings of the references is not immediately apparent, it is the duty of the examiner to explain why the combination of the teachings is proper. *Ex parte Skinner*, 2 USPQ2d 1788 (Bd. Pat. App. & Inter. 1986). A statement of a rejection that includes a large number of rejections must explain with reasonable specificity at least one rejection, otherwise the examiner procedurally fails to establish a *prima facie* case of obviousness. *Ex parte Blanc*, 13 USPQ2d 1383 (Bd. Pat. App. & Inter. 1989) (Rejection based on nine references which included at least 40 prior art rejections without explaining any one rejection with reasonable specificity was reversed as procedurally failing to establish a *prima facie* case of obviousness.).

If the examiner determines there is factual support for rejecting the claimed invention under 35 U.S.C. 103, the examiner must then consider any evidence supporting the patentability of the claimed invention, such as any evidence in the specification or any other evidence submitted by the applicant. The ultimate determination of patentability is based on the entire record, by a preponderance of evidence, with due consideration to the persuasiveness of any arguments and any secondary evidence. *In re Oetiker*, 977 F.2d 1443, 24 USPQ2d 1443 (Fed. Cir. 1992). The legal standard of "a preponderance of evidence" requires the evidence to be more convincing than the evidence which is offered in opposition to it. With regard to rejections under 35 U.S.C. 103, the examiner must provide evidence which as a whole shows that the legal determination sought to be proved (i.e., the reference teachings establish a *prima facie* case of obviousness) is more probable than not.

When an applicant submits evidence, whether in the specification as originally filed or in reply to a rejection, the examiner must reconsider the patentability of the claimed invention. The decision on patentability must be made based upon consideration of all the evidence, including the evidence submitted by the examiner and the evidence submitted by the applicant. A decision to make or maintain a rejection in the face of all the evidence must show that it was based on the totality of the evidence. Facts established by rebuttal evidence must be evaluated along with the facts on which the conclusion of obviousness was reached, not against the conclusion itself. *In re Eli Lilly & Co.*, 902 F.2d 943, 14 USPQ2d 1741 (Fed. Cir. 1990).

See *In re Piasecki*, 745 F.2d 1468, 223 USPQ 785 (Fed. Cir. 1984) for a discussion of the proper roles of the examiner's *prima facie* case and applicant's rebuttal evidence in the final determination of obviousness. See MPEP § 706.02(j) for a discussion of the proper contents of a rejection under 35 U.S.C. 103.

2143 Basic Requirements of a *Prima Facie* Case of Obviousness

To establish a *prima facie* case of obviousness, three basic criteria must be met. First, there must be some suggestion or motivation, either in the references themselves or in the knowledge generally available to one of ordinary skill in the art, to modify the reference or to combine reference teachings. Second, there must be a reasonable expectation of success. Finally, the prior art reference (or references when combined) must teach or suggest all the claim limitations.

The teaching or suggestion to make the claimed combination and the reasonable expectation of success must both be found in the prior art, not in applicant's disclosure. *In re Vaeck*, 947 F.2d 488, 20 USPQ2d 1438 (Fed. Cir. 1991).

2143.01 Suggestion or Motivation To Modify the References

THE PRIOR ART MUST SUGGEST THE DESIRABILITY OF THE CLAIMED INVENTION

"There are three possible sources for a motivation to combine references: the nature of the problem to be solved, the teachings of the prior art, and the knowledge of persons of ordinary skill in the art." *In re Rouffet,* 149 F.3d 1350, 1357, 47 USPQ2d 1453, 1457-58 (Fed. Cir. 1998) (The combination of the references taught every element of the claimed invention, however without a motivation to combine, a rejection based on a *prima facie* case of obvious was held improper.). The level of skill in the art cannot be relied upon to provide the suggestion to combine references. *Al-Site Corp. v. VSI Int'l Inc.*, 174 F.3d 1308, 50 USPQ2d 1161 (Fed. Cir. 1999).

"In determining the propriety of the Patent Office case for obviousness in the first instance, it is necessary to ascertain whether or not the reference teachings would appear to be sufficient for one of ordinary skill in the relevant art having the reference before him to make the proposed substitution, combination, or other modification." *In re Linter*, 458 F.2d 1013, 1016, 173 USPQ 560, 562 (CCPA 1972).

Obviousness can only be established by combining or modifying the teachings of the prior art to produce the claimed invention where there is some teaching, suggestion, or motivation to do so found either explicitly or implicitly in the references themselves or in the knowledge generally available to one of ordinary skill in the art. "The test for an implicit showing is what the combined teachings, knowledge of one of ordinary skill in the art, and the nature of the problem to be solved as a whole would have suggested to those of ordinary skill in the art." *In re Kotzab,* 217 F.3d 1365, 1370, 55 USPQ2d 1313, 1317 (Fed. Cir. 2000). See also *In re Fine*, 837 F.2d 1071, 5 USPQ2d 1596 (Fed. Cir. 1988); *In re Jones*, 958 F.2d 347, 21 USPQ2d 1941 (Fed. Cir. 1992).

In *In re Kotzab*, the claims were drawn to an injection molding method using a single temperature sensor to control a plurality of flow control valves. The primary reference disclosed a multizone device having multiple sensors, each of which controlled an associated flow control valve, and also taught that one *system* may be used to control a number of valves. The court found that there was insufficient evidence to show that one *system* was the same as one *sensor.* While the control of multiple valves by a single sensor rather than by multiple sensors was a "technologically simple concept," there was no finding "as to the specific understanding or principle within the knowledge of the skilled artisan" that would have provided the motivation to use a single sensor as the system to control more than one valve. 217 F.3d at 1371, 55 USPQ2d at 1318.

In *In re Fine*, the claims were directed to a system for detecting and measuring minute quantities on nitrogen compounds comprising a gas chromatograph, a converter which converts nitrogen compounds into nitric oxide by combustion, and a nitric oxide detector. The primary reference disclosed a system for monitoring sulfur compounds comprising a chromatograph, combustion means, and a detector, and the secondary reference taught nitric oxide detectors. The examiner and Board asserted that it would have been within the skill of the art to substitute one type of detector for another in the system of the primary reference, however the court found there was no support or explanation of this conclusion and reversed.

In *In re Jones*, the claimed invention was the 2-(2¢-aminoethoxy) ethanol salt of dicamba, a compound with herbicidal activity. The primary reference disclosed *inter alia* the substituted ammonium salts of dicamba as herbicides, however the reference did not specifically teach the claimed salt. Secondary references teaching the amine portion of the salt were directed to shampoo additives and a byproduct of the production of morpholine. The court found there was no suggestion to combine these references to arrive at the claimed invention.

WHERE THE TEACHINGS OF THE PRIOR ART CONFLICT, THE EXAMINER MUST WEIGH THE SUGGESTIVE POWER OF EACH REFERENCE

The test for obviousness is what the combined teachings of the references would have suggested to one of ordinary skill in the art, and all teachings in the prior art must be considered to the extent that they are in analogous arts. Where the teachings of two or more prior art references conflict, the examiner must weigh the power of each reference to suggest solutions to

one of ordinary skill in the art, considering the degree to which one reference might accurately discredit another. *In re Young*, 927 F.2d 588, 18 USPQ2d 1089 (Fed. Cir. 1991) (Prior art patent to Carlisle disclosed controlling and minimizing bubble oscillation for chemical explosives used in marine seismic exploration by spacing seismic sources close enough to allow the bubbles to intersect before reaching their maximum radius so the secondary pressure pulse was reduced. An article published several years later by Knudsen opined that the Carlisle technique does not yield appreciable improvement in bubble oscillation suppression. However, the article did not test the Carlisle technique under comparable conditions because Knudsen did not use Carlisle's spacing or seismic source. Furthermore, where the Knudsen model most closely approximated the patent technique there was a 30% reduction of the secondary pressure pulse. On these facts, the court found that the Knudsen article would not have deterred one of ordinary skill in the art from using the Carlisle patent teachings.).

FACT THAT REFERENCES CAN BE COMBINED OR MODIFIED IS NOT SUFFICIENT TO ESTABLISH *PRIMA FACIE* OBVIOUSNESS

The mere fact that references can be combined or modified does not render the resultant combination obvious unless the prior art also suggests the desirability of the combination. *In re Mills*, 916 F.2d 680, 16 USPQ2d 1430 (Fed. Cir. 1990) (Claims were directed to an apparatus for producing an aerated cementitious composition by drawing air into the cementitious composition by driving the output pump at a capacity greater than the feed rate. The prior art reference taught that the feed means can be run at a variable speed, however the court found that this does not require that the output pump be run at the claimed speed so that air is drawn into the mixing chamber and is entrained in the ingredients during operation. Although a prior art device "may be capable of being modified to run the way the apparatus is claimed, there must be a suggestion or motivation in the reference to do so." 916 F.2d at 682, 16 USPQ2d at 1432.). See also *In re Fritch*, 972 F.2d 1260, 23 USPQ2d 1780 (Fed. Cir. 1992) (flexible landscape edging device which is conformable to a ground surface of varying slope not suggested by combination of prior art references).

FACT THAT THE CLAIMED INVENTION IS WITHIN THE CAPABILITIES OF ONE OF ORDINARY SKILL IN THE ART IS NOT SUFFICIENT BY ITSELF TO ESTABLISH *PRIMA FACIE* OBVIOUSNESS

A statement that modifications of the prior art to meet the claimed invention would have been " 'well within the ordinary skill of the art at the time the claimed invention was made' " because the references relied upon teach that all aspects of the claimed invention were individually known in the art is not sufficient to establish a *prima facie* case of obviousness without some objective reason to combine the teachings of the references. *Ex parte Levengood*, 28 USPQ2d 1300 (Bd. Pat. App. & Inter. 1993). See also *In re Kotzab*, 217 F.3d 1365, 1371, 55 USPQ2d 1313, 1318 (Fed. Cir. 2000) (Court reversed obviousness rejection involving technologically simple concept because there was no finding as to the principle or specific understanding within the knowledge of a skilled artisan that would have motivated the skilled artisan to make the claimed invention); Al-Site Corp. v. VSI Int'l Inc., 174 F.3d 1308, 50 USPQ2d 1161 (Fed. Cir. 1999) (The level of skill in the art cannot be relied upon to provide the suggestion to combine references.).

THE PROPOSED MODIFICATION CANNOT RENDER THE PRIOR ART UNSATISFACTORY FOR ITS INTENDED PURPOSE

If proposed modification would render the prior art invention being modified unsatisfactory for its intended purpose, then there is no suggestion or motivation to make the proposed modification. *In re Gordon*, 733 F.2d 900, 221 USPQ 1125 (Fed. Cir. 1984) (Claimed device was a blood filter assembly for use during medical procedures wherein both the inlet and outlet for the blood were located at the bottom end of the filter assembly, and wherein a gas vent was present at the top of the filter assembly. The prior art reference taught a liquid strainer for removing dirt and water from gasoline and other light oils wherein the inlet and outlet were at the top of the device, and wherein a pet-cock (stopcock) was located at the bottom of the device for periodically removing the collected dirt and water. The reference further taught that the separation is assisted by gravity. The Board concluded the claims were *prima facie* obvious, reason-

ing that it would have been obvious to turn the reference device upside down. The court reversed, finding that if the prior art device was turned upside down it would be inoperable for its intended purpose because the gasoline to be filtered would be trapped at the top, the water and heavier oils sought to be separated would flow out of the outlet instead of the purified gasoline, and the screen would become clogged.).

"Although statements limiting the function or capability of a prior art device require fair consideration, simplicity of the prior art is rarely a characteristic that weighs against obviousness of a more complicated device with added function." *In re Dance*, 160 F.3d 1339, 1344, 48 USPQ2d 1635, 1638 (Fed. Cir. 1998) (Court held that claimed catheter for removing obstruction in blood vessels would have been obvious in view of a first reference which taught all of the claimed elements except for a "means for recovering fluid and debris" in combination with a second reference describing a catheter including that means. The court agreed that the first reference, which stressed simplicity of structure and taught emulsification of the debris, did not teach away from the addition of a channel for the recovery of the debris.).

THE PROPOSED MODIFICATION CANNOT CHANGE THE PRINCIPLE OF OPERATION OF A REFERENCE

If the proposed modification or combination of the prior art would change the principle of operation of the prior art invention being modified, then the teachings of the references are not sufficient to render the claims *prima facie* obvious. *In re Ratti*, 270 F.2d 810, 123 USPQ 349 (CCPA 1959) (Claims were directed to an oil seal comprising a bore engaging portion with outwardly biased resilient spring fingers inserted in a resilient sealing member. The primary reference relied upon in a rejection based on a combination of references disclosed an oil seal wherein the bore engaging portion was reinforced by a cylindrical sheet metal casing. Patentee taught the device required rigidity for operation, whereas the claimed invention required resiliency. The court reversed the rejection holding the "suggested combination of references would require a substantial reconstruction and redesign of the elements shown in [the primary reference] as well as a change in the basic principle under which the [primary reference] construction was designed to operate." 270 F.2d at 813, 123 USPQ at 352.).

2143.02 Reasonable Expectation of Success Is Required

OBVIOUSNESS REQUIRES ONLY A REASONABLE EXPECTATION OF SUCCESS

The prior art can be modified or combined to reject claims as *prima facie* obvious as long as there is a reasonable expectation of success. *In re Merck & Co., Inc.*, 800 F.2d 1091, 231 USPQ 375 (Fed. Cir. 1986) (Claims directed to a method of treating depression with amitriptyline (or nontoxic salts thereof) were rejected as *prima facie* obvious over prior art disclosures that amitriptyline is a compound known to possess psychotropic properties and that imipramine is a structurally similar psychotropic compound known to possess antidepressive properties, in view of prior art suggesting the aforementioned compounds would be expected to have similar activity because the structural difference between the compounds involves a known bioisosteric replacement and because a research paper comparing the pharmacological properties of these two compounds suggested clinical testing of amitriptyline as an antidepressant. The court sustained the rejection, finding that the teachings of the prior art provide a sufficient basis for a reasonable expectation of success.); *Ex parte Blanc*, 13 USPQ2d 1383 (Bd. Pat. App. & Inter. 1989) (Claims were directed to a process of sterilizing a polyolefinic composition with high-energy radiation in the presence of a phenolic polyester antioxidant to inhibit discoloration or degradation of the polyolefin. Appellant argued that it is unpredictable whether a particular antioxidant will solve the problem of discoloration or degradation. However, the Board found that because the prior art taught that appellant's preferred antioxidant is very efficient and provides better results compared with other prior art antioxidants, there would have been a reasonable expectation of success.).

AT LEAST SOME DEGREE OF PREDICTABILITY IS REQUIRED; APPLICANTS MAY PRESENT EVIDENCE SHOWING THERE WAS NO REASONABLE EXPECTATION OF SUCCESS

Obviousness does not require absolute predictability, however, at least some degree of predictability is required. Evidence showing there was no reasonable expectation of success may support a conclusion of nonobviousness. *In re Rinehart*, 531 F.2d 1048, 189 USPQ 143 (CCPA 1976) (Claims directed to a method for the commercial scale production of polyesters in the presence of a solvent at superatmospheric pressure were rejected as obvious over a reference which taught the claimed method at atmospheric pressure in view of a reference which taught the claimed process except for the presence of a solvent. The court reversed, finding there was no reasonable expectation that a process combining the prior art steps could be successfully scaled up in view of unchallenged evidence showing that the prior art processes individually could not be commercially scaled up successfully.). See also *Amgen, Inc. v. Chugai Pharmaceutical Co.*, 927 F.2d 1200, 1207-08, 18 USPQ2d 1016, 1022-23 (Fed. Cir.), *cert. denied*, 502 U.S. 856 (1991) (In the context of a biotechnology case, testimony supported the conclusion that the references did not show that there was a reasonable expectation of success.); *In re O'Farrell*, 853 F.2d 894, 903, 7 USPQ2d 1673, 1681 (Fed. Cir. 1988) (The court held the claimed method would have been obvious over the prior art relied upon because one reference contained a detailed enabling methodology, a suggestion to modify the prior art to produce the claimed invention, and evidence suggesting the modification would be successful.).

PREDICTABILITY IS DETERMINED AT THE TIME THE INVENTION WAS MADE

Whether an art is predictable or whether the proposed modification or combination of the prior art has a reasonable expectation of success is determined at the time the invention was made. *Ex parte Erlich*, 3 USPQ2d 1011 (Bd. Pat. App. & Inter. 1986) (Although an earlier case reversed a rejection because of unpredictability in the field of monoclonal antibodies, the court found "in this case at the time this invention was made, one of ordinary skill in the art would have been motivated to produce monoclonal antibodies specific for human fibroplast interferon using the method of [the prior art] with a reasonable expectation of success." 3 USPQ2d at 1016 (emphasis in original).).

2143.03 All Claim Limitations Must Be Taught or Suggested

To establish *prima facie* obviousness of a claimed invention, all the claim limitations must be taught or suggested by the prior art. *In re Royka*, 490 F.2d 981, 180 USPQ 580 (CCPA 1974). "All words in a claim must be considered in judging the patentability of that claim against the prior art." *In re Wilson*, 424 F.2d 1382, 1385, 165 USPQ 494, 496 (CCPA 1970). If an independent claim is nonobvious under 35 U.S.C. 103, then any claim depending therefrom is nonobvious. *In re Fine*, 837 F.2d 1071, 5 USPQ2d 1596 (Fed. Cir. 1988).

INDEFINITE LIMITATIONS MUST BE CONSIDERED

A claim limitation which is considered indefinite cannot be disregarded. If a claim is subject to more than one interpretation, at least one of which would render the claim unpatentable over the prior art, the examiner should reject the claim as indefinite under 35 U.S.C. 112, second paragraph (see MPEP § 706.03(d)) and should reject the claim over the prior art based on the interpretation of the claim that renders the prior art applicable. *Ex parte Ionescu*, 222 USPQ 537 (Bd. Pat. App. & Inter. 1984) (Claims on appeal were rejected on indefiniteness grounds only; the rejection was reversed and the case remanded to the examiner for consideration of pertinent prior art.). Compare *In re Wilson*, 424 F.2d 1382, 165 USPQ 494 (CCPA 1970) (if no reasonably definite meaning can be ascribed to certain claim language, the claim is indefinite, not obvious) and *In re Steele*, 305 F.2d 859,134 USPQ 292 (CCPA 1962) (it is improper to rely on speculative assumptions regarding the meaning of a claim and then base a rejection under 35 U.S.C. 103 on these assumptions).

LIMITATIONS WHICH DO NOT FIND SUPPORT IN THE ORIGINAL SPECIFICATION MUST BE CONSIDERED

When evaluating claims for obviousness under 35 U.S.C. 103, all the limitations of the claims must be considered and given weight, including limitations which do not find support in the specification as originally filed (i.e., new matter). *Ex parte Grasselli*, 231 USPQ 393 (Bd. App. 1983) *aff'd mem.* 738 F.2d 453 (Fed. Cir. 1984) (Claim to a catalyst expressly excluded the presence of sulfur, halogen, uranium, and a combination of vanadium and phosphorous. Although the negative limitations excluding these elements did not appear in the specification as filed, it was error to disregard these limitations when determining whether the claimed invention would have been obvious in view of the prior art.).

2144 Sources of Rationale Supporting a Rejection Under 35 U.S.C. 103

RATIONALE MAY BE IN A REFERENCE, OR REASONED FROM COMMON KNOWLEDGE IN THE ART, SCIENTIFIC PRINCIPLES, ART-RECOGNIZED EQUIVALENTS, OR LEGAL PRECEDENT

The rationale to modify or combine the prior art does not have to be expressly stated in the prior art; the rationale may be expressly or impliedly contained in the prior art or it may be reasoned from knowledge generally available to one of ordinary skill in the art, established scientific principles, or legal precedent established by prior case law. *In re Fine*, 837 F.2d 1071, 5 USPQ2d 1596 (Fed. Cir. 1988); *In re Jones*, 958 F.2d 347, 21 USPQ2d 1941 (Fed. Cir. 1992). See also *In re Kotzab*, 217 F.3d 1365, 1370, 55 USPQ2d 1313, 1317 (Fed. Cir. 2000) (setting forth test for implicit teachings); *In re Eli Lilly & Co.*, 902 F.2d 943, 14 USPQ2d 1741 (Fed. Cir. 1990) (discussion of reliance on legal precedent); *In re Nilssen*, 851 F.2d 1401, 1403, 7 USPQ2d 1500, 1502 (Fed. Cir. 1988) (references do not have to explicitly suggest combining teachings); *Ex parte Clapp*, 227 USPQ 972 (Bd. Pat. App. & Inter. 1985) (examiner must present convincing line of reasoning supporting rejection); and *Ex parte Levengood*, 28 USPQ2d 1300 (Bd. Pat. App. & Inter. 1993) (reliance on logic and sound scientific reasoning).

THE EXPECTATION OF SOME ADVANTAGE IS THE STRONGEST RATIONALE FOR COMBINING REFERENCES

The strongest rationale for combining references is a recognition, expressly or impliedly in the prior art or drawn from a convincing line of reasoning based on established scientific principles or legal precedent, that some advantage or expected beneficial result would have been produced by their combination. *In re Sernaker*, 702 F.2d 989, 994-95, 217 USPQ 1, 5-6 (Fed. Cir. 1983).

LEGAL PRECEDENT CAN PROVIDE THE RATIONALE SUPPORTING OBVIOUSNESS ONLY IF THE FACTS IN THE CASE ARE SUFFICIENTLY SIMILAR TO THOSE IN THE APPLICATION

The examiner must apply the law consistently to each application after considering all the relevant facts. If the facts in a prior legal decision are sufficiently similar to those in an application under examination, the examiner may use the rationale used by the court. If the applicant has demonstrated the criticality of a specific limitation, it would not be appropriate to rely solely on case law as the rationale to support an obviousness rejection. "The value of the exceedingly large body of precedent wherein our predecessor courts and this court have applied the law of obviousness to particular facts, is that there has been built a wide spectrum of illustrations and accompanying reasoning, that have been melded into a fairly consistent application of law to a great variety of facts." *In re Eli Lilly & Co.*, 902 F.2d 943, 14 USPQ2d 1741 (Fed. Cir. 1990).

RATIONALE DIFFERENT FROM APPLICANT'S IS PERMISSIBLE

The reason or motivation to modify the reference may often suggest what the inventor has done, but for a different purpose or to solve a different problem. It is not necessary that the prior art suggest the combination to achieve the same advantage or result discovered by applicant. *In re Linter*, 458 F.2d 1013, 173 USPQ 560 (CCPA 1972) (discussed below); *In re Dillon*, 919 F.2d 688, 16 USPQ2d 1897 (Fed. Cir. 1990), *cert. denied*, 500 U.S. 904 (1991) (discussed below). Although *Ex parte Levengood*, 28 USPQ2d

1300, 1302 (Bd. Pat. App. & Inter. 1993) states that obviousness cannot be established by combining references "without also providing evidence of the motivating force which would impel one skilled in the art to do what the patent applicant has done" (emphasis added), reading the quotation in context it is clear that while there must be motivation to make the claimed invention, there is no requirement that the prior art provide the same reason as the applicant to make the claimed invention.

In *In re Linter* the claimed invention was a laundry composition consisting essentially of a dispersant, cationic fabric softener, sugar, sequestering phosphate, and brightener in specified proportions. The claims were rejected over the combination of a primary reference which taught all the claim limitations except for the presence of sugar, and secondary references which taught the addition of sugar as a filler or weighting agent in compositions containing cationic fabric softeners. Appellant argued that in the claimed invention, the sugar is responsible for the compatibility of the cationic softener with the other detergent components. The court sustained the rejection, stating "The fact that appellant uses sugar for a different purpose does not alter the conclusion that its use in a prior art composition would be [sic, would have been] *prima facie* obvious from the purpose disclosed in the references." 173 USPQ at 562.

In *In re Dillon*, applicant claimed a composition comprising a hydrocarbon fuel and a sufficient amount of a tetra-orthoester of a specified formula to reduce the particulate emissions from the combustion of the fuel. The claims were rejected as obvious over a reference which taught hydrocarbon fuel compositions containing tri-orthoesters for dewatering fuels, in combination with a reference teaching the equivalence of tri-orthoesters and tetra-orthoesters as water scavengers in hydraulic (nonhydrocarbon) fluids. The Board affirmed the rejection finding "there was a 'reasonable expectation' that the tri- and tetra-orthoester fuel compositions would have similar properties based on 'close structural and chemical similarity' between the tri- and tetra-orthoesters and the fact that both the prior art and Dillon use these compounds 'as fuel additives'." 919 F.2d at 692, 16 USPQ2d at 1900. The court held "it is not necessary in order to establish a *prima facie* case of obviousness . . . that there be a suggestion or expectation from *the prior art* that the claimed [invention] will have the same or a similar utility as *one newly discovered by applicant*," and concluded that here a *prima facie* case was established because "[t]he art provided the motivation to make the claimed compositions in the expectation that they would have similar properties." 919 F.2d at 693, 16 USPQ2d at 1901 (emphasis in original).

See MPEP § 2145, paragraph II for case law pertaining to the presence of additional advantages or latent properties not recognized in the prior art.

2144.01 Implicit Disclosure

"[I]n considering the disclosure of a reference, it is proper to take into account not only specific teachings of the reference but also the inferences which one skilled in the art would reasonably be expected to draw therefrom." *In re Preda*, 401 F.2d 825, 826, 159 USPQ 342, 344 (CCPA 1968) (A process for catalytically producing carbon disulfide by reacting sulfur vapor and methane in the presence of charcoal at a temperature of "about 750-830°C" was found to be met by a reference which expressly taught the same process at 700°C because the reference recognized the possibility of using temperatures greater than 750°C. The reference disclosed that catalytic processes for converting methane with sulfur vapors into carbon disulfide at temperatures greater than 750°C (albeit without charcoal) was known, and that 700°C was "much lower than had previously proved feasible."); *In re Lamberti*, 545 F.2d 747, 750, 192 USPQ 278, 280 (CCPA 1976) (Reference disclosure of a compound where the R-S-R¢ portion has "at least one methylene group attached to the sulfur atom" implies that the other R group attached to the sulfur atom can be other than methylene and therefore suggests asymmetric dialkyl moieties.).

2144.02 Reliance on Scientific Theory

The rationale to support a rejection under 35 U.S.C. 103 may rely on logic and sound scientific principle. *In re Soli*, 317 F.2d 941, 137 USPQ 797 (CCPA 1963). However, when an examiner relies on a scientific theory, evidentiary support for the existence and meaning of that theory must be provided. *In re Grose*, 592 F.2d 1161, 201 USPQ 57 (CCPA 1979) (Court held that different crystal forms of zeolites would not have been structurally obvious one from the other because there was no chemical theory supporting such

a conclusion. The known chemical relationship between structurally similar compounds (homologs, analogs, isomers) did not support a finding of *prima facie* obviousness of claimed zeolite over the prior art because a zeolite is not a compound but a mixture of compounds related to each other by a particular crystal structure.). Although the theoretical mechanism of an invention may be explained by logic and sound scientific reasoning, this fact does not support an obviousness determination unless logic and scientific reasoning would have led one of ordinary skill in the art to make the claimed invention. *Ex parte Levengood*, 28 USPQ2d 1300 (Bd. Pat. App. & Inter. 1993).

2144.03 Reliance on Common Knowledge in the Art or "Well Known" Prior Art

The rationale supporting an obviousness rejection may be based on common knowledge in the art or "well-known" prior art. The examiner may take official notice of facts outside of the record which are capable of instant and unquestionable demonstration as being "well-known" in the art. *In re Ahlert*, 424 F.2d 1088, 1091, 165 USPQ 418, 420 (CCPA 1970) (Board properly took judicial notice that "it is common practice to postheat a weld after the welding operation is completed" and that "it is old to adjust the intensity of a flame in accordance with the heat requirements."). See also *In re Seifreid*, 407 F.2d 897, 160 USPQ 804 (CCPA 1969) (Examiner's statement that polyethylene terephthalate films are commonly known to be shrinkable is a statement of common knowledge in the art, supported by the references of record.).

If justified, the examiner should not be obliged to spend time to produce documentary proof. If the knowledge is of such notorious character that official notice can be taken, it is sufficient so to state. *In re Malcolm*, 129 F.2d 529, 54 USPQ 235 (CCPA 1942). If the applicant traverses such an assertion the examiner should cite a reference in support of his or her position.

When a rejection is based on facts within the personal knowledge of the examiner, the data should be stated as specifically as possible, and the facts must be supported, when called for by the applicant, by an affidavit from the examiner. Such an affidavit is subject to contradiction or explanation by the affidavits of the applicant and other persons. See 37 CFR 1.104(d)(2).

Applicant must seasonably challenge well known statements and statements based on personal knowledge when they are made by the Board of Patent Appeals and Interferences. *In re Selmi*, 156 F.2d 96, 70 USPQ 197 (CCPA 1946); *In re Fischer*, 125 F.2d 725, 52 USPQ 473 (CCPA 1942). See also *In re Boon*, 439 F.2d 724, 169 USPQ 231 (CCPA 1971) (a challenge to the taking of judicial notice must contain adequate information or argument to create on its face a reasonable doubt regarding the circumstances justifying the judicial notice).

For further views on official notice, see *In re Ahlert*, 424 F.2d 1088, 1091, 165 USPQ 418, 420-421 (CCPA 1970) ("[A]ssertions of technical facts in areas of esoteric technology must always be supported by citation of some reference work" and "allegations concerning specific 'knowledge' of the prior art, which might be peculiar to a particular art should also be supported." Furthermore the applicant must be given the opportunity to challenge the correctness of such assertions and allegations. "The facts so noticed serve to 'fill the gaps' which might exist in the evidentiary showing" and should not comprise the principle evidence upon which a rejection is based.). See also *In re Barr*, 444 F.2d 588, 170 USPQ 330 (CCPA 1971) (scientific journal references were not used as a basis for taking judicial notice that controverted phrases were art-recognized because the court was not sure that the meaning of the term at issue was indisputable among reasonable men); and *In re Eynde*, 480 F.2d 1364, 1370, 178 USPQ 470, 474 (CCPA 1973) ("The facts constituting the state of the art are normally subject to the possibility of rational disagreement among reasonable men and are not amenable to the taking of [judicial] notice.").

If applicant does not seasonably traverse the well known statement during examination, then the object of the well known statement is taken to be admitted prior art. *In re Chevenard*, 139 F.2d 71, 60 USPQ 239 (CCPA 1943). A seasonable challenge constitutes a demand for evidence made as soon as practicable during prosecution. Thus, applicant is charged with rebutting the well known statement in the next reply after the Office action in which the well known statement was made. This is necessary because the examiner must be given the opportunity to provide

evidence in the next Office action or explain why no evidence is required. If the examiner adds a reference to the rejection in the next action after applicant's rebuttal, the newly cited reference, if it is added merely as evidence of the prior well known statement, does not result in a new issue and thus the action can potentially be made final. If no amendments are made to the claims, the examiner must not rely on any other teachings in the reference if the rejection is made final.

2144.04 Legal Precedent as Source of Supporting Rationale

As discussed in MPEP § 2144, if the facts in a prior legal decision are sufficiently similar to those in an application under examination, the examiner may use the rationale used by the court. Examples directed to various common practices which the court has held normally require only ordinary skill in the art and hence are considered routine expedients are discussed below. If the applicant has demonstrated the criticality of a specific limitation, it would not be appropriate to rely solely on case law as the rationale to support an obviousness rejection.

I. AESTHETIC DESIGN CHANGES

In re Seid, 161 F.2d 229, 73 USPQ 431 (CCPA 1947) (Claim was directed to an advertising display device comprising a bottle and a hollow member in the shape of a human figure from the waist up which was adapted to fit over and cover the neck of the bottle, wherein the hollow member and the bottle together give the impression of a human body. Appellant argued that certain limitations in the upper part of the body, including the arrangement of the arms, were not taught by the prior art. The court found that matters relating to ornamentation only which have no mechanical function cannot be relied upon to patentably distinguish the claimed invention from the prior art.). But see *In re Dembiczak*, 175 F.3d 994, 50 USPQ2d 1614 (Fed. Cir. 1999) (The claims of a utility application, drawn to a generally round, orange plastic trash bag with a jack-o-lantern face, were rejected under 35 U.S.C. 103. However, the court reversed the rejection for lack of motivation to combine conventional trash bags with a reference showing a jack-o-lantern face on an orange paper bag stuffed with newspapers.); Ex parte Hilton, 148 USPQ 356 (Bd. App. 1965) (Claims were directed to fried potato chips with a specified moisture and fat content, whereas the prior art was directed to french fries having a higher moisture content. While recognizing that in some cases the particular shape of a product is of no patentable significance, the Board held in this case the shape (chips) is important because it results in a product which is distinct from the reference product (french fries).).

II. ELIMINATION OF A STEP OR AN ELEMENT AND ITS FUNCTION

A. Omission of an Element and Its Function Is Obvious If the Function of the Element Is Not Desired

Ex parte Wu, 10 USPQ 2031 (Bd. Pat. App. & Inter. 1989) (Claims at issue were directed to a method for inhibiting corrosion on metal surfaces using a composition consisting of epoxy resin, petroleum sulfonate, and hydrocarbon diluent. The claims were rejected over a primary reference which disclosed an anticorrosion composition of epoxy resin, hydrocarbon diluent, and polybasic acid salts wherein said salts were taught to be beneficial when employed in a freshwater environment, in view of secondary references which clearly suggested the addition of petroleum sulfonate to corrosion inhibiting compositions. The Board affirmed the rejection, holding that it would have been obvious to omit the polybasic acid salts of the primary reference where the function attributed to such salt is not desired or required, such as in compositions for providing corrosion resistance in environments which do not encounter fresh water.). See also *In re Larson*, 340 F.2d 965, 144 USPQ 347 (CCPA 1965) (Omission of additional framework and axle which served to increase the cargo carrying capacity of prior art mobile fluid carrying unit would have been obvious if this feature was not desired.); and *In re Kuhle*, 526 F.2d 553, 188 USPQ 7 (CCPA 1975) (deleting a prior art switch member and thereby eliminating its function was an obvious expedient).

B. Omission of an Element with Retention of the Element's Function Is an Indicia of Unobviousness

Note that the omission of an element and retention of its function is an indicia of unobviousness. *In re*

Edge, 359 F.2d 896, 149 USPQ 556 (CCPA 1966) (Claims at issue were directed to a printed sheet having a thin layer of erasable metal bonded directly to the sheet wherein said thin layer obscured the original print until removal by erasure. The prior art disclosed a similar printed sheet which further comprised an intermediate transparent and erasure-proof protecting layer which prevented erasure of the printing when the top layer was erased. The claims were found unobvious over the prior art because the although the transparent layer of the prior art was eliminated, the function of the transparent layer was retained since appellant's metal layer could be erased without erasing the printed indicia.).

III. AUTOMATING A MANUAL ACTIVITY

In re Venner, 262 F.2d 91, 95, 120 USPQ 193, 194 (CCPA 1958) (Appellant argued that claims to a permanent mold casting apparatus for molding trunk pistons were allowable over the prior art because the claimed invention combined "old permanent-mold structures together with a timer and solenoid which automatically actuates the known pressure valve system to release the inner core after a predetermined time has elapsed." The court held that broadly providing an automatic or mechanical means to replace a manual activity which accomplished the same result is not sufficient to distinguish over the prior art.).

IV. CHANGES IN SIZE, SHAPE, OR SEQUENCE OF ADDING INGREDIENTS

A. *Changes in Size/Proportion*

In re Rose, 220 F.2d 459, 105 USPQ 237 (CCPA 1955) (Claims directed to a lumber package "of appreciable size and weight requiring handling by a lift truck" where held unpatentable over prior art lumber packages which could be lifted by hand because limitations relating to the size of the package were not sufficient to patentably distinguish over the prior art.); *In re Rinehart*, 531 F.2d 1048, 189 USPQ 143 (CCPA 1976) ("mere scaling up of a prior art process capable of being scaled up, if such were the case, would not establish patentability in a claim to an old process so scaled." 531 F.2d at 1053, 189 USPQ at 148.).

In *Gardner v. TEC Systems, Inc.*, 725 F.2d 1338, 220 USPQ 777 (Fed. Cir. 1984), *cert. denied*, 469 U.S. 830, 225 USPQ 232 (1984), the Federal Circuit held that, where the only difference between the prior art and the claims was a recitation of relative dimensions of the claimed device and a device having the claimed relative dimensions would not perform differently than the prior art device, the claimed device was not patentably distinct from the prior art device.

B. *Changes in Shape*

In re Dailey, 357 F.2d 669, 149 USPQ 47 (CCPA 1966) (The court held that the configuration of the claimed disposable plastic nursing container was a matter of choice which a person of ordinary skill in the art would have found obvious absent persuasive evidence that the particular configuration of the claimed container was significant.).

C. *Changes in Sequence of Adding Ingredients*

Ex parte Rubin, 128 USPQ 440 (Bd. App. 1959) (Prior art reference disclosing a process of making a laminated sheet wherein a base sheet is first coated with a metallic film and thereafter impregnated with a thermosetting material was held to render *prima facie* obvious claims directed to a process of making a laminated sheet by reversing the order of the prior art process steps.). See also *In re Burhans*, 154 F.2d 690, 69 USPQ 330 (CCPA 1946) (selection of any order of performing process steps is *prima facie* obvious in the absence of new or unexpected results); *In re Gibson*, 39 F.2d 975, 5 USPQ 230 (CCPA 1930) (Selection of any order of mixing ingredients is *prima facie* obvious.).

V. MAKING PORTABLE, INTEGRAL, SEPARABLE, ADJUSTABLE, OR CONTINUOUS

A. *Making Portable*

In re Lindberg, 194 F.2d 732, 93 USPQ 23 (CCPA 1952) (Fact that a claimed device is portable or movable is not sufficient by itself to patentably distinguish over an otherwise old device unless there are new or unexpected results.).

B. *Making Integral*

In re Larson, 340 F.2d 965, 968, 144 USPQ 347, 349 (CCPA 1965) (A claim to a fluid transporting vehicle was rejected as obvious over a prior art reference which differed from the prior art in claiming a

brake drum integral with a clamping means, whereas the brake disc and clamp of the prior art comprise several parts rigidly secured together as a single unit. The court affirmed the rejection holding, among other reasons, "that the use of a one piece construction instead of the structure disclosed in [the prior art] would be merely a matter of obvious engineering choice."); but see *Schenck v. Nortron Corp.*, 713 F.2d 782, 218 USPQ 698 (Fed. Cir. 1983) (Claims were directed to a vibratory testing machine (a hard-bearing wheel balancer) comprising a holding structure, a base structure, and a supporting means which form "a single integral and gaplessly continuous piece." Nortron argued that the invention is just making integral what had been made in four bolted pieces. The court found this argument unpersuasive and held that the claims were patentable because the prior art perceived a need for mechanisms to dampen resonance, whereas the inventor eliminated the need for dampening via the one-piece gapless support structure, showing insight that was contrary to the understandings and expectations of the art.).

C. *Making Separable*

In re Dulberg, 289 F.2d 522, 523, 129 USPQ 348, 349 (CCPA 1961) (The claimed structure, a lipstick holder with a removable cap, was fully met by the prior art except that in the prior art the cap is "press fitted" and therefore not manually removable. The court held that "if it were considered desirable for any reason to obtain access to the end of [the prior art's] holder to which the cap is applied, it would be obvious to make the cap removable for that purpose.").

D. *Making Adjustable*

In re Stevens, 212 F.2d 197, 101 USPQ 284 (CCPA 1954) (Claims were directed to a handle for a fishing rod wherein the handle has a longitudinally adjustable finger hook, and the hand grip of the handle connects with the body portion by means of a universal joint. The court held that adjustability, where needed, is not a patentable advance, and because there was an art-recognized need for adjustment in a fishing rod, the substitution of a universal joint for the single pivot of the prior art would have been obvious.).

E. *Making Continuous*

In re Dilnot, 319 F.2d 188, 138 USPQ 248 (CCPA 1963) (Claim directed to a method of producing a cementitious structure wherein a stable air foam is introduced into a slurry of cementitious material differed from the prior art only in requiring the addition of the foam to be continuous. The court held the claimed continuous operation would have been obvious in light of the batch process of the prior art.).

VI. REVERSAL, DUPLICATION, OR REARRANGEMENT OF PARTS

A. *Reversal of Parts*

In re Gazda, 219 F.2d 449, 104 USPQ 400 (CCPA 1955) (Prior art disclosed a clock fixed to the stationary steering wheel column of an automobile while the gear for winding the clock moves with steering wheel; mere reversal of such movement, so the clock moves with wheel, was held to be an obvious expedient.).

B. *Duplication of Parts*

In re Harza, 274 F.2d 669, 124 USPQ 378 (CCPA 1960) (Claims at issue were directed to a water-tight masonry structure wherein a water seal of flexible material fills the joints which form between adjacent pours of concrete. The claimed water seal has a "web" which lies perpendicular to the workface and in the joint, and a plurality of "ribs" which are parallel to the workface, forming the following shape:

(I)

The prior art disclosed a flexible water stop for preventing passage of water between masses of concrete in the shape of a plus sign (+). Although the reference did not disclose a plurality of ribs, the court held that mere duplication of parts has no patentable significance unless a new and unexpected result is produced.).

C. *Rearrangement of Parts*

In re Japikse, 181 F.2d 1019, 86 USPQ 70 (CCPA 1950) (Claims to a hydraulic power press which read on the prior art except with regard to the position of the starting switch were held unpatentable because shifting the position of the starting switch would not have modified the operation of the device.); *In re*

Kuhle, 526 F.2d 553, 188 USPQ 7 (CCPA 1975) (the particular placement of a contact in a conductivity measuring device was held to be an obvious matter of design choice). However, "The mere fact that a worker in the art could rearrange the parts of the reference device to meet the terms of the claims on appeal is not by itself sufficient to support a finding of obviousness. The prior art must provide a motivation or reason for the worker in the art, without the benefit of appellant's specification, to make the necessary changes in the reference device." *Ex parte Chicago Rawhide Mfg. Co.*, 223 USPQ 351, 353 (Bd. Pat. App. & Inter. 1984).

VII. PURIFYING AN OLD PRODUCT

Pure materials are novel *vis-à-vis* less pure or impure materials because there is a difference between pure and impure materials. Therefore, the issue is whether claims to a pure material are unobvious over the prior art. *In re Bergstrom*, 427 F.2d 1394, 166 USPQ 256 (CCPA 1970). Purer forms of known products may be patentable, but the mere purity of a product, by itself, does not render the product unobvious. *Ex parte Gray*, 10 USPQ2d 1922 (Bd. Pat. App. & Inter. 1989).

Factors to be considered in determining whether a purified form of an old product is obvious over the prior art include whether the claimed chemical compound or composition has the same utility as closely related materials in the prior art, and whether the prior art suggests the particular form or structure of the claimed material or suitable methods of obtaining that form or structure. *In re Cofer*, 354 F.2d 664, 148 USPQ 268 (CCPA 1966) (Claims to the free-flowing crystalline form of a compound were held unobvious over references disclosing the viscous liquid form of the same compound because the prior art of record did not suggest the claimed compound in crystalline form or how to obtain such crystals.).

See also *Ex parte Stern*, 13 USPQ2d 1379 (Bd. Pat. App. & Inter. 1987) (Claims to interleukin 2 (a protein with a molecular weight of over 12,000) purified to homogeneity were held unpatentable over references which recognized the desirability of purifying interleukin 2 to homogeneity in a view of a reference which taught a method of purifying proteins having molecular weights in excess of 12,000 to homogeneity wherein the prior art method was similar to the method disclosed by appellant for purifying interleukin 2.).

Compare *Ex parte Gray*, 10 USPQ2d 1922 (Bd. Pat. App. & Inter. 1989) (Claims were directed to human nerve growth factor b-NGF free from other proteins of human origin, and the specification disclosed making the claimed factor through the use of recombinant DNA technology. The claims were rejected as *prima facie* obvious in view of two references disclosing b-NGF isolated from human placental tissue. The Board applied case law pertinent to product-by-process claims, reasoning that the prior art factor appeared to differ from the claimed factor only in the method of obtaining the factor. The Board held that the burden of persuasion was on appellant to show that the claimed product exhibited unexpected properties compared with that of the prior art. The Board further noted that "no objective evidence has been provided establishing that no method was known to those skilled in this field whereby the claimed material might have been synthesized." 10 USPQ2d at 1926.).

2144.05 Obviousness of Ranges

See MPEP § 2131.03 for case law pertaining to rejections based on the anticipation of ranges under 35 U.S.C. 102 and 35 U.S.C. 102/103.

I. OVERLAP OF RANGES

In the case where the claimed ranges "overlap or lie inside ranges disclosed by the prior art" a *prima facie* case of obviousness exists. *In re Wertheim*, 541 F.2d 257, 191 USPQ 90 (CCPA 1976); *In re Woodruff*, 919 F.2d 1575, 16 USPQ2d 1934 (Fed. Cir. 1990) (The prior art taught carbon monoxide concentrations of "about 1-5%" while the claim was limited to "more than 5%." The court held that "about 1-5%" allowed for concentrations slightly above 5% thus the ranges overlapped.); *In re Geisler*, 116 F.3d 1465, 1469-71, 43 USPQ2d 1362, 1365-66 (Fed. Cir. 1997) (Claim reciting thickness of a protective layer as falling within a range of "50 to 100 Angstroms" considered *prima facie* obvious in view of prior art reference teaching that "for suitable protection, the thickness of the protective layer should be not less than about 10 nm [i.e., 100 Angstroms]." The court stated that "by stating that 'suitable protection' is provided if the protective layer is 'about' 100 Angstroms thick, [the

prior art reference] directly teaches the use of a thickness within [applicant's] claimed range."). Similarly, a *prima facie* case of obviousness exists where the claimed ranges and prior art ranges do not overlap but are close enough that one skilled in the art would have expected them to have the same properties. *Titanium Metals Corp. of America v. Banner*, 778 F.2d 775, 227 USPQ 773 (Fed. Cir. 1985) (Court held as proper a rejection of a claim directed to an alloy of "having 0.8% nickel, 0.3% molybdenum, up to 0.1% iron, balance titanium" as obvious over a reference disclosing alloys of 0.75% nickel, 0.25% molybdenum, balance titanium and 0.94% nickel, 0.31% molybdenum, balance titanium.).

II. OPTIMIZATION OF RANGES

A. *Optimization Within Prior Art Conditions or Through Routine Experimentation*

Generally, differences in concentration or temperature will not support the patentability of subject matter encompassed by the prior art unless there is evidence indicating such concentration or temperature is critical. "[W]here the general conditions of a claim are disclosed in the prior art, it is not inventive to discover the optimum or workable ranges by routine experimentation." *In re Aller*, 220 F.2d 454, 456, 105 USPQ 233, 235 (CCPA 1955) (Claimed process which was performed at a temperature between 40°C and 80°C and an acid concentration between 25% and 70% was held to be *prima facie* obvious over a reference process which differed from the claims only in that the reference process was performed at a temperature of 100°C and an acid concentration of 10%.). See also *In re Hoeschele*, 406 F.2d 1403, 160 USPQ 809 (CCPA 1969) (Claimed elastomeric polyurethanes which fell within the broad scope of the references were held to be unpatentable thereover because, among other reasons, there was no evidence of the criticality of the claimed ranges of molecular weight or molar proportions.). For more recent cases applying this principle, see *Merck & Co. Inc. v. Biocraft Laboratories Inc.*, 874 F.2d 804, 10 USPQ2d 1843 (Fed. Cir.), *cert. denied*, 493 U.S. 975 (1989); *In re Kulling*, 897 F.2d 1147, 14 USPQ2d 1056 (Fed. Cir. 1990); and *In re Geisler*, 116 F.3d 1465, 43 USPQ2d 1362 (Fed. Cir. 1997).

B. *Only Result-Effective Variables Can Be Optimized*

A particular parameter must first be recognized as a result-effective variable, i.e., a variable which achieves a recognized result, before the determination of the optimum or workable ranges of said variable might be characterized as routine experimentation. *In re Antonie*, 559 F.2d 618, 195 USPQ 6 (CCPA 1977) (The claimed wastewater treatment device had a tank volume to contractor area of 0.12 gal./sq. ft. The prior art did not recognize that treatment capacity is a function of the tank volume to contractor ratio, and therefore the parameter optimized was not recognized in the art to be a result- effective variable.). See also *In re Boesch*, 617 F.2d 272, 205 USPQ 215 (CCPA 1980) (prior art suggested proportional balancing to achieve desired results in the formation of an alloy).

III. REBUTTAL OF *PRIMA FACIE* CASE OF OBVIOUSNESS

Applicants can rebut a *prima facie* case of obviousness based on overlapping ranges by showing the criticality of the claimed range. "The law is replete with cases in which the difference between the claimed invention and the prior art is some range or other variable within the claims. . . . In such a situation, the applicant must show that the particular range is critical, generally by showing that the claimed range achieves unexpected results relative to the prior art range." *In re Woodruff*, 919 F.2d 1575, 16 USPQ2d 1934 (Fed. Cir. 1990). See MPEP § 716.02 - § 716.02(g) for a discussion of criticality and unexpected results.

A *prima facie* case of obviousness may also be rebutted by showing that the art, in any material respect, teaches away from the claimed invention. *In re Geisler*, 116 F.3d 1465, 1471, 43 USPQ2d 1362, 1366 (Fed. Cir. 1997) (Applicant argued that the prior art taught away from use of a protective layer for a reflective article having a thickness within the claimed range of "50 to 100 Angstroms." Specifically, a patent to Zehender, which was relied upon to reject applicant's claim, included a statement that the thickness of the protective layer "should be not less than about [100 Angstroms]." The court held that the patent did not teach away from the claimed invention. "Zehender suggests that there are benefits to be derived from keeping the protective layer as thin as

possible, consistent with achieving adequate protection. A thinner coating reduces light absorption and minimizes manufacturing time and expense. Thus, while Zehender expresses a preference for a thicker protective layer of 200-300 Angstroms, at the same time it provides the motivation for one of ordinary skill in the art to focus on thickness levels at the bottom of Zehender's 'suitable' range- about 100 Angstroms- and to explore thickness levels below that range. The statement in Zehender that '[i]n general, the thickness of the protective layer should be not less than about [100 Angstroms]' falls far short of the kind of teaching that would discourage one of skill in the art from fabricating a protective layer of 100 Angstroms or less. [W]e are therefore 'not convinced that there was a sufficient teaching away in the art to overcome [the] strong case of obviousness' made out by Zehender."). See MPEP § 2145, paragraph X.D., for a discussion of "teaching away" references.

2144.06 Art Recognized Equivalence for the Same Purpose

COMBINING EQUIVALENTS KNOWN FOR THE SAME PURPOSE

"It is *prima facie* obvious to combine two compositions each of which is taught by the prior art to be useful for the same purpose, in order to form a third composition to be used for the very same purpose.... [T]he idea of combining them flows logically from their having been individually taught in the prior art." *In re Kerkhoven*, 626 F.2d 846, 850, 205 USPQ 1069, 1072 (CCPA 1980) (citations omitted) (Claims to a process of preparing a spray-dried detergent by mixing together two conventional spray-dried detergents were held to be *prima facie* obvious.). See also *In re Crockett*, 279 F.2d 274, 126 USPQ 186 (CCPA 1960) (Claims directed to a method and material for treating cast iron using a mixture comprising calcium carbide and magnesium oxide were held unpatentable over prior art disclosures that the aforementioned components individually promote the formation of a nodular structure in cast iron.); and *Ex parte Quadranti*, 25 USPQ2d 1071 (Bd. Pat. App. & Inter. 1992) (mixture of two known herbicides held *prima facie* obvious). But see *In re Geiger*, 815 F.2d 686, 2 USPQ2d 1276 (Fed. Cir. 1987) ("Based upon the prior art and the fact that each of the three components of the composition used in the claimed method is conventionally employed in the art for treating cooling water systems, the board held that it would have been *prima facie* obvious, within the meaning of 35 U.S.C. 103, to employ these components in combination for their known functions and to optimize the amount of each additive.... Appellant argues... hindsight reconstruction or at best,... 'obvious to try'.... We agree with appellant.").

SUBSTITUTING EQUIVALENTS KNOWN FOR THE SAME PURPOSE

In order to rely on equivalence as a rationale supporting an obviousness rejection, the equivalency must be recognized in the prior art, and cannot be based on applicant's disclosure or the mere fact that the components at issue are functional or mechanical equivalents. *In re Ruff*, 256 F.2d 590, 118 USPQ 340 (CCPA 1958) (The mere fact that components are claimed as members of a Markush group cannot be relied upon to establish the equivalency of these components. However, an applicant's expressed recognition of an art-recognized or obvious equivalent may be used to refute an argument that such equivalency does not exist.); *In re Scott*, 323 F.2d 1016, 139 USPQ 297 (CCPA 1963) (Claims were drawn to a hollow fiberglass shaft for archery and a process for the production thereof where the shaft differed from the prior art in the use of a paper tube as the core of the shaft as compared with the light wood or hardened foamed resin core of the prior art. The Board found the claimed invention would have been obvious, reasoning that the prior art foam core is the functional and mechanical equivalent of the claimed paper core. The court reversed, holding that components which are functionally or mechanically equivalent are not necessarily obvious in view of one another, and in this case, the use of a light wood or hardened foam resin core does not fairly suggest the use of a paper core.); *Smith v. Hayashi*, 209 USPQ 754 (Bd. of Pat. Inter. 1980) (The mere fact that phthalocyanine and selenium function as equivalent photoconductors in the claimed environment was not sufficient to establish that one would have been obvious over the other. However, there was evidence that both phthalocyanine and selenium were known photoconductors in the art of electrophotography. "This, in our view, presents strong evidence of obviousness in substituting one for the

other in an electrophotographic environment as a photoconductor." 209 USPQ at 759.).

An express suggestion to substitute one equivalent component or process for another is not necessary to render such substitution obvious. *In re Fout*, 675 F.2d 297, 213 USPQ 532 (CCPA 1982).

2144.07 Art Recognized Suitability for an Intended Purpose

The selection of a known material based on its suitability for its intended use supported a *prima facie* obviousness determination in *Sinclair & Carroll Co. v. Interchemical Corp.*, 325 U.S. 327, 65 USPQ 297 (1945) (Claims to a printing ink comprising a solvent having the vapor pressure characteristics of butyl carbitol so that the ink would not dry at room temperature but would dry quickly upon heating were held invalid over a reference teaching a printing ink made with a different solvent that was nonvolatile at room temperature but highly volatile when heated in view of an article which taught the desired boiling point and vapor pressure characteristics of a solvent for printing inks and a catalog teaching the boiling point and vapor pressure characteristics of butyl carbitol. "Reading a list and selecting a known compound to meet known requirements is no more ingenious than selecting the last piece to put in the last opening in a jig-saw puzzle." 325 U.S. at 335, 65 USPQ at 301.).

See also *In re Leshin*, 227 F.2d 197, 125 USPQ 416 (CCPA 1960) (selection of a known plastic to make a container of a type made of plastics prior to the invention was held to be obvious); *Ryco, Inc. v. Ag-Bag Corp.*, 857 F.2d 1418, 8 USPQ2d 1323 (Fed. Cir. 1988) (Claimed agricultural bagging machine, which differed from a prior art machine only in that the brake means were hydraulically operated rather than mechanically operated, was held to be obvious over the prior art machine in view of references which disclosed hydraulic brakes for performing the same function, albeit in a different environment.).

2144.08 Obviousness of Species When Prior Art Teaches Genus

I. GUIDELINES FOR THE EXAMINATION OF CLAIMS DIRECTED TO SPECIES OF CHEMICAL COMPOSITIONS BASED UPON A SINGLE PRIOR ART REFERENCE

These "Genus-Species Guidelines" are to assist Office personnel in the examination of applications which contain claims to species or a subgenus of chemical compositions for compliance with 35 U.S.C. 103 based upon a single prior art reference which discloses a genus encompassing the claimed species or subgenus but does not expressly disclose the particular claimed species or subgenus. Office personnel should attempt to find additional prior art to show that the differences between the prior art primary reference and the claimed invention as a whole would have been obvious. Where such additional prior art is not found, Office personnel should follow these guidelines to determine whether a single reference 35 U.S.C. 103 rejection would be appropriate. The guidelines are based on the Office's current understanding of the law and are believed to be fully consistent with binding precedent of the Supreme Court, the Federal Circuit, and the Federal Circuit's predecessor courts.

The analysis of the guidelines begins at the point during examination after a single prior art reference is found disclosing a genus encompassing the claimed species or subgenus. Before reaching this point, Office personnel should follow appropriate antecedent examination procedures. Accordingly, Office personnel should first analyze the claims as a whole in light of and consistent with the written description, considering all claim limitations. When evaluating the scope of a claim, every limitation in the claim must be considered. See, e.g., *In re Ochiai*, 71 F.3d 1565, 1572, 37 USPQ2d 1127, 1133 (Fed. Cir. 1995). However, the claimed invention may not be dissected into discrete elements to be analyzed in isolation, but must be considered as a whole. See, e.g., *W.L. Gore & Assoc., Inc. v. Garlock, Inc.*, 721 F.2d 1540, 1548, 220 USPQ 303, 309 (Fed. Cir. 1983); *Jones v. Hardy*, 727 F.2d 1524, 1530, 220 USPQ 1021, 1026 (Fed. Cir. 1983) ("treating the advantage as the invention disregards the statutory requirement that the invention be viewed 'as a whole'"). Next, Office personnel should conduct a thorough search of the prior art and identify all relevant references. Both claimed and unclaimed aspects of the invention should be searched if there is a reasonable expectation that the unclaimed aspects may be later claimed. If the most relevant prior art

consists of a single prior art reference disclosing a genus encompassing the claimed species or subgenus, Office personnel should follow the guidelines set forth herein.

These guidelines do not constitute substantive rulemaking and hence do not have the force and effect of law. Rather, they are to assist Office personnel in analyzing claimed subject matter for compliance with substantive law. Thus, rejections must be based upon the substantive law, and it is these rejections which are appealable, not any failure by Office personnel to follow these guidelines.

Office personnel are to rely on these guidelines in the event of any inconsistent treatment of issues between these guidelines and any earlier provided guidance from the Office.

II. DETERMINE WHETHER THE CLAIMED SPECIES OR SUBGENUS WOULD HAVE BEEN OBVIOUS TO ONE OF ORDINARY SKILL IN THE PERTINENT ART AT THE TIME THE INVENTION WAS MADE

The patentability of a claim to a specific compound or subgenus embraced by a prior art genus should be analyzed no differently than any other claim for purposes of 35 U.S.C. 103. "The section 103 requirement of unobviousness is no different in chemical cases than with respect to other categories of patentable inventions." *In re Papesch*, 315 F.2d 381, 385, 137 USPQ 43, 47 (CCPA 1963). A determination of patentability under 35 U.S.C. 103 should be made upon the facts of the particular case in view of the totality of the circumstances. See, e.g., *In re Dillon*, 919 F.2d 688, 692-93, 16 USPQ2d 1897, 1901 (Fed. Cir. 1990) (*in banc*). Use of *per se* rules by Office personnel is improper for determining whether claimed subject matter would have been obvious under 35 U.S.C. 103. See, e.g., *In re Brouwer*, 77 F.3d 422, 425, 37 USPQ2d 1663, 1666 (Fed. Cir. 1996); *In re Ochiai*, 71 F.3d 1565, 1572, 37 USPQ2d 1127, 1133 (Fed. Cir. 1995); *In re Baird*, 16 F.3d 380, 382, 29 USPQ2d 1550, 1552 (Fed. Cir. 1994). The fact that a claimed species or subgenus is encompassed by a prior art genus is not sufficient by itself to establish a *prima facie* case of obviousness. *In re Baird*, 16 F.3d 380, 382, 29 USPQ2d 1550, 1552 (Fed. Cir. 1994) ("The fact that a claimed compound may be encompassed by a disclosed generic formula does not by itself render that compound obvious."); *In re Jones*, 958 F.2d 347, 350, 21 USPQ2d 1941, 1943 (Fed. Cir. 1992) (Federal Circuit has "decline[d] to extract from *Merck* [*& Co. v. Biocraft Laboratories Inc.*, 874 F.2d 804, 10 USPQ2d 1843 (Fed. Cir. 1989)] the rule that... regardless of how broad, a disclosure of a chemical genus renders obvious any species that happens to fall within it."). See also *In re Deuel*, 51 F.3d 1552, 1559, 34 USPQ2d 1210, 1215 (Fed. Cir. 1995).

A proper obviousness analysis involves a three-step process. First, Office personnel should establish a *prima facie* case of unpatentability considering the factors set out by the Supreme Court in *Graham v. John Deere*. See, e.g., *In re Bell*, 991 F.2d 781, 783, 26 USPQ2d 1529, 1531 (Fed. Cir. 1993) ("The PTO bears the burden of establishing a case of *prima facie* obviousness."); *In re Rijckaert*, 9 F.3d 1531, 1532, 28 USPQ2d 1955, 1956 (Fed. Cir. 1993); *In re Oetiker*, 977 F.2d 1443, 1445, 24 USPQ2d 1443, 1444 (Fed. Cir. 1992). *Graham v. John Deere Co.*, 383 U.S. 1, 17-18 (1966), requires that to make out a case of obviousness, one must:

(A) determine the scope and contents of the prior art;

(B) ascertain the differences between the prior art and the claims in issue;

(C) determine the level of skill in the pertinent art; and

(D) evaluate any evidence of secondary considerations. If a *prima facie* case is established, the burden shifts to applicant to come forward with rebuttal evidence or argument to overcome the *prima facie* case.

If a *prima facie* case is established, the burden shifts to applicant to come forward with rebuttal evidence or argument to overcome the *prima facie* case. See, e.g., *Bell*, 991 F.2d at 783-84, 26 USPQ2d at 1531; *Rijckaert*, 9 F.3d at 1532, 28 USPQ2d at 1956; *Oetiker*, 977 F.2d at 1445, 24 USPQ2d at 1444. Finally, Office personnel should evaluate the totality of the facts and all of the evidence to determine whether they still support a conclusion that the claimed invention would have been obvious to one of ordinary skill in the art at the time the invention was made. *Id.*

A. *Establishing a Prima Facie Case of Obviousness*

To establish a *prima facie* case of obviousness in a genus-species chemical composition situation, as in any other 35 U.S.C. 103 case, it is essential that Office personnel find some motivation or suggestion to make the claimed invention in light of the prior art teachings. See, e.g., *In re Brouwer*, 77 F.3d 422, 425, 37 USPQ2d 1663, 1666 (Fed. Cir. 1996) ("[T]he mere possibility that one of the esters or the active methylene group-containing compounds... could be modified or replaced such that its use would lead to the specific sulfoalkylated resin recited in claim 8 does not make the process recited in claim 8 obvious 'unless the prior art suggested the desirability of [such a] modification' or replacement.") (quoting *In re Gordon*, 733 F.2d 900, 902, 221 USPQ 1125, 1127 (Fed. Cir. 1984)); *In re Vaeck*, 947 F.2d 488, 493, 20 USPQ2d 1438, 1442 (Fed. Cir. 1991) ("[A] proper analysis under § 103 requires, *inter alia*, consideration of... whether the prior art would have suggested to those of ordinary skill in the art that they should make the claimed composition or device, or carry out the claimed process."). In order to find such motivation or suggestion there should be a reasonable likelihood that the claimed invention would have the properties disclosed by the prior art teachings. The prior art disclosure may be express, implicit, or inherent. Regardless of the type of disclosure, the prior art must provide some motivation to one of ordinary skill in the art to make the claimed invention in order to support a conclusion of obviousness. See, e.g., *Vaeck*, 947 F.2d at 493, 20 USPQ2d at 1442 (A proper obviousness analysis requires consideration of "whether the prior art would also have revealed that in so making or carrying out [the claimed invention], those of ordinary skill would have a reasonable expectation of success."); *In re Dow Chemical Co.*, 837 F.2d 469, 473, 5 USPQ2d 1529, 1531 (Fed. Cir. 1988) ("The consistent criterion for determination of obviousness is whether the prior art would have suggested to one of ordinary skill in the art that this process should be carried out and would have a reasonable likelihood of success, viewed in the light of the prior art."); *Hodosh v. Block Drug Co.*, 786 F.2d 1136, 1143 n.5, 229 USPQ 182, 187 n.5 (Fed. Cir. 1986). These disclosed findings should be made with a complete understanding of the first three "Graham factors." When evidence of secondary considerations such as unexpected results is initially before the Office, for example in the specification, that evidence should be considered in deciding whether there is a *prima facie* case of obviousness. The determination as to whether a *prima facie* case exists should be made on the full record before the Office at the time of the determination. Thus, Office personnel should:

(A) determine the "scope and content of the prior art";

(B) ascertain the "differences between the prior art and the claims at issue"; and

(C) determine "the level of ordinary skill in the pertinent art."

Graham v. John Deere, 383 U.S. 1, 17, 148 USPQ 459, 467 (1966). *Accord*, e.g., *In re Paulsen*, 30 F.3d 1475, 1482, 31 USPQ2d 1671, 1676 (Fed. Cir. 1994).

1. Determine the Scope and Content of the Prior Art

As an initial matter, Office personnel should determine the scope and content of the relevant prior art. Each reference must qualify as prior art under 35 U.S.C. 102 (e.g., *Panduit Corp. v. Dennison Mfg. Co.*, 810 F.2d 1561, 1568, 1 USPQ2d 1593, 1597 (Fed. Cir. 1987) ("Before answering *Graham's* 'content' inquiry, it must be known whether a patent or publication is in the prior art under 35 U.S.C. § 102.")) and should be in the field of applicant's endeavor, or be reasonably pertinent to the particular problem with which the inventor was concerned. *In re Oetiker*, 977 F.2d 1443, 1447, 24 USPQ2d 1443, 1445 (Fed. Cir. 1992). *Accord*, e.g., *In re Clay*, 966 F.2d 656, 658-59, 23 USPQ2d 1058, 1060 (Fed. Cir. 1992).

In the case of a prior art reference disclosing a genus, Office personnel should make findings as to:

(A) the structure of the disclosed prior art genus and that of any expressly described species or subgenus within the genus;

(B) any physical or chemical properties and utilities disclosed for the genus, as well as any suggested limitations on the usefulness of the genus, and any problems alleged to be addressed by the genus;

(C) the predictability of the technology; and

(D) the number of species encompassed by the genus taking into consideration all of the variables possible.

2. Ascertain the Differences Between the Closest Disclosed Prior Art Species or Subgenus of Record and the Claimed Species or Subgenus

Once the structure of the disclosed prior art genus and that of any expressly described species or subgenus within the genus are identified, Office personnel should compare it to the claimed species or subgenus to determine the differences. Through this comparison, the closest disclosed species or subgenus in the prior art reference should be identified and compared to that claimed. Office personnel should make explicit findings on the similarities and differences between the closest disclosed prior art species or subgenus of record and the claimed species or subgenus including findings relating to similarity of structure, chemical properties and utilities. In *Stratoflex, Inc. v. Aeroquip Corp.*, 713 F.2d 1530, 1537, 218 USPQ 871, 877 (Fed. Cir. 1983), the Court noted that "the question under 35 U.S.C. § 103 is not whether the differences [between the claimed invention and the prior art] would have been obvious" but "whether the claimed invention *as a whole* would have been obvious." (emphasis in original).

3. Determine the Level of Skill in the Art

Office personnel should evaluate the prior art from the standpoint of the hypothetical person having ordinary skill in the art at the time the claimed invention was made. See, *Ryko Mfg. Co. v. Nu-Star Inc.*, 950 F.2d 714, 718, 21 USPQ2d 1053, 1057 (Fed. Cir. 1991) ("The importance of resolving the level of ordinary skill in the art lies in the necessity of maintaining objectivity in the obviousness inquiry."); *Uniroyal Inc. v. Rudkin-Wiley Corp.*, 837 F.2d 1044, 1050, 5 USPQ2d 1434, 1438 (Fed. Cir. 1988) (evidence must be viewed from position of ordinary skill, not of an expert). In most cases, the only facts of record pertaining to the level of skill in the art will be found within the prior art reference. However, any additional evidence presented by applicant should be evaluated.

4. Determine Whether One of Ordinary Skill in the Art Would Have Been Motivated To Select the Claimed Species or Subgenus

In light of the findings made relating to the three *Graham* factors, Office personnel should determine whether one of ordinary skill in the relevant art would have been motivated to make the claimed invention as a whole, i.e., to select the claimed species or subgenus from the disclosed prior art genus. See, e.g., *Ochiai*, 71 F.3d at 1569-70, 37 USPQ2d at 1131; *Deuel*, 51 F.3d at 1557, 34 USPQ2d at 1214 ("[A] *prima facie* case of unpatentability requires that the teachings of the prior art suggest *the claimed compounds* to a person of ordinary skill in the art." (emphasis in original)); *Jones*, 958 F.2d at 351, 21 USPQ2d at 1943-44 (Fed. Cir. 1992); *Dillon*, 919 F.2d at 692, 16 USPQ2d at 1901; *In re Lalu*, 747 F.2d 703, 705, 223 USPQ 1257, 1258 (Fed. Cir. 1984) ("The prior art must provide one of ordinary skill in the art the motivation to make the proposed molecular modifications needed to arrive at the claimed compound."). See also *In re Kemps*, 97 F.3d 1427, 1430, 40 USPQ2d 1309, 1311 (Fed. Cir. 1996) (discussing motivation to combine). To address this key issue, Office personnel should consider all relevant prior art teachings, focusing on the following, where present.

(a) Consider the Size of the Genus

Consider the size of the prior art genus, bearing in mind that size alone cannot support an obviousness rejection. See, e.g., *Baird*, 16 F.3d at 383, 29 USPQ2d at 1552 (observing that "it is not the mere number of compounds in this limited class which is significant here but, rather, the total circumstances involved"). There is no absolute correlation between the size of the prior art genus and a conclusion of obviousness. *Id.* Thus, the mere fact that a prior art genus contains a small number of members does not create a *per se* rule of obviousness. Some motivation to select the claimed species or subgenus must be taught by the prior art. See, e.g., *Deuel*, 51 F.3d at 1558-59, 34 USPQ2d at 1215 ("No particular one of these DNAs can be obvious unless there is something in the prior art to lead to the particular DNA and indicate that it should be prepared."); *Baird*, 16 F.3d at 382-83, 29 USPQ2d at 1552; *Bell*, 991 F.2d at 784, 26 USPQ2d at 1531 ("Absent anything in the cited

prior art suggesting which of the 10^{36} possible sequences suggested by Rinderknecht corresponds to the IGF gene, the PTO has not met its burden of establishing that the prior art would have suggested the claimed sequences."). However, a genus may be so small that, when considered in light of the totality of the circumstances, it would anticipate the claimed species or subgenus. For example, it has been held that a prior art genus containing only 20 compounds and a limited number of variations in the generic chemical formula inherently anticipated a claimed species within the genus because "one skilled in [the] art would... envisage *each member*" of the genus. *In re Petering*, 301 F.2d 676, 681, 133 USPQ 275, 280 (CCPA 1962) (emphasis in original). More specifically, the court in *Petering* stated:

> A simple calculation will show that, excluding isomerism within certain of the R groups, the limited class we find in Karrer contains only 20 compounds. However, we wish to point out that it is not the mere number of compounds in this limited class which is significant here but, rather, the total circumstances involved, including such factors as the limited number of variations for R, only two alternatives for Y and Z, no alternatives for the other ring positions, and a large unchanging parent structural nucleus. With these circumstances in mind, it is our opinion that Karrer has described to those with ordinary skill in this art each of the various permutations here involved as fully as if he had drawn each structural formula or had written each name.

Id. (emphasis in original). *Accord In re Schaumann*, 572 F.2d 312, 316, 197 USPQ 5, 9 (CCPA 1978) (prior art genus encompassing claimed species which disclosed preference for lower alkyl secondary amines and properties possessed by the claimed compound constituted description of claimed compound for purposes of 35 U.S.C. 102(b)). *C.f., In re Ruschig*, 343 F.2d 965, 974, 145 USPQ 274, 282 (CCPA 1965) (Rejection of claimed compound in light of prior art genus based on *Petering* is not appropriate where the prior art does not disclose a small recognizable class of compounds with common properties.).

(b) Consider the Express Teachings

If the prior art reference expressly teaches a particular reason to select the claimed species or subgenus, Office personnel should point out the express disclosure which would have motivated one of ordinary skill in the art to select the claimed invention. An express teaching may be based on a statement in the prior art reference such as an art recognized equivalence. For example, see *Merck & Co. v. Biocraft Labs.*, 874 F.2d 804, 807, 10 USPQ2d 1843, 1846 (Fed. Cir. 1989) (holding claims directed to diuretic compositions comprising a specific mixture of amiloride and hydrochlorothiazide were obvious over a prior art reference expressly teaching that amiloride was a pyrazinoylguanidine which could be coadministered with potassium excreting diuretic agents, including hydrochlorothiazide which was a named example, to produce a diuretic with desirable sodium and potassium eliminating properties). See also, *In re Kemps*, 97 F.3d 1427, 1430, 40 USPQ2d 1309, 1312 (Fed. Cir. 1996) (holding there is sufficient motivation to combine teachings of prior art to achieve claimed invention where one reference specifically refers to the other).

(c) Consider the Teachings of Structural Similarity

Consider any teachings of a "typical," "preferred," or "optimum" species or subgenus within the disclosed genus. If such a species or subgenus is structurally similar to that claimed, its disclosure may motivate one of ordinary skill in the art to choose the claimed species or subgenus from the genus, based on the reasonable expectation that structurally similar species usually have similar properties. See, e.g., *Dillon*, 919 F.2d at 693, 696, 16 USPQ2d at 1901, 1904. See also *Deuel*, 51 F.3d at 1558, 34 USPQ2d at 1214 ("Structural relationships may provide the requisite motivation or suggestion to modify known compounds to obtain new compounds. For example, a prior art compound may suggest its homologs because homologs often have similar properties and therefore chemists of ordinary skill would ordinarily contemplate making them to try to obtain compounds with improved properties."). The utility of such properties will normally provide some motivation to make the claimed species or subgenus. *Id.*

In making an obviousness determination, Office personnel should consider the number of variables which must be selected or modified, and the nature and significance of the differences between the prior art and the claimed invention. See, e.g., *In re Jones*, 958 F.2d 347, 350, 21 USPQ2d 1941, 1943 (Fed. Cir. 1992) (reversing obviousness rejection of novel

dicamba salt with acyclic structure over broad prior art genus encompassing claimed salt, where disclosed examples of genus were dissimilar in structure, lacking an ether linkage or being cyclic); *In re Susi*, 440 F.2d 442, 445, 169 USPQ 423, 425 (CCPA 1971) (the difference from the particularly preferred subgenus of the prior art was a hydroxyl group, a difference conceded by applicant "to be of little importance"). In the area of biotechnology, an exemplified species may differ from a claimed species by a conservative substitution ("the replacement in a protein of one amino acid by another, chemically similar, amino acid... [which] is generally expected to lead to either no change or only a small change in the properties of the protein." *Dictionary of Biochemistry and Molecular Biology* 97 (John Wiley & Sons, 2d ed. 1989)). The effect of a conservative substitution on protein function depends on the nature of the substitution and its location in the chain. Although at some locations a conservative substitution may be benign, in some proteins only one amino acid is allowed at a given position. For example, the gain or loss of even one methyl group can destabilize the structure if close packing is required in the interior of domains. James Darnell *et al.*, *Molecular Cell Biology* 51 (2d ed. 1990).

The closer the physical and chemical similarities between the claimed species or subgenus and any exemplary species or subgenus disclosed in the prior art, the greater the expectation that the claimed subject matter will function in an equivalent manner to the genus. See, e.g., *Dillon*, 919 F.2d at 696, 16 USPQ2d at 1904 (and cases cited therein). *Cf. Baird*, 16 F.3d at 382-83, 29 USPQ2d at 1552 (disclosure of dissimilar species can provide teaching away).

Similarly, consider any teaching or suggestion in the reference of a preferred species or subgenus that is significantly different in structure from the claimed species or subgenus. Such a teaching may weigh against selecting the claimed species or subgenus and thus against a determination of obviousness. *Baird*, 16 F.3d at 382-83, 29 USPQ2d at 1552 (reversing obviousness rejection of species in view of large size of genus and disclosed "optimum" species which differed greatly from and were more complex than the claimed species); *Jones*, 958 F.2d at 350, 21 USPQ2d at 1943 (reversing obviousness rejection of novel dicamba salt with acyclic structure over broad prior art genus encompassing claimed salt, where disclosed examples of genus were dissimilar in structure, lacking an ether linkage or being cyclic). For example, teachings of preferred species of a complex nature within a disclosed genus may motivate an artisan of ordinary skill to make similar complex species and thus teach away from making simple species within the genus. *Baird*, 16 F.3d at 382, 29 USPQ2d at 1552. See also *Jones*, 958 F.2d at 350, 21 USPQ2d at 1943 (disclosed salts of genus held not sufficiently similar in structure to render claimed species *prima facie* obvious).

Concepts used to analyze the structural similarity of chemical compounds in other types of chemical cases are equally useful in analyzing genus-species cases. For example, a claimed tetra-orthoester fuel composition was held to be obvious in light of a prior art tri-orthoester fuel composition based on their structural and chemical similarity and similar use as fuel additives. *Dillon*, 919 F.2d at 692-93, 16 USPQ2d at 1900-02. Likewise, claims to amitriptyline used as an antidepressant were held obvious in light of the structural similarity to imipramine, a known antidepressant prior art compound, where both compounds were tricyclic dibenzo compounds and differed structurally only in the replacement of the unsaturated carbon atom in the center ring of amitriptyline with a nitrogen atom in imipramine. *In re Merck & Co.*, 800 F.2d 1091, 1096-97, 231 USPQ 375, 378-79 (Fed. Cir. 1986). Other structural similarities have been found to support a *prima facie* case of obviousness. See, e.g., *In re May*, 574 F.2d 1082, 1093-95, 197 USPQ 601, 610-11 (CCPA 1978) (stereoisomers); *In re Wilder*, 563 F.2d 457, 460, 195 USPQ 426, 429 (CCPA 1977) (adjacent homologs and structural isomers); *In re Hoch*, 428 F.2d 1341, 1344, 166 USPQ 406, 409 (CCPA 1970) (acid and ethyl ester); *In re Druey*, 319 F.2d 237, 240, 138 USPQ 39, 41 (CCPA 1963) (omission of methyl group from pyrazole ring). Generally, some teaching of a structural similarity will be necessary to suggest selection of the claimed species or subgenus. *Id.*

(d) Consider the Teachings of Similar Properties or Uses

Consider the properties and utilities of the structurally similar prior art species or subgenus. It is the properties and utilities that provide real world motivation for a person of ordinary skill to make species

structurally similar to those in the prior art. *Dillon*, 919 F.2d at 697, 16 USPQ2d at 1905; *In re Stemniski*, 444 F.2d 581, 586, 170 USPQ 343, 348 (CCPA 1971). Conversely, lack of any known useful properties weighs against a finding of motivation to make or select a species or subgenus. *In re Albrecht*, 514 F.2d 1389, 1392, 1395-96, 185 USPQ 585, 587, 590 (CCPA 1975) (The prior art compound so irritated the skin that it could not be regarded as useful for the disclosed anesthetic purpose, and therefore a person skilled in the art would not have been motivated to make related compounds.); *Stemniski*, 444 F.2d at 586, 170 USPQ at 348 (close structural similarity alone is not sufficient to create a *prima facie* case of obviousness when the reference compounds lack utility, and thus there is no motivation to make related compounds.). However, the prior art need not disclose a newly discovered property in order for there to be a *prima facie* case of obviousness. *Dillon*, 919 F.2d at 697, 16 USPQ2d at 1904-05 (and cases cited therein). If the claimed invention and the structurally similar prior art species share any useful property, that will generally be sufficient to motivate an artisan of ordinary skill to make the claimed species, *e.g., id.* For example, based on a finding that a tri-orthoester and a tetra-orthoester behave similarly in certain chemical reactions, it has been held that one of ordinary skill in the relevant art would have been motivated to select either structure. 919 F.2d at 692, 16 USPQ2d at 1900-01. In fact, similar properties may normally be presumed when compounds are very close in structure. *Dillon*, 919 F.2d at 693, 696, 16 USPQ2d at 1901, 1904. See also *In re Grabiak*, 769 F.2d 729, 731, 226 USPQ 870, 871 (Fed. Cir. 1985) ("When chemical compounds have 'very close' structural similarities and similar utilities, without more a *prima facie* case may be made."). Thus, evidence of similar properties or evidence of any useful properties disclosed in the prior art that would be expected to be shared by the claimed invention weighs in favor of a conclusion that the claimed invention would have been obvious. *Dillon*, 919 F.2d at 697-98, 16 USPQ2d at 1905; *In re Wilder*, 563 F.2d 457, 461, 195 USPQ 426, 430 (CCPA 1977); *In re Linter*, 458 F.2d 1013, 1016, 173 USPQ 560, 562 (CCPA 1972).

(e) Consider the Predictability of the Technology

Consider the predictability of the technology. See, e.g., *Dillon*, 919 F.2d at 692-97, 16 USPQ2d at 1901-05; *In re Grabiak*, 769 F.2d 729, 732-33, 226 USPQ 870, 872 (Fed. Cir. 1985). If the technology is unpredictable, it is less likely that structurally similar species will render a claimed species obvious because it may not be reasonable to infer that they would share similar properties. See, e.g., *In re May*, 574 F.2d 1082, 1094, 197 USPQ 601, 611 (CCPA 1978) (*prima facie* obviousness of claimed analgesic compound based on structurally similar prior art isomer was rebutted with evidence demonstrating that analgesia and addiction properties could not be reliably predicted on the basis of chemical structure); *In re Schechter*, 205 F.2d 185, 191, 98 USPQ 144, 150 (CCPA 1953) (unpredictability in the insecticide field, with homologs, isomers and analogs of known effective insecticides having proven ineffective as insecticides, was considered as a factor weighing against a conclusion of obviousness of the claimed compounds). However, obviousness does not require absolute predictability, only a reasonable expectation of success, i.e., a reasonable expectation of obtaining similar properties. See, e.g., *In re O'Farrell*, 853 F.2d 894, 903, 7 USPQ2d 1673, 1681 (Fed. Cir. 1988).

(f) Consider Any Other Teaching To Support the Selection of the Species or Subgenus

The categories of relevant teachings enumerated above are those most frequently encountered in a genus-species case, but they are not exclusive. Office personnel should consider the totality of the evidence in each case. In unusual cases, there may be other relevant teachings sufficient to support the selection of the species or subgenus and, therefore, a conclusion of obviousness.

5. Make Express Fact-Findings and Determine Whether They Support a *Prima Facie* Case of Obviousness

Based on the evidence as a whole (*In re Bell*, 991 F.2d 781,784, 26 USPQ2d 1529, 1531 (Fed. Cir. 1993); *In re Kulling*, 897 F.2d 1147, 1149, 14 USPQ2d 1056, 1057 (Fed. Cir. 1990)), Office personnel should make express fact-findings relating to

the *Graham* factors, focusing primarily on the prior art teachings discussed above. The fact-findings should specifically articulate what teachings or suggestions in the prior art would have motivated one of ordinary skill in the art to select the claimed species or subgenus. *Kulling*, 897 F.2d at 1149, 14 USPQ2d at 1058; *Panduit Corp. v. Dennison Mfg. Co.*, 810 F.2d 1561, 1579 n.42, 1 USQP2d 1593, 1606 n.42 (Fed. Cir. 1987). Thereafter, it should be determined whether these findings, considered as a whole, support a *prima facie* case that the claimed invention would have been obvious to one of ordinary skill in the relevant art at the time the invention was made.

B. Determining Whether Rebuttal Evidence Is Sufficient To Overcome the Prima Facie Case of Obviousness

If a *prima facie* case of obviousness is established, the burden shifts to the applicant to come forward with arguments and/or evidence to rebut the *prima facie* case. See, e.g., *Dillon*, 919 F.2d at 692, 16 USPQ2d at 1901. Rebuttal evidence and arguments can be presented in the specification, *In re Soni*, 54 F.3d 746, 750, 34 USPQ2d 1684, 1687 (Fed. Cir. 1995), by counsel, *In re Chu*, 66 F.3d 292, 299, 36 USPQ2d 1089, 1094-95 (Fed. Cir. 1995), or by way of an affidavit or declaration under 37 CFR 1.132, e.g., *Soni*, 54 F.3d at 750, 34 USPQ2d at 1687; *In re Piasecki*, 745 F.2d 1468, 1474, 223 USPQ 785, 789-90 (Fed. Cir. 1984). However, arguments of counsel cannot take the place of factually supported objective evidence. See, e.g., *In re Huang*, 100 F.3d 135, 139-40, 40 USPQ2d 1685, 1689 (Fed. Cir. 1996); *In re De Blauwe*, 736 F.2d 699, 705, 222 USPQ 191, 196 (Fed. Cir. 1984).

Office personnel should consider all rebuttal arguments and evidence presented by applicants. See, e.g., *In re Soni*, 54 F.3d 746, 750, 34 USPQ2d 1684, 1687 (Fed. Cir. 1995) (error not to consider evidence presented in the specification). *C.f., In re Alton*, 76 F.3d 1168, 37 USPQ2d 1578 (Fed. Cir. 1996) (error not to consider factual evidence submitted to counter a 35 U.S.C. 112 rejection); *In re Beattie*, 974 F.2d 1309, 1313, 24 USPQ2d 1040, 1042-43 (Fed. Cir. 1992) (Office personnel should consider declarations from those skilled in the art praising the claimed invention and opining that the art teaches away from the invention.); *Piasecki*, 745 F.2d at 1472, 223 USPQ at 788 ("[Rebuttal evidence] may relate to any of the *Graham* factors including the so-called secondary considerations."). Rebuttal evidence may include evidence of "secondary considerations," such as "commercial success, long felt but unsolved needs, [and] failure of others." *Graham v. John Deere Co.*, 383 U.S. at 17, 148 USPQ at 467. See also, e.g., *In re Piasecki*, 745 F.2d 1468, 1473, 223 USPQ 785, 788 (Fed. Cir. 1984) (commercial success). Rebuttal evidence may also include evidence that the claimed invention yields unexpectedly improved properties or properties not present in the prior art. Rebuttal evidence may consist of a showing that the claimed compound possesses unexpected properties. *Dillon*, 919 F.2d at 692-93, 16 USPQ2d at 1901. A showing of unexpected results must be based on evidence, not argument or speculation. *In re Mayne*, 104 F.3d 1339, 1343-44, 41 USPQ2d 1451, 1455-56 (Fed. Cir. 1997) (conclusory statements that claimed compound possesses unusually low immune response or unexpected biological activity that is unsupported by comparative data held insufficient to overcome *prima facie* case of obviousness). Rebuttal evidence may include evidence that the claimed invention was copied by others. See, e.g., *In re GPAC*, 57 F.3d 1573, 1580, 35 USPQ2d 1116, 1121 (Fed. Cir. 1995); *Hybritech Inc. v. Monoclonal Antibodies*, 802 F.2d 1367, 1380, 231 USPQ 81, 90 (Fed. Cir. 1986). It may also include evidence of the state of the art, the level of skill in the art, and the beliefs of those skilled in the art. See, e.g., *In re Oelrich*, 579 F.2d 86, 91-92, 198 USPQ 210, 214 (CCPA 1978) (Expert opinions regarding the level of skill in the art were probative of the Nonobviousness of the claimed invention.); *Piasecki*, 745 F.2d at 1471, 1473-74, 223 USPQ at 790 (Evidence of nontechnological nature is pertinent to the conclusion of obviousness. The declarations of those skilled in the art regarding the need for the invention and its reception by the art were improperly discounted by the Board.); *Beattie*, 974 F.2d at 1313, 24 USPQ2d at 1042-43 (Seven declarations provided by music teachers opining that the art teaches away from the claimed invention must be considered, but were not probative because they did not contain facts and did not deal with the specific prior art that was the subject of the rejection.). For example, rebuttal evidence may include a showing that the prior art fails to disclose or render obvious a method for making the compound,

which would preclude a conclusion of obviousness of the compound. A conclusion of obviousness requires that the reference(s) relied upon be enabling in that it put the public in possession of the claimed invention. The court in *In re Hoeksema*, 399 F.2d 269, 274, 158 USPQ 596, 601 (CCPA 1968), stated:

> Thus, upon careful reconsideration it is our view that if the prior art of record fails to disclose or render obvious a method for making a claimed compound, at the time the invention was made, it may not be legally concluded that the compound itself is in the possession of the public. [footnote omitted.] In this context, we say that the absence of a known or obvious process for making the claimed compounds overcomes a presumption that the compounds are obvious, based on close relationships between their structures and those of prior art compounds.

The *Hoeksema* court further noted that once a prima facie case of obviousness is made by the PTO through citation of references, the burden is on the applicant to produce contrary evidence establishing that the reference being relied on would not enable a skilled artisan to produce the different compounds claimed. *Id.* at 274-75, 158 USPQ at 601. See also *Ashland Oil, Inc. v. Delta Resins & Refractories, Inc.*, 776 F.2d 281, 295, 297, 227 USPQ 657, 666, 667 (Fed. Cir. 1985) (citing *Hoeksema* for the proposition above); *In re Grose*, 592 F.2d 1161, 1168, 201 USPQ 57, 63-64 (CCPA 1979) ("One of the assumptions underlying a prima facie obviousness rejection based upon a structural relationship between compounds, such as adjacent homologs, is that a method disclosed for producing one would provide those skilled in the art with a method for producing the other... Failure of the prior art to disclose or render obvious a method for making any composition of matter, whether a compound or a mixture of compounds like a zeolite, precludes a conclusion that the composition would have been obvious.").

Consideration of rebuttal evidence and arguments requires Office personnel to weigh the proffered evidence and arguments. Office personnel should avoid giving evidence no weight, except in rare circumstances. *Id.* See also *In re Alton*, 76 F.3d 1168, 1174-75, 37 USPQ2d 1578, 1582-83 (Fed. Cir. 1996). However, to be entitled to substantial weight, the applicant should establish a nexus between the rebuttal evidence and the claimed invention, i.e., objective evidence of nonobviousness must be attributable to the claimed invention. The Federal Circuit has acknowledged that applicant bears the burden of establishing nexus, stating:

> In the ex parte process of examining a patent application, however, the PTO lacks the means or resources to gather evidence which supports or refutes the applicant's assertion that the sales constitute commercial success. C.f. Ex parte Remark, 15 USPQ2d 1498, 1503 ([BPAI] 1990) (evidentiary routine of shifting burdens in civil proceedings inappropriate in ex parte prosecution proceedings because examiner has no available means for adducing evidence). Consequently, the PTO must rely upon the applicant to provide hard evidence of commercial success.

In re Huang, 100 F.3d 135, 139-40, 40 USPQ2d 1685, 1689 (Fed. Cir. 1996). See also *GPAC*, 57 F.3d at 1580, 35 USPQ2d at 1121; *In re Paulsen*, 30 F.3d 1475, 1482, 31 USPQ2d 1671, 1676 (Fed. Cir. 1994) (Evidence of commercial success of articles not covered by the claims subject to the 35 U.S.C. 103 rejection was not probative of nonobviousness.). Additionally, the evidence must be reasonably commensurate in scope with the claimed invention. See, e.g., *In re Kulling*, 897 F.2d 1147, 1149, 14 USPQ2d 1056, 1058 (Fed. Cir. 1990); *In re Grasselli*, 713 F.2d 731, 743, 218 USPQ 769, 777 (Fed. Cir. 1983). *In re Soni*, 54 F.3d 746, 34 USPQ2d 1684 (Fed. Cir. 1995) does not change this analysis. In *Soni*, the Court declined to consider the Office's argument that the evidence of nonobviousness was not commensurate in scope with the claim because it had not been raised by the examiner (54 F.3d at 751, 34 USPQ2d at 1688).

When considering whether proffered evidence is commensurate in scope with the claimed invention, Office personnel should not require the applicant to show unexpected results over the entire range of properties possessed by a chemical compound or composition. See, e.g., *In re Chupp*, 816 F.2d 643, 646, 2 USPQ2d 1437, 1439 (Fed. Cir. 1987). Evidence that the compound or composition possesses superior and unexpected properties in one of a spectrum of common properties can be sufficient to rebut a *prima facie* case of obviousness. *Id.*

For example, a showing of unexpected results for a single member of a claimed subgenus, or a narrow portion of a claimed range would be sufficient to rebut a *prima facie* case of obviousness if a skilled artisan "could ascertain a trend in the exemplified data that would allow him to reasonably extend the probative value thereof." *In re Clemens*, 622 F.2d 1029, 1036, 206 USPQ 289, 296 (CCPA 1980) (Evidence of the

unobviousness of a broad range can be proven by a narrower range when one skilled in the art could ascertain a trend that would allow him to reasonably extend the probative value thereof.). But see, *Grasselli*, 713 F.2d at 743, 218 USPQ at 778 (evidence of superior properties for sodium containing composition insufficient to establish the non-obviousness of broad claims for a catalyst with "an alkali metal" where it was well known in the catalyst art that different alkali metals were not interchangeable and applicant had shown unexpected results only for sodium containing materials); *In re Greenfield*, 571 F.2d 1185, 1189, 197 USPQ 227, 230 (CCPA 1978) (evidence of superior properties in one species insufficient to establish the nonobviousness of a subgenus containing hundreds of compounds); *In re Lindner*, 457 F.2d 506, 508, 173 USPQ 356, 358 (CCPA 1972) (one test not sufficient where there was no adequate basis for concluding the other claimed compounds would behave the same way). However, an exemplary showing may be sufficient to establish a reasonable correlation between the showing and the entire scope of the claim, when viewed by a skilled artisan. See, e.g., *Chupp*, 816 F.2d at 646, 2 USPQ2d at 1439; *Clemens*, 622 F.2d at 1036, 206 USPQ at 296. On the other hand, evidence of an unexpected property may not be sufficient regardless of the scope of the showing. Usually, a showing of unexpected results is sufficient to overcome a *prima facie* case of obviousness. See, e.g., *In re Albrecht*, 514 F.2d 1389, 1396, 185 USPQ 585, 590 (CCPA 1975). However, where the claims are not limited to a particular use, and where the prior art provides other motivation to select a particular species or subgenus, a showing of a new use may not be sufficient to confer patentability. See *Dillon*, 919 F.2d at 692, 16 USPQ2d at 1900-01. Accordingly, each case should be evaluated individually based on the totality of the circumstances.

Office personnel should not evaluate rebuttal evidence for its "knockdown" value against the *prima facie* case, *Piasecki*, 745 F.2d at 1473, 223 USPQ at 788, or summarily dismiss it as not compelling or insufficient. If the evidence is deemed insufficient to rebut the *prima facie* case of obviousness, Office personnel should specifically set forth the facts and reasoning that justify this conclusion.

III. RECONSIDER ALL EVIDENCE AND CLEARLY COMMUNICATE FINDINGS AND CONCLUSIONS

A determination under 35 U.S.C. 103 should rest on all the evidence and should not be influenced by any earlier conclusion. See, e.g., *Piasecki*, 745 F.2d at 1472-73, 223 USPQ at 788; *In re Eli Lilly & Co.*, 902 F.2d 943, 945, 14 USPQ2d 1741, 1743 (Fed. Cir. 1990). Thus, once the applicant has presented rebuttal evidence, Office personnel should reconsider any initial obviousness determination in view of the entire record. See, e.g., *Piasecki*, 745 F.2d at 1472, 223 USPQ at 788; *Eli Lilly*, 902 F.2d at 945, 14 USPQ2d at 1743. All the proposed rejections and their bases should be reviewed to confirm their correctness. Only then should any rejection be imposed in an Office action. The Office action should clearly communicate the Office's findings and conclusions, articulating how the conclusions are supported by the findings.

Where applicable, the findings should clearly articulate which portions of the reference support any rejection. Explicit findings on motivation or suggestion to select the claimed invention should also be articulated in order to support a 35 U.S.C. 103 ground of rejection. *Dillon*, 919 F.2d at 693, 16 USPQ2d at 1901; *In re Mills*, 916 F.2d 680, 683, 16 USPQ2d 1430, 1433 (Fed. Cir. 1990). Conclusory statements of similarity or motivation, without any articulated rationale or evidentiary support, do not constitute sufficient factual findings.

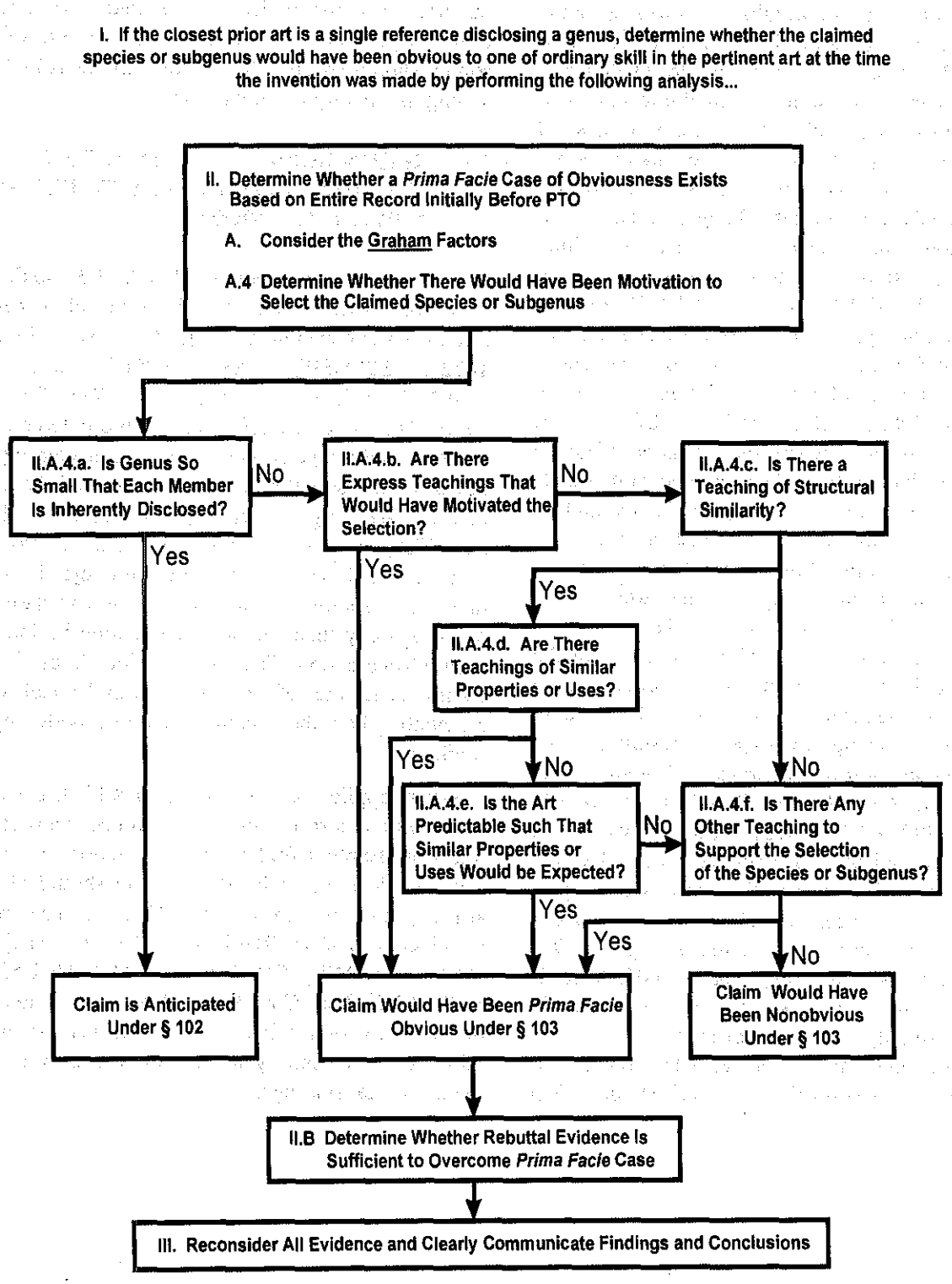
I. If the closest prior art is a single reference disclosing a genus, determine whether the claimed species or subgenus would have been obvious to one of ordinary skill in the pertinent art at the time the invention was made by performing the following analysis...
II. Determine Whether a *Prima Facie* Case of Obviousness Exists Based on Entire Record Initially Before PTO
A. Consider the Graham Factors
A.4 Determine Whether There Would Have Been Motivation to Select the Claimed Species or Subgenus
II.A.4.a. Is Genus So Small That Each Member Is Inherently Disclosed?
No
II.A.4.b. Are There Express Teachings That Would Have Motivated the Selection?
No
II.A.4.c. Is There a Teaching of Structural Similarity?
Yes
Yes
Yes
II.A.4.d. Are There Teachings of Similar Properties or Uses?
Yes
No
No
II.A.4.e. Is the Art Predictable Such That Similar Properties or Uses Would be Expected?
No
II.A.4.f. Is There Any Other Teaching to Support the Selection of the Species or Subgenus?
Yes
Yes
No
Claim is Anticipated Under § 102
Claim Would Have Been *Prima Facie* Obvious Under § 103
Claim Would Have Been Nonobvious Under § 103
II.B Determine Whether Rebuttal Evidence Is Sufficient to Overcome *Prima Facie* Case
III. Reconsider All Evidence and Clearly Communicate Findings and Conclusions

2144.09 Close Structural Similarity Between Chemical Compounds (Homologs, Analogues, Isomers)

REJECTION BASED ON CLOSE STRUCTURAL SIMILARITY IS FOUNDED ON THE EXPECTATION THAT COMPOUNDS SIMILAR IN STRUCTURE WILL HAVE SIMILAR PROPERTIES

A *prima facie* case of obviousness may be made when chemical compounds have very close structural similarities and similar utilities. "An obviousness rejection based on similarity in chemical structure and function entails the motivation of one skilled in the art to make a claimed compound, in the expectation that compounds similar in structure will have similar properties." *In re Payne*, 606 F.2d 303, 313, 203 USPQ 245, 254 (CCPA 1979). See *In re Papesch*, 315 F.2d 381, 137 USPQ 43 (CCPA 1963) (discussed in more detail below) and *In re Dillon*, 919 F.2d 688, 16 USPQ2d 1897 (Fed. Cir. 1991) (discussed below and in MPEP § 2144) for an extensive review of the case law pertaining to obviousness based on close structural similarity of chemical compounds. See also MPEP § 2144.08, paragraph II.A.4.(c).

HOMOLOGY AND ISOMERISM ARE FACTS WHICH MUST BE CONSIDERED WITH ALL OTHER RELEVANT FACTS IN DETERMINING OBVIOUSNESS

Compounds which are position isomers (compounds having the same radicals in physically different positions on the same nucleus) or homologs (compounds differing regularly by the successive addition of the same chemical group, e.g., by $-CH_2-$ groups) are generally of sufficiently close structural similarity that there is a presumed expectation that such compounds possess similar properties. *In re Wilder*, 563 F.2d 457, 195 USPQ 426 (CCPA 1977). See also *In re May*, 574 F.2d 1082, 197 USPQ 601 (CCPA 1978) (stereoisomers *prima facie* obvious).

Isomers having the same empirical formula but different structures are not necessarily considered equivalent by chemists skilled in the art and therefore are not necessarily suggestive of each other. *Ex parte Mowry*, 91 USPQ 219 (Bd. App. 1950) (claimed cyclohexylstyrene not *prima facie* obvious over prior art isohexylstyrene). Similarly, homologs which are far removed from adjacent homologs may not be expected to have similar properties. *In re Mills*, 281 F.2d 218, 126 USPQ 513 (CCPA 1960) (prior art disclosure of C_8 to C_{12} alkyl sulfates was not sufficient to render *prima facie* obvious claimed C_1 alkyl sulfate).

Homology and isomerism involve close structural similarity which must be considered with all other relevant facts in determining the issue of obviousness. *In re Mills*, 281 F.2d 218, 126 USPQ 513 (CCPA 1960); *In re Wiechert*, 370 F.2d 927, 152 USPQ 247 (CCPA 1967). Homology should not be automatically equated with *prima facie* obviousness because the claimed invention and the prior art must each be viewed "as a whole." *In re Langer*, 465 F.2d 896, 175 USPQ 169 (CCPA 1972) (Claims to a polymerization process using a sterically hindered amine were held unobvious over a similar prior art process because the prior art disclosed a large number of unhindered amines and only one sterically hindered amine (which differed from a claimed amine by 3 carbon atoms), and therefore the reference as a whole did not apprise the ordinary artisan of the significance of hindered amines as a class.).

PRESENCE OF A TRUE HOMOLOGOUS OR ISOMERIC RELATIONSHIP IS NOT CONTROLLING

Prior art structures do not have to be true homologs or isomers to render structurally similar compounds *prima facie* obvious. *In re Payne*, 606 F.2d 303, 203 USPQ 245 (CCPA 1979) (Claimed and prior art compounds were both directed to heterocyclic carbamoyloximino compounds having pesticidal activity. The only structural difference between the claimed and prior art compounds was that the ring structures of the claimed compounds had two carbon atoms between two sulfur atoms whereas the prior art ring structures had either one or three carbon atoms between two sulfur atoms. The court held that although the prior art compounds were not true homologs or isomers of the claimed compounds, the similarity between the chemical structures and properties is sufficiently close that one of ordinary skill in the art would have been motivated to make the claimed compounds in searching for new pesticides.).

See also *In re Mayne,* 104 F.3d 1339, 41 USPQ2d 1451 (Fed. Cir. 1997) (claimed protein was held to be obvious in light of structural similarities to the prior art, including known structural similarity of Ile and Lev); *In re Merck & Co., Inc.*, 800 F.2d 1091, 231 USPQ 375 (Fed. Cir. 1986) (claimed and prior art compounds used in a method of treating depression would have been expected to have similar activity because the structural difference between the compounds involved a known bioisosteric replacement) (see MPEP § 2144.08, paragraph II.A.4(c) for a more detailed discussion of the facts in the *Mayne* and *Merck* cases); *In re Dillon*, 919 F.2d 688, 16 USPQ2d 1897 (Fed. Cir. 1991) (The tri-orthoester fuel compositions of the prior art and the claimed tetra-orthoester fuel compositions would have been expected to have similar properties based on close structural and chemical similarity between the orthoesters and the fact that both the prior art and applicant used the orthoesters as fuel additives.) (See MPEP § 2144 for a more detailed discussion of the facts in the *Dillon* case.).

Compare *In re Grabiak*, 769 F.2d 729, 226 USPQ 871 (Fed. Cir. 1985) (substitution of a thioester group for an ester group in an herbicidal safener compound was not suggested by the prior art); *In re Bell*, 991 F.2d 781, 26 USPQ2d 1529 (Fed. Cir. 1993) (The established relationship between a nucleic acid and the protein it encodes in the genetic code does not render a gene *prima facie* obvious over its corresponding protein in the same way that closely related structures in chemistry may create a *prima facie* case because there are a vast number of nucleotide sequences that might encode for a specific protein as a result of degeneracy in the genetic code (i.e., the fact that most amino acids are specified by more than one nucleotide sequence or codon).); *In re Deuel*, 51 F.3d 1552, 1558-59, 34 USPQ2d 1210, 1215 (Fed. Cir. 1995) ("A prior art disclosure of the amino acid sequence of a protein does not necessarily render particular DNA molecules encoding the protein obvious because the redundancy of the genetic code permits one to hypothesize an enormous number of DNA sequences coding for the protein." The existence of a general method of gene cloning in the prior art is not sufficient, without more, to render obvious a particular cDNA molecule.).

PRESENCE OR ABSENCE OF PRIOR ART SUGGESTION OF METHOD OF MAKING A CLAIMED COMPOUND MAY BE RELEVANT IN DETERMINING *PRIMA FACIE* OBVIOUSNESS

"[T]he presence—or absence—of a suitably operative, obvious process for making a composition of matter may have an ultimate bearing on whether that composition is obvious—or nonobvious—under 35 U.S.C. 103." *In re Maloney,* 411 F.2d 1321, 1323, 162 USPQ 98, 100 (CCPA 1969).

"[I]f the prior art of record fails to disclose or render obvious a method for making a claimed compound, at the time the invention was made, it may not be legally concluded that the compound itself is in the possession of the public. In this context, we say that the absence of a known or obvious process for making the claimed compounds overcomes a presumption that the compounds are obvious, based on the close relationships between their structures and those of prior art compounds." *In re Hoeksema*, 399 F.2d 269, 274-75, 158 USPQ 597, 601 (CCPA 1968).

See *In re Payne*, 606 F.2d 303, 203 USPQ 245 (CCPA 1979) for a general discussion of circumstances under which the prior art suggests methods for making novel compounds which are of close structural similarity to compounds known in the prior art. In the biotechnology arts, the existence of a general method of gene cloning in the prior art is not sufficient, without more, to render obvious a particular cDNA molecule. *In re Deuel*, 51 F.3d 1552, 1558, 34 USPQ2d 1210, 1215 (Fed. Cir. 1995) ("[T]he existence of a general method of isolating cDNA or DNA molecules is essentially irrelevant to the question whether the specific molecules themselves would have been obvious, in the absence of other prior art that suggests the claimed DNAs."); *In re Bell*, 991 F.2d 781, 785, 26 USPQ2d 1529, 1532 (Fed. Cir. 1993). However, it may be proper to apply "methodology in rejecting product claims under 35 U.S.C. 103, depending on the particular facts of the case, the manner and context in which methodology applies, and the overall logic of the rejection." *Ex parte Goldgaber*, 41 USPQ2d 1172, 1176 (Bd. Pat. App. & Inter. 1996).

PRESUMPTION OF OBVIOUSNESS BASED ON STRUCTURAL SIMILARITY IS OVERCOME WHERE THERE IS NO REASONABLE EXPECTATION OF SIMILAR PROPERTIES

The presumption of obviousness based on a reference disclosing structurally similar compounds may be overcome where there is evidence showing there is no reasonable expectation of similar properties in structurally similar compounds. *In re May*, 574 F.2d 1082, 197 USPQ 601 (CCPA 1978) (appellant produced sufficient evidence to establish a substantial degree of unpredictability in the pertinent art area, and thereby rebutted the presumption that structurally similar compounds have similar properties); *In re Schechter*, 205 F.2d 185, 98 USPQ 144 (CCPA 1953). See also *Ex parte Blattner*, 2 USPQ2d 2047 (Bd. Pat. App. & Inter. 1987) (Claims directed to compounds containing a 7-membered ring were rejected as *prima facie* obvious over a reference which taught 5- and 6-membered ring homologs of the claimed compounds. The Board reversed the rejection because the prior art taught that the compounds containing a 5-membered ring possessed the opposite utility of the compounds containing the 6-membered ring, undermining the examiner's asserted *prima facie* case arising from an expectation of similar results in the claimed compounds which contain a 7-membered ring.).

IF PRIOR ART COMPOUNDS HAVE NO UTILITY, OR UTILITY ONLY AS INTERMEDIATES, CLAIMED STRUCTURALLY SIMILAR COMPOUNDS MAY NOT BE *PRIMA FACIE* OBVIOUS OVER THE PRIOR ART

If the prior art does not teach <u>any</u> specific or significant utility for the disclosed compounds, then the prior art is not sufficient to render structurally similar claims *prima facie* obvious because there is no motivation for one of ordinary skill in the art to make the reference compounds, much less any structurally related compounds. *In re Stemniski*, 444 F.2d 581, 170 USPQ 343 (CCPA 1971).

Where structurally similar "prior art compounds 'cannot be regarded as useful' for the sole use disclosed [by the reference],... a person having ordinary skill in the art would lack the 'necessary impetus' to make the claimed compounds." *In re Albrecht*, 514 F.2d 1389, 1396, 185 USPQ 585, 590 (CCPA 1975) (prior art reference studied the local anesthetic activity of various compounds, and taught that compounds structurally similar to those claimed were irritating to human skin and therefore "cannot be regarded as useful anesthetics." 514 F.2d at 1393, 185 USPQ at 587).

Similarly, if the prior art merely discloses compounds as intermediates in the production of a final product, one of ordinary skill in the art would not have been motivated to stop the reference synthesis and investigate the intermediate compounds with an expectation of arriving at claimed compounds which have different uses. *In re Lalu*, 747 F.2d 703, 223 USPQ 1257 (Fed. Cir. 1984).

PRIMA FACIE CASE REBUTTABLE BY EVIDENCE OF SUPERIOR OR UNEXPECTED RESULTS

A *prima facie* case of obviousness based on structural similarity is rebuttable by proof that the claimed compounds possess unexpectedly advantageous or superior properties. *In re Papesch*, 315 F.2d 381, 137 USPQ 43 (CCPA 1963) (Affidavit evidence which showed that claimed triethylated compounds possessed anti-inflammatory activity whereas prior art trimethylated compounds did not was sufficient to overcome obviousness rejection based on the homologous relationship between the prior art and claimed compounds.); *In re Wiechert*, 370 F.2d 927, 152 USPQ 247 (CCPA 1967) (a 7-fold improvement of activity over the prior art held sufficient to rebut *prima facie* obviousness based on close structural similarity).

However, a claimed compound may be obvious because it was suggested by, or structurally similar to, a prior art compound even though a particular benefit of the claimed compound asserted by patentee is not expressly disclosed in the prior art. It is the differences in fact in their respective properties which are determinative of nonobviousness. If the prior art compound does in fact possess a particular benefit, even though the benefit is not recognized in the prior art, applicant's recognition of the benefit is not in itself sufficient to distinguish the claimed compound from the prior art. *In re Dillon*, 919 F.2d 688, 16 USPQ2d 1897 (Fed. Cir. 1991).

See MPEP § 716.02 - § 716.02(g) for a discussion of evidence alleging unexpectedly advantageous or superior results.

2145 Consideration of Applicant's Rebuttal Arguments

I. ARGUMENT DOES NOT REPLACE EVIDENCE WHERE EVIDENCE IS NECESSARY

Attorney argument is not evidence unless it is an admission, in which case, an examiner may use the admission in making a rejection. See MPEP § 2129 and § 2144.03 for a discussion of admissions as prior art.

The arguments of counsel cannot take the place of evidence in the record. *In re Schulze*, 346 F.2d 600, 602, 145 USPQ 716, 718 (CCPA 1965); *In re Geisler*, 116 F.3d 1465, 43 USPQ2d 1362 (Fed. Cir. 1997) ("An assertion of what seems to follow from common experience is just attorney argument and not the kind of factual evidence that is required to rebut a *prima facie* case of obviousness."). See MPEP § 716.01(c) for examples of attorney statements which are not evidence and which must be supported by an appropriate affidavit or declaration.

II. ARGUING ADDITIONAL ADVANTAGES OR LATENT PROPERTIES

Prima Facie Obviousness Is Not Rebutted by Merely Recognizing Additional Advantages or Latent Properties Present in the Prior Art

Mere recognition of latent properties in the prior art does not render nonobvious an otherwise known invention. *In re Wiseman*, 596 F.2d 1019, 201 USPQ 658 (CCPA 1979) (Claims were directed to grooved carbon disc brakes wherein the grooves were provided to vent steam or vapor during a braking action. A prior art reference taught noncarbon disc brakes which were grooved for the purpose of cooling the faces of the braking members and eliminating dust. The court held the prior art references when combined would overcome the problems of dust and overheating solved by the prior art and would inherently overcome the steam or vapor cause of the problem relied upon for patentability by applicants. Granting a patent on the discovery of an unknown but inherent function (here venting steam or vapor) "would remove from the public that which is in the public domain by virtue of its inclusion in, or obviousness from, the prior art." 596 F.2d at 1022, 201 USPQ at 661.); *In re Baxter Travenol Labs.*, 952 F.2d 388, 21 USPQ2d 1281 (Fed. Cir. 1991) (Appellant argued that the presence of DEHP as the plasticizer in a blood collection bag unexpectedly suppressed hemolysis and therefore rebutted any *prima facie* showing of obviousness, however the closest prior art utilizing a DEHP plasticized blood collection bag inherently achieved same result, although this fact was unknown in the prior art.).

"The fact that appellant has recognized another advantage which would flow naturally from following the suggestion of the prior art cannot be the basis for patentability when the differences would otherwise be obvious." *Ex parte Obiaya*, 227 USPQ 58, 60 (Bd. Pat. App. & Inter. 1985) (The prior art taught combustion fluid analyzers which used labyrinth heaters to maintain the samples at a uniform temperature. Although appellant showed an unexpectedly shorter response time was obtained when a labyrinth heater was employed, the Board held this advantage would flow naturally from following the suggestion of the prior art.). See also *Lantech Inc. v. Kaufman Co. of Ohio Inc.*, 878 F.2d 1446, 12 USPQ2d 1076, 1077 (Fed. Cir. 1989), *cert. denied*, 493 U.S. 1058 (1990) (unpublished — not citable as precedent) ("The recitation of an additional advantage associated with doing what the prior art suggests does not lend patentability to an otherwise unpatentable invention.").

In re Lintner, 458 F.2d 1013, 173 USPQ 560 (CCPA 1972) and *In re Dillon*, 919 F.2d 688, 16 USPQ2d 1897 (Fed. Cir. 1990) discussed in MPEP § 2144 are also pertinent to this issue.

See MPEP § 716.02 - § 716.02(g) for a discussion of declaratory evidence alleging unexpected results.

III. ARGUING THAT PRIOR ART DEVICES ARE NOT PHYSICALLY COMBINABLE

"The test for obviousness is not whether the features of a secondary reference may be bodily incorporated into the structure of the primary reference.... Rather, the test is what the combined teachings of those references would have suggested to those of ordinary skill in the art." *In re Keller*, 642 F.2d 413, 425, 208 USPQ 871, 881 (CCPA 1981). See also *In re Sneed*, 710 F.2d 1544, 1550, 218 USPQ 385, 389 (Fed. Cir. 1983) ("[I]t is not necessary that the inventions of the references be physically combinable to render obvious the invention under review."); and *In*

re Nievelt, 482 F.2d 965, 179 USPQ 224, 226 (CCPA 1973) ("Combining the teachings of references does not involve an ability to combine their specific structures.").

However, the claimed combination cannot change the principle of operation of the primary reference or render the reference inoperable for its intended purpose. See MPEP § 2143.01.

IV. ARGUING AGAINST REFERENCES INDIVIDUALLY

One cannot show nonobviousness by attacking references individually where the rejections are based on combinations of references. *In re Keller*, 642 F.2d 413, 208 USPQ 871 (CCPA 1981); *In re Merck & Co., Inc.*, 800 F.2d 1091, 231 USPQ 375 (Fed. Cir. 1986).

V. ARGUING ABOUT THE NUMBER OF REFERENCES COMBINED

Reliance on a large number of references in a rejection does not, without more, weigh against the obviousness of the claimed invention. *In re Gorman*, 933 F.2d 982, 18 USPQ2d 1885 (Fed. Cir. 1991) (Court affirmed a rejection of a detailed claim to a candy sucker shaped like a thumb on a stick based on thirteen prior art references.).

VI. ARGUING LIMITATIONS WHICH ARE NOT CLAIMED

Although the claims are interpreted in light of the specification, limitations from the specification are not read into the claims. *In re Van Geuns*, 988 F.2d 1181, 26 USPQ2d 1057 (Fed. Cir. 1993) (Claims to a superconducting magnet which generates a "uniform magnetic field" were not limited to the degree of magnetic field uniformity required for Nuclear Magnetic Resonance (NMR) imaging. Although the specification disclosed that the claimed magnet may be used in an NMR apparatus, the claims were not so limited.); *Constant v. Advanced Micro-Devices, Inc.*, 848 F.2d 1560, 1571-72, 7 USPQ2d 1057, 1064-1065 (Fed. Cir.), *cert. denied*, 488 U.S. 892 (1988) (Various limitations on which appellant relied were not stated in the claims; the specification did not provide evidence indicating these limitations must be read into the claims to give meaning to the disputed terms.); *Ex parte McCullough*, 7 USPQ2d 1889, 1891 (Bd. Pat. App. & Inter. 1987) (Claimed electrode was rejected as obvious despite assertions that electrode functions differently than would be expected when used in nonaqueous battery since "although the demonstrated results may be germane to the patentability of a battery containing appellant's electrode, they are not germane to the patentability of the invention claimed on appeal.").

See MPEP § 2111 - § 2116.01, for additional case law relevant to claim interpretation.

VII. ARGUING ECONOMIC INFEASIBILITY

The fact that a combination would not be made by businessmen for economic reasons does not mean that a person of ordinary skill in the art would not make the combination because of some technological incompatibility. *In re Farrenkopf*, 713 F.2d 714, 219 USPQ 1 (Fed. Cir. 1983) (Prior art reference taught that addition of inhibitors to radioimmunoassay is the most convenient, but costliest solution to stability problem. The court held that the additional expense associated with the addition of inhibitors would not discourage one of ordinary skill in the art from seeking the convenience expected therefrom.).

VIII. ARGUING ABOUT THE AGE OF REFERENCES

"The mere age of the references is not persuasive of the unobviousness of the combination of their teachings, absent evidence that, notwithstanding knowledge of the references, the art tried and failed to solve the problem." *In re Wright*, 569 F.2d 1124, 1127, 193 USPQ 332, 335 (CCPA 1977) (100 year old patent was properly relied upon in a rejection based on a combination of references.). See also *Ex parte Meyer*, 6 USPQ2d 1966 (Bd. Pat. App. & Inter. 1988) (length of time between the issuance of prior art patents relied upon (1920 and 1976) was not persuasive of unobviousness).

IX. ARGUING THAT PRIOR ART IS NONANALOGOUS

A prior art reference is analogous if the reference is in the field of applicant's endeavor or, if not, the reference is reasonably pertinent to the particular problem with which the inventor was concerned. *In re Oetiker*, 977 F.2d 1443, 1446, 24 USPQ2d 1443, 1445 (Fed. Cir. 1992).

See MPEP § 2141.01(a) for case law pertaining to analogous art.

X. ARGUING IMPROPER RATIONALES FOR COMBINING REFERENCES

A. *Impermissible Hindsight*

Applicants may argue that the examiner's conclusion of obviousness is based on improper hindsight reasoning. However, "[a]ny judgement on obviousness is in a sense necessarily a reconstruction based on hindsight reasoning, but so long as it takes into account only knowledge which was within the level of ordinary skill in the art at the time the claimed invention was made and does not include knowledge gleaned only from applicant's disclosure, such a reconstruction is proper." *In re McLaughlin* 443 F.2d 1392, 1395, 170 USPQ 209, 212 (CCPA 1971).

B. *Obvious To Try Rationale*

An applicant may argue the examiner is applying an improper "obvious to try" rationale in support of an obviousness rejection.

"The admonition that 'obvious to try' is not the standard under § 103 has been directed mainly at two kinds of error. In some cases, what would have been 'obvious to try' would have been to vary all parameters or try each of numerous possible choices until one possibly arrived at a successful result, where the prior art gave either no indication of which parameters were critical or no direction as to which of many possible choices is likely to be successful.... In others, what was 'obvious to try' was to explore a new technology or general approach that seemed to be a promising field of experimentation, where the prior art gave only general guidance as to the particular form of the claimed invention or how to achieve it." *In re O'Farrell*, 853 F.2d 894, 903, 7 USPQ2d 1673, 1681 (Fed. Cir. 1988) (citations omitted) (The court held the claimed method would have been obvious over the prior art relied upon because one reference contained a detailed enabling methodology, a suggestion to modify the prior art to produce the claimed invention, and evidence suggesting the modification would be successful.). See the cases cited in *O'Farrell* for examples of decisions where the court discussed an improper "obvious to try" approach. See also *In re Eli Lilly & Co.*, 902 F.2d 943, 14 USPQ2d 1741 (Fed. Cir. 1990) and *In re Ball Corp.*, 925 F.2d 1480, 18 USPQ2d 1491 (Fed. Cir. 1991) (unpublished) for examples of cases where appellants argued that an improper "obvious to try" standard was applied, but the court found that there was proper motivation to modify the references.

C. *Lack of Suggestion To Combine References*

As discussed in MPEP § 2143.01, there must be some suggestion or motivation, either in the references themselves or in the knowledge generally available to one of ordinary skill in the art, to modify or combine reference teachings. The Federal Circuit has produced a number of decisions overturning obviousness rejections due to a lack of suggestion in the prior art of the desirability of combining references, as discussed in the aforementioned section.

D. *References Teach Away from the Invention or Render Prior Art Unsatisfactory for Intended Purpose*

In addition to the material below, see MPEP § 2141.02 (prior art must be considered in its entirety, including disclosures that teach away from the claims) and MPEP § 2143.01 (proposed modification cannot render the prior art unsatisfactory for its intended purpose or change the principle of operation of a reference).

1. The Nature of the Teaching Is Highly Relevant

A prior art reference that "teaches away" from the claimed invention is a significant factor to be considered in determining obviousness; however, "the nature of the teaching is highly relevant and must be weighed in substance. A known or obvious composition does not become patentable simply because it has been described as somewhat inferior to some other product for the same use." *In re Gurley*, 27 F.3d 551, 554, 31 USPQ2d 1130, 1132 (Fed. Cir. 1994) (Claims were directed to an epoxy resin based printed circuit material. A prior art reference disclosed a polyester-imide resin based printed circuit material, and taught that although epoxy resin based materials have acceptable stability and some degree of flexibility, they are inferior to polyester-imide resin based materials. The court held the claims would have been obvious over the prior art because the reference taught

epoxy resin based material was useful for applicant's purpose, applicant did not distinguish the claimed epoxy from the prior art epoxy, and applicant asserted no discovery beyond what was known to the art.).

2. References Cannot Be Combined Where Reference Teaches Away from Their Combination

It is improper to combine references where the references teach away from their combination. *In re Grasselli*, 713 F.2d 731, 743, 218 USPQ 769, 779 (Fed. Cir. 1983) (The claimed catalyst which contained both iron and an alkali metal was not suggested by the combination of a reference which taught the interchangeability of antimony and alkali metal with the same beneficial result, combined with a reference expressly excluding antimony from, and adding iron to, a catalyst.).

3. Proceeding Contrary to Accepted Wisdom Is Evidence of Nonbviousness

The totality of the prior art must be considered, and proceeding contrary to accepted wisdom in the art is evidence of nonobviousness. *In re Hedges,* 783 F.2d 1038, 228 USPQ 685 (Fed. Cir. 1986) (Applicant's claimed process for sulfonating diphenyl sulfone at a temperature above 127°C was contrary to accepted wisdom because the prior art as a whole suggested using lower temperatures for optimum results as evidenced by charring, decomposition, or reduced yields at higher temperatures.).

Furthermore, "[k]nown disadvantages in old devices which would naturally discourage search for new inventions may be taken into account in determining obviousness." *United States v. Adams,* 383 U.S. 39, 52, 148 USPQ 479, 484 (1966).

XI. FORM PARAGRAPHS

See MPEP § 707.07(f) for form paragraphs 7.37 through 7.38 which may be used where applicant's arguments are not persuasive or are moot.

2146 35 U.S.C. 103(c)

35 U.S.C. 103. Conditions of patentability; non-obvious subject matter.

*****

(c) Subject matter developed by another person, which qualifies as prior art only under one or more subsections (e), (f), and (g) of section 102 of this title, shall not preclude patentability under this section where the subject matter and the claimed invention were, at the time the invention was made, owned by the same person or subject to an obligation of assignment to the same person.

Effective November 29, 1999, 35 U.S.C. 103(c) provides that subject matter developed by another which qualifies as "prior art" only under one or more of subsections 35 U.S.C. 102(e), (f) and (g) is not to be considered when determining whether an invention sought to be patented is obvious under 35 U.S.C. 103, provided the subject matter and the claimed invention were commonly owned at the time the invention was made. 35 U.S.C. 103(c) applies only to subject matter which qualifies as prior art under 35 U.S.C. 103; it does not affect subject matter which qualifies as prior art under 35 U.S.C. 102, i.e., anticipatory prior art. See MPEP § 706.02(l) - § 706.02(l)(3).

2161 Three Separate Requirements for Specification Under 35 U.S.C. 112, First Paragraph

THE SPECIFICATION MUST INCLUDE A WRITTEN DESCRIPTION OF THE INVENTION, ENABLEMENT, AND BEST MODE OF CARRYING OUT THE CLAIMED INVENTION

The first paragraph of 35 U.S.C. 112 provides:

> The specification shall contain a written description of the invention, and of the manner and process of making and using it, in such full, clear, concise, and exact terms as to enable any person skilled in the art to which it pertains, or with which it is most nearly connected, to make and use the same, and shall set forth the best mode contemplated by the inventor of carrying out his invention. [emphasis added].

This section of the statute requires that the specification include the following:

(A) A written description of the invention;

(B) The manner and process of making and using the invention (the enablement requirement); and

(C) The best mode contemplated by the inventor of carrying out his invention.

THE THREE REQUIREMENTS ARE SEPARATE AND DISTINCT FROM EACH OTHER

The written description requirement is separate and distinct from the enablement requirement. *In re Barker*, 559 F.2d 588, 194 USPQ 470 (CCPA 1977), *cert. denied*, 434 U.S. 1064 (1978); *Vas-Cath, Inc. v. Mahurkar*, 935 F.2d 1555, 1562, 19 USPQ2d 1111, 1115 (Fed. Cir. 1991) (While acknowledging that some of its cases concerning the written description requirement and the enablement requirement are confusing, the Federal Circuit reaffirmed that under 35 U.S.C. 112, first paragraph, the written description requirement is separate and distinct from the enablement requirement and gave an example thereof.). An invention may be described without the disclosure being enabling (e.g., a chemical compound for which there is no disclosed or apparent method of making), and a disclosure could be enabling without describing the invention (e.g., a specification describing a method of making and using a paint composition made of functionally defined ingredients within broad ranges would be enabling for formulations falling within the description but would not describe any specific formulation). See *In re Armbruster*, 512 F.2d 676, 677, 185 USPQ 152, 153 (CCPA 1975) ("[A] specification which 'describes' does not necessarily also 'enable' one skilled in the art to make or use the claimed invention."). Best mode is a separate and distinct requirement from the enablement requirement. *In re Newton*, 414 F.2d 1400, 163 USPQ 34 (CCPA 1969).

2162 Policy Underlying 35 U.S.C. 112, First Paragraph

To obtain a valid patent, a patent application must be filed that contains a full and clear disclosure of the invention in the manner prescribed by 35 U.S.C. 112, first paragraph. The requirement for an adequate disclosure ensures that the public receives something in return for the exclusionary rights that are granted to the inventor by a patent. The grant of a patent helps to foster and enhance the development and disclosure of new ideas and the advancement of scientific knowledge. Upon the grant of a patent in the U.S., information contained in the patent becomes a part of the information available to the public for further research and development, subject only to the patentee's right to exclude others during the life of the patent.

In exchange for the patent rights granted, 35 U.S.C. 112, first paragraph, sets forth the minimum requirements for the quality and quantity of information that must be contained in the patent to justify the grant. As discussed in more detail below, the patentee must disclose in the patent sufficient information to put the public in possession of the invention and to enable those skilled in the art to make and use the invention. The applicant must not conceal from the public the best way of practicing the invention that was known to the patentee at the time of filing the patent application. Failure to fully comply with the disclosure requirements could result in the denial of a patent, or in a holding of invalidity of an issued patent.

2163 Guidelines for the Examination of Patent Applications Under the 35 U.S.C. 112, para. 1, "Written Description" Requirement

The following Guidelines establish the policies and procedures to be followed by Office personnel in the evaluation of any patent application for compliance with the written description requirement of 35 U.S.C. 112. These Guidelines are based on the Office's current understanding of the law and are believed to be fully consistent with binding precedent of the U.S. Supreme Court, as well as the U.S. Court of Appeals for the Federal Circuit and its predecessor courts.

The Guidelines do not constitute substantive rulemaking and hence do not have the force and effect of law. They are designed to assist Office personnel in analyzing claimed subject matter for compliance with substantive law. Rejections will be based upon the substantive law, and it is these rejections which are appealable. Consequently, any perceived failure by Office personnel to follow these Guidelines is neither appealable nor petitionable.

These Guidelines are intended to form part of the normal examination process. Thus, where Office personnel establish a prima facie case of lack of written description for a claim, a thorough review of the prior art and examination on the merits for compliance with the other statutory requirements, including those of 35 U.S.C. 101, 102, 103, and 112, is to be conducted

prior to completing an Office action which includes a rejection for lack of written description.

I. GENERAL PRINCIPLES GOVERNING COMPLIANCE WITH THE "WRITTEN DESCRIPTION" REQUIREMENT FOR APPLICATIONS

The first paragraph of 35 U.S.C. 112 requires that the "specification shall contain a written description of the invention * * *." This requirement is separate and distinct from the enablement requirement. See, e.g., *Vas-Cath, Inc. v. Mahurkar*, 935 F.2d 1555, 1560, 19 USPQ2d 1111, 1114 (Fed. Cir. 1991). The written description requirement has several policy objectives. "[T]he 'essential goal' of the description of the invention requirement is to clearly convey the information that an applicant has invented the subject matter which is claimed." *In re Barker*, 559 F.2d 588, 592 n.4, 194 USPQ 470, 473 n.4 (CCPA 1977). Another objective is to put the public in possession of what the applicant claims as the invention. See *Regents of the University of California v. Eli Lilly*, 119 F.3d 1559, 1566, 43 USPQ2d 1398, 1404 (Fed. Cir. 1997), *cert. denied*, 523 U.S. 1089 (1998). The written description requirement of the Patent Act promotes the progress of the useful arts by ensuring that patentees adequately describe their inventions in their patent specifications in exchange for the right to exclude others from practicing the invention for the duration of the patent's term.

To satisfy the written description requirement, a patent specification must describe the claimed invention in sufficient detail that one skilled in the art can reasonably conclude that the inventor had possession of the claimed invention. See, e.g., *Vas-Cath, Inc. v. Mahurkar*, 935 F.2d at 1563, 19 USPQ2d at 1116. Much of the written description case law addresses whether the specification as originally filed supports claims not originally in the application. The issue raised in the cases is most often phrased as whether the original application provides "adequate support" for the claims at issue or whether the material added to the specification incorporates "new matter" in violation of 35 U.S.C. 132. The "written description" question similarly arises in the interference context, where the issue is whether the specification of one party to the interference can support the newly added claims corresponding to the count at issue, i.e., whether that party can "make the claim" corresponding to the interference count. See, e.g., *Martin v. Mayer*, 823 F.2d 500, 503, 3 USPQ2d 1333, 1335 (Fed. Cir. 1987). In addition, early opinions suggest the Patent and Trademark Office was unwilling to find written descriptive support when the only description was found in the claims; however, this viewpoint was rejected. See *In re Koller*, 613 F.2d 819, 204 USPQ 702 (CCPA 1980) (original claims constitute their own description); *accord In re Gardner*, 475 F.2d 1389, 177 USPQ 396 (CCPA 1973); *accord In re Wertheim*, 541 F.2d 257, 191 USPQ 90 (CCPA 1976). It is now well accepted that a satisfactory description may be in the claims or any other portion of the originally filed specification. These early opinions did not address the quality or specificity of particularity that was required in the description, i.e., how much description is enough.

An applicant shows possession of the claimed invention by describing the claimed invention with all of its limitations using such descriptive means as words, structures, figures, diagrams, and formulas that fully set forth the claimed invention. *Lockwood v. American Airlines, Inc.*, 107 F.3d 1565, 1572, 41 USPQ2d 1961, 1966 (Fed. Cir. 1997). Possession may be shown in a variety of ways including description of an actual reduction to practice, or by showing that the invention was "ready for patenting" such as by the disclosure of drawings or structural chemical formulas that show that the invention was complete, or by describing distinguishing identifying characteristics sufficient to show that the applicant was in possession of the claimed invention. See, e.g., *Pfaff v. Wells Electronics, Inc.*, 525 U.S. 55, 68, 119 S.Ct. 304, 312, 48 USPQ2d 1641, 1647 (1998); *Eli Lilly*, 119 F.3d at 1568, 43 USPQ2d at 1406; *Amgen, Inc. v. Chugai Pharmaceutical*, 927 F.2d 1200, 1206, 18 USPQ2d 1016, 1021 (Fed. Cir. 1991) (one must define a compound by "whatever characteristics sufficiently distinguish it"). An application specification may show actual reduction to practice by describing testing of the claimed invention or, in the case of biological materials, by specifically describing a deposit made in accordance with 37 CFR 1.801 *et seq.* See also Deposit of Biological Materials for Patent Purposes, Final Rule, 54 FR 34,864 (August 22, 1989) ("The requirement for a specific identification is consistent with the description requirement of the first

paragraph of 35 U.S.C. 112, and to provide an antecedent basis for the biological material which either has been or will be deposited before the patent is granted." Id. at 34,876. "The description must be sufficient to permit verification that the deposited biological material is in fact that disclosed. Once the patent issues, the description must be sufficient to aid in the resolution of questions of infringement." Id. at 34,880.). Such a deposit is not a substitute for a written description of the claimed invention. The written description of the deposited material needs to be as complete as possible because the examination for patentability proceeds solely on the basis of the written description. See, e.g., *In re Lundak*, 773 F.2d 1216, 227 USPQ 90 (Fed. Cir. 1985). See also 54 FR at 34,880 ("As a general rule, the more information that is provided about a particular deposited biological material, the better the examiner will be able to compare the identity and characteristics of the deposited biological material with the prior art.").

A question as to whether a specification provides an adequate written description may arise in the context of an original claim which is not described sufficiently (see, e.g., *Eli Lilly*, 119 F.3d 1559, 43 USPQ2d 1398), a new or amended claim wherein a claim limitation has been added or removed, or a claim to entitlement of an earlier priority date or effective filing date under 35 U.S.C. 119, 120, or 365(c). Most typically, the issue will arise in the context of determining whether new or amended claims are supported by the description of the invention in the application as filed (see, e.g., *In re Wright*, 866 F.2d 422, 9 USPQ2d 1649 (Fed. Cir. 1989)), whether a claimed invention is entitled to the benefit of an earlier priority date or effective filing date under 35 U.S.C. 119, 120, or 365(c) (see, e.g., *Tronzo v. Biomet, Inc.*, 156 F.3d 1154, 47 USPQ2d 1829 (Fed. Cir. 1998); Fiers v. Revel, 984 F.2d 1164, 25 USPQ2d 1601 (Fed. Cir. 1993); *In re Ziegler*, 992 F.2d 1197, 1200, 26 USPQ2d 1600, 1603 (Fed. Cir. 1993)), or whether a specification provides support for a claim corresponding to a count in an interference (see, e.g., *Fields v. Conover*, 443 F.2d 1386, 170 USPQ 276 (CCPA 1971)). Compliance with the written description requirement is a question of fact which must be resolved on a case-by-case basis. *Vas-Cath, Inc. v. Mahurkar*, 935 F.2d at 1563, 19 USPQ2d at 1116 (Fed. Cir. 1991).

A. Original Claims

There is a strong presumption that an adequate written description of the claimed invention is present when the application is filed. *In re Wertheim*, 541 F.2d 257, 263, 191 USPQ 90, 97 (CCPA 1976) ("we are of the opinion that the PTO has the initial burden of presenting evidence or reasons why persons skilled in the art would not recognize in the disclosure a description of the invention defined by the claims"). However, as discussed in paragraph I., *supra*, the issue of a lack of adequate written description may arise even for an original claim when an aspect of the claimed invention has not been described with sufficient particularity such that one skilled in the art would recognize that the applicant had possession of the claimed invention. The claimed invention as a whole may not be adequately described if the claims require an essential or critical feature which is not adequately described in the specification and which is not conventional in the art or known to one of ordinary skill in the art. For example, consider the claim "A gene comprising SEQ ID NO:1." A determination of what the claim as a whole covers may result in a conclusion that specific structures such as a promoter, a coding region, or other elements are included. Although all genes encompassed by this claim share the characteristic of comprising SEQ ID NO:1, there may be insufficient description of those specific structures (e.g., promoters, enhancers, coding regions, and other regulatory elements) which are also included.

The claimed invention as a whole may not be adequately described where an invention is described solely in terms of a method of its making coupled with its function and there is no described or art-recognized correlation or relationship between the structure of the invention and its function. A biomolecule sequence described only by a functional characteristic, without any known or disclosed correlation between that function and the structure of the sequence, normally is not a sufficient identifying characteristic for written description purposes, even when accompanied by a method of obtaining the claimed sequence. For example, even though a genetic code table would correlate a known amino acid sequence with a genus of coding nucleic acids, the same table cannot predict the native, naturally occurring nucleic acid sequence of a naturally occurring mRNA or its corresponding cDNA. Cf. *In re Bell*,

991 F.2d 781, 26 USPQ2d 1529 (Fed. Cir. 1993), and *In re Deuel*, 51 F.3d 1552, 34 USPQ2d 1210 (Fed. Cir. 1995) (holding that a process could not render the product of that process obvious under 35 U.S.C. 103). The Federal Circuit has pointed out that under United States law, a description that does not render a claimed invention obvious cannot sufficiently describe the invention for the purposes of the written description requirement of 35 U.S.C. 112. *Eli Lilly*, 119 F.3d at 1567, 43 USPQ2d at 1405. Compare *Fonar Corp. v. General Electric Co.*, 107 F.3d 1543, 1549, 41 USPQ2d 1801, 1805 (Fed. Cir. 1997) ("As a general rule, where software constitutes part of a best mode of carrying out an invention, description of such a best mode is satisfied by a disclosure of the functions of the software. This is because, normally, writing code for such software is within the skill of the art, not requiring undue experimentation, once its functions have been disclosed. * * * Thus, flow charts or source code listings are not a requirement for adequately disclosing the functions of software.").

A lack of adequate written description issue also arises if the knowledge and level of skill in the art would not permit one skilled in the art to immediately envisage the product claimed from the disclosed process. See, e.g., *Fujikawa v. Wattanasin*, 93 F.3d 1559, 1571, 39 USPQ2d 1895, 1905 (Fed. Cir. 1996) (a "laundry list" disclosure of every possible moiety does not constitute a written description of every species in a genus because it would not "reasonably lead" those skilled in the art to any particular species); *In re Ruschig*, 379 F.2d 990, 995, 154 USPQ 118, 123 (CCPA 1967) ("*If* n-propylamine had been used in making the compound instead of n-butylamine, the compound of claim 13 would have resulted. Appellants submit to us, as they did to the board, an imaginary specific example patterned on specific example 6 by which the above butyl compound is made so that we can see what a simple change would have resulted in a specific supporting disclosure being present in the present specification. The trouble is that there is no such disclosure, easy though it is to imagine it.") (emphasis in original); *Purdue Pharma L.P. v. Faulding Inc.*, 230 F.3d 1320, 1328, 56 USPQ2d 1481, 1487 (Fed. Cir. 2000) ("the specification does not clearly disclose to the skilled artisan that the inventors * * * considered the [] ratio to be part of their invention * * *. There is therefore no force to Purdue's argument that the written description requirement was satisfied because the disclosure revealed a broad invention from which the [later-filed] claims carved out a patentable portion").

B. New or Amended Claims

The proscription against the introduction of new matter in a patent application (35 U.S.C. 132 and 251) serves to prevent an applicant from adding information that goes beyond the subject matter originally filed. See *In re Rasmussen*, 650 F.2d 1212, 1214, 211 USPQ 323, 326 (CCPA 1981). See MPEP § 2163.06 through § 2163.07 for a more detailed discussion of the written description requirement and its relationship to new matter. The claims as filed in the original specification are part of the disclosure and, therefore, if an application as originally filed contains a claim disclosing material not found in the remainder of the specification, the applicant may amend the specification to include the claimed subject matter. *In re Benno*, 768 F.2d 1340, 226 USPQ 683 (Fed. Cir. 1985). Thus, the written description requirement prevents an applicant from claiming subject matter that was not adequately described in the specification as filed. New or amended claims which introduce elements or limitations which are not supported by the as-filed disclosure violate the written description requirement. See, e.g., *In re Lukach*, 442 F.2d 967, 169 USPQ 795 (CCPA 1971) (subgenus range was not supported by generic disclosure and specific example within the subgenus range); *In re Smith*, 458 F.2d 1389, 1395, 173 USPQ 679, 683 (CCPA 1972) (a subgenus is not necessarily described by a genus encompassing it and a species upon which it reads).

While there is no *in haec verba* requirement, newly added claim limitations must be supported in the specification through express, implicit, or inherent disclosure. An amendment to correct an obvious error does not constitute new matter where one skilled in the art would not only recognize the existence of the error in the specification, but also recognize the appropriate correction. *In re Oda*, 443 F.2d 1200, 170 USPQ 268 (CCPA 1971). With respect to the correction of sequencing errors in applications disclosing nucleic acid and/or amino acid sequences, it is well known that sequencing errors are a common problem in molecular biology. See, e.g.,

Peter Richterich, Estimation of Errors in 'Raw' DNA Sequences: A Validation Study, 8 *Genome Research* 251-59 (1998). If an application as filed includes sequence information and references a deposit of the sequenced material made in accordance with the requirements of 37 CFR 1.801 *et seq.*, amendment may be permissible. Deposits made after the application filing date cannot be relied upon to support additions to or correction of information in the application as filed. Corrections of minor errors in the sequence may be possible based on the argument that one of skill in the art would have resequenced the deposited material and would have immediately recognized the minor error. Deposits made after the filing date can only be relied upon to provide support for the correction of sequence information if applicant submits a statement in compliance with 37 CFR 1.804 stating that the biological material which is deposited is a biological material specifically defined in the application as filed.

Under certain circumstances, omission of a limitation can raise an issue regarding whether the inventor had possession of a broader, more generic invention. See, e.g., *Gentry Gallery, Inc. v. Berkline Corp.*, 134 F.3d 1473, 45 USPQ2d 1498 (Fed. Cir. 1998) (claims to a sectional sofa comprising, inter alia, a console and a control means were held invalid for failing to satisfy the written description requirement where the claims were broadened by removing the location of the control means.); *Johnson Worldwide Associates v. Zebco Corp.*, 175 F.3d 985, 993, 50 USPQ2d 1607, 1613 (Fed. Cir. 1999) (In *Gentry Gallery*, the "court's determination that the patent disclosure did not support a broad meaning for the disputed claim terms was premised on clear statements in the written description that described the location of a claim element--the 'control means' --as 'the only possible location' and that variations were 'outside the stated purpose of the invention.' *Gentry Gallery*, 134 F.3d at 1479, 45 USPQ2d at 1503. *Gentry Gallery*, then, considers the situation where the patent's disclosure makes crystal clear that a particular (i.e., narrow) understanding of a claim term is an 'essential element of [the inventor's] invention.'"); *Tronzo v. Biomet*, 156 F.3d at 1158-59, 47 USPQ2d at 1833 (Fed. Cir. 1998) (claims to generic cup shape were not entitled to filing date of parent application which disclosed "conical cup" in view of the disclosure of the parent application stating the advantages and importance of the conical shape.). A claim that omits an element which applicant describes as an essential or critical feature of the invention originally disclosed does not comply with the written description requirement. See *Gentry Gallery*, 134 F.3d at 1480, 45 USPQ2d at 1503; *In re Sus*, 306 F.2d 494, 504, 134 USPQ 301, 309 (CCPA 1962) ("[O]ne skilled in this art would not be taught by the written description of the invention in the specification that any 'aryl or substituted aryl radical' would be suitable for the purposes of the invention but rather that only certain aryl radicals and certain specifically substituted aryl radicals [i.e., aryl azides] would be suitable for such purposes.") (emphasis in original). A claim which omits matter disclosed to be essential to the invention as described in the specification or in other statements of record may also be subject to rejection under 35 U.S.C. 112, para. 1, as not enabling, or under 35 U.S.C. 112, para. 2. See *In re Mayhew*, 527 F.2d 1229, 188 USPQ 356 (CCPA 1976); *In re Venezia*, 530 F.2d 956, 189 USPQ 149 (CCPA 1976); and *In re Collier*, 397 F.2d 1003, 158 USPQ 266 (CCPA 1968). See also MPEP § 2172.01.

The fundamental factual inquiry is whether the specification conveys with reasonable clarity to those skilled in the art that, as of the filing date sought, applicant was in possession of the invention as now claimed. See, e.g., *Vas-Cath, Inc.*, 935 F.2d at 1563-64, 19 USPQ2d at 1117.

II. METHODOLOGY FOR DETERMINING ADEQUACY OF WRITTEN DESCRIPTION

A. *Read and Analyze the Specification for Compliance with 35 U.S.C. 112, para. 1*

Office personnel should adhere to the following procedures when reviewing patent applications for compliance with the written description requirement of 35 U.S.C. 112, para. 1. The examiner has the initial burden, after a thorough reading and evaluation of the content of the application, of presenting evidence or reasons why a person skilled in the art would not recognize that the written description of the invention provides support for the claims. There is a strong presumption that an adequate written description of the claimed invention is present in the specification as

filed, *Wertheim*, 541 F.2d at 262, 191 USPQ at 96; however, with respect to newly added or amended claims, applicant should show support in the original disclosure for the new or amended claims. See MPEP § 714.02 and § 2163.06 ("Applicant should * * * specifically point out the support for any amendments made to the disclosure."); and MPEP § 2163.04 ("If applicant amends the claims and points out where and/or how the originally filed disclosure supports the amendment(s), and the examiner finds that the disclosure does not reasonably convey that the inventor had possession of the subject matter of the amendment at the time of the filing of the application, the examiner has the initial burden of presenting evidence or reasoning to explain why persons skilled in the art would not recognize in the disclosure a description of the invention defined by the claims."). Consequently, rejection of an original claim for lack of written description should be rare. The inquiry into whether the description requirement is met is a question of fact that must be determined on a case-by-case basis. See *In re Smith*, 458 F.2d 1389, 1395, 173 USPQ 679, 683 (CCPA 1972) ("Precisely how close [to the claimed invention] the description must come to comply with Sec. 112 must be left to case-by-case development."); *In re Wertheim*, 541 F.2d at 262, 191 USPQ at 96 (inquiry is primarily factual and depends on the nature of the invention and the amount of knowledge imparted to those skilled in the art by the disclosure).

1. For Each Claim, Determine What the Claim as a Whole Covers

Claim construction is an essential part of the examination process. Each claim must be separately analyzed and given its broadest reasonable interpretation in light of and consistent with the written description. See, e.g., *In re Morris*, 127 F.3d 1048, 1053-54, 44 USPQ2d 1023, 1027 (Fed. Cir. 1997). The entire claim must be considered, including the preamble language and the transitional phrase. "Preamble language" is that language in a claim appearing before the transitional phase, e.g., before "comprising," "consisting essentially of," or "consisting of." The transitional term "comprising" (and other comparable terms, e.g., "containing," and "including") is "open-ended" -it covers the expressly recited subject matter, alone or in combination with unrecited subject matter. See, e.g., *Genentech, Inc. v. Chiron Corp.*, 112 F.3d 495, 501, 42 USPQ2d 1608, 1613 (Fed. Cir. 1997) (" 'Comprising' is a term of art used in claim language which means that the named elements are essential, but other elements may be added and still form a construct within the scope of the claim."); *Ex parte Davis*, 80 USPQ 448, 450 (Bd. App. 1948) ("comprising" leaves the "claim open for the inclusion of unspecified ingredients even in major amounts"). See also MPEP § 2111.03. "By using the term 'consisting essentially of,' the drafter signals that the invention necessarily includes the listed ingredients and is open to unlisted ingredients that do not materially affect the basic and novel properties of the invention. A 'consisting essentially of' claim occupies a middle ground between closed claims that are written in a 'consisting of' format and fully open claims that are drafted in a 'comprising' format." *PPG Industries v. Guardian Industries*, 156 F.3d 1351, 1354, 48 USPQ2d 1351, 1353-54 (Fed. Cir. 1998). For the purposes of searching for and applying prior art under 35 U.S.C. 102 and 103, absent a clear indication in the specification or claims of what the basic and novel characteristics actually are, "consisting essentially of" will be construed as equivalent to "comprising." See, e.g., *PPG*, 156 F.3d at 1355, 48 USPQ2d at 1355 ("PPG could have defined the scope of the phrase 'consisting essentially of' for purposes of its patent by making clear in its specification what it regarded as constituting a material change in the basic and novel characteristics of the invention."). See also *In re Janakirama-Rao*, 317 F.2d 951, 954, 137 USPQ 893, 895-96 (CCPA 1963). If an applicant contends that additional steps or materials in the prior art are excluded by the recitation of "consisting essentially of," applicant has the burden of showing that the introduction of additional steps or components would materially change the characteristics of applicant's invention. *In re De Lajarte*, 337 F.2d 870, 143 USPQ 256 (CCPA 1964). See also MPEP § 2111.03. The claim as a whole, including all limitations found in the preamble (see *Pac-Tec Inc. v. Amerace Corp.*, 903 F.2d 796, 801, 14 USPQ2d 1871, 1876 (Fed. Cir. 1990) (determining that preamble language that constitutes a structural limitation is actually part of the claimed invention)), the transitional phrase, and the body of the claim, must be sufficiently supported to satisfy the written description requirement. An applicant shows possession of the claimed invention by describing the

claimed invention with all of its limitations. *Lockwood*, 107 F.3d at 1572, 41 USPQ2d at 1966.

The examiner should evaluate each claim to determine if sufficient structures, acts, or functions are recited to make clear the scope and meaning of the claim, including the weight to be given the preamble. See, e.g., *Bell Communications Research, Inc. v. Vitalink Communications Corp.*, 55 F.3d 615, 620, 34 USPQ2d 1816, 1820 (Fed. Cir. 1995) ("[A] claim preamble has the import that the claim as a whole suggests for it."); *Corning Glass Works v. Sumitomo Elec. U.S.A., Inc.*, 868 F.2d 1251, 1257, 9 USPQ2d 1962, 1966 (Fed. Cir. 1989) (The determination of whether preamble recitations are structural limitations can be resolved only on review of the entirety of the application "to gain an understanding of what the inventors actually invented and intended to encompass by the claim."). The absence of definitions or details for well-established terms or procedures should not be the basis of a rejection under 35 U.S.C. 112, para. 1, for lack of adequate written description. Limitations may not, however, be imported into the claims from the specification.

2. Review the Entire Application to Understand How Applicant Provides Support for the Claimed Invention Including Each Element and/or Step

Prior to determining whether the disclosure satisfies the written description requirement for the claimed subject matter, the examiner should review the claims and the entire specification, including the specific embodiments, figures, and sequence listings, to understand how applicant provides support for the various features of the claimed invention. An element may be critical where those of skill in the art would require it to determine that applicant was in possession of the invention. Compare *Rasmussen*, 650 F.2d at 1215, 211 USPQ at 327 ("one skilled in the art who read Rasmussen's specification would understand that it is unimportant how the layers are adhered, so long as they are adhered") (emphasis in original), with *Amgen, Inc. v. Chugai Pharmaceutical Co., Ltd.*, 927 F.2d 1200, 1206, 18 USPQ2d 1016, 1021 (Fed. Cir. 1991) ("it is well established in our law that conception of a chemical compound requires that the inventor be able to define it so as to distinguish it from other materials, and to describe how to obtain it"). The analysis of whether the specification complies with the written description requirement calls for the examiner to compare the scope of the claim with the scope of the description to determine whether applicant has demonstrated possession of the claimed invention. Such a review is conducted from the standpoint of one of skill in the art at the time the application was filed (see, e.g., *Wang Labs. v. Toshiba Corp.*, 993 F.2d 858, 865, 26 USPQ2d 1767, 1774 (Fed. Cir. 1993)) and should include a determination of the field of the invention and the level of skill and knowledge in the art. Generally, there is an inverse correlation between the level of skill and knowledge in the art and the specificity of disclosure necessary to satisfy the written description requirement. Information which is well known in the art need not be described in detail in the specification. See, e.g., *Hybritech, Inc. v. Monoclonal Antibodies, Inc.*, 802 F.2d 1367, 1379-80, 231 USPQ 81, 90 (Fed. Cir. 1986).

3. Determine Whether There is Sufficient Written Description to Inform a Skilled Artisan That Applicant was in Possession of the Claimed Invention as a Whole at the Time the Application Was Filed

(a) Original claims

Possession may be shown in many ways. For example, possession may be shown by describing an actual reduction to practice of the claimed invention. Possession may also be shown by a clear depiction of the invention in detailed drawings or in structural chemical formulas which permit a person skilled in the art to clearly recognize that applicant had possession of the claimed invention. An adequate written description of the invention may be shown by any description of sufficient, relevant, identifying characteristics so long as a person skilled in the art would recognize that the inventor had possession of the claimed invention. See, e.g., *Purdue Pharma L.P. v. Faulding Inc.*, 230 F.3d 1320, 1323, 56 USPQ2d 1481, 1483 (Fed. Cir. 2000) (the written description "inquiry is a factual one and must be assessed on a case-by-case basis"); see also *Pfaff v. Wells Electronics, Inc.*, 55 U.S. at 66, 119 S.Ct. at 311, 48 USPQ2d at 1646 ("The word 'invention' must refer to a concept that is complete, rather than merely one that is 'substantially complete.' It is true that reduction to practice ordinarily provides the

best evidence that an invention is complete. But just because reduction to practice is sufficient evidence of completion, it does not follow that proof of reduction to practice is necessary in every case. Indeed, both the facts of the Telephone Cases and the facts of this case demonstrate that one can prove that an invention is complete and ready for patenting before it has actually been reduced to practice.").

A specification may describe an actual reduction to practice by showing that the inventor constructed an embodiment or performed a process that met all the limitations of the claim and determined that the invention would work for its intended purpose. *Cooper v. Goldfarb*, 154 F.3d 1321, 1327, 47 USPQ2d 1896, 1901 (Fed. Cir. 1998). See also *UMC Elecs. Co. v. United States*, 816 F.2d 647, 652, 2 USPQ2d 1465, 1468 (Fed. Cir. 1987) ("[T]here cannot be a reduction to practice of the invention * * * without a physical embodiment which includes all limitations of the claim."); *Estee Lauder Inc. v. L'Oreal, S.A.*, 129 F.3d 588, 593, 44 USPQ2d 1610, 1614 (Fed. Cir. 1997) ("[A] reduction to practice does not occur until the inventor has determined that the invention will work for its intended purpose."); *Mahurkar v. C.R. Bard, Inc.*, 79 F.3d 1572, 1578, 38 USPQ2d 1288, 1291 (Fed. Cir. 1996) (determining that the invention will work for its intended purpose may require testing depending on the character of the invention and the problem it solves). Description of an actual reduction to practice of a biological material may be shown by specifically describing a deposit made in accordance with the requirements of 37 CFR 1.801 *et seq*. See especially 37 CFR 1.804 and 1.809. See also paragraph I., *supra*.

An applicant may show possession of an invention by disclosure of drawings or structural chemical formulas that are sufficiently detailed to show that applicant was in possession of the claimed invention as a whole. See, e.g., *Vas-Cath*, 935 F.2d at 1565, 19 USPQ2d at 1118 ("drawings alone may provide a 'written description' of an invention as required by Sec. 112\"); *In re Wolfensperger*, 302 F.2d 950, 133 USPQ 537 (CCPA 1962) (the drawings of applicant's specification provided sufficient written descriptive support for the claim limitation at issue); *Autogiro Co. of America v. United States*, 384 F.2d 391, 398, 155 USPQ 697, 703 (Ct. Cl. 1967) ("In those instances where a visual representation can flesh out words, drawings may be used in the same manner and with the same limitations as the specification."); *Eli Lilly*, 119 F.3d at 1568, 43 USPQ2d at 1406 ("In claims involving chemical materials, generic formulae usually indicate with specificity what the generic claims encompass. One skilled in the art can distinguish such a formula from others and can identify many of the species that the claims encompass. Accordingly, such a formula is normally an adequate description of the claimed genus."). The description need only describe in detail that which is new or not conventional. See *Hybritech v. Monoclonal Antibodies*, 802 F.2d at 1384, 231 USPQ at 94; *Fonar Corp. v. General Electric Co.*, 107 F.3d at 1549, 41 USPQ2d at 1805 (source code description not required). This is equally true whether the claimed invention is directed to a product or a process.

An applicant may also show that an invention is complete by disclosure of sufficiently detailed, relevant identifying characteristics which provide evidence that applicant was in possession of the claimed invention, i.e., complete or partial structure, other physical and/or chemical properties, functional characteristics when coupled with a known or disclosed correlation between function and structure, or some combination of such characteristics. For example, the presence of a restriction enzyme map of a gene may be relevant to a statement that the gene has been isolated. One skilled in the art may be able to determine whether the gene disclosed is the same as or different from a gene isolated by another by comparing the restriction enzyme maps. In contrast, evidence that the gene could be digested with a nuclease would not normally represent a relevant characteristic since any gene would be digested with a nuclease. Similarly, isolation of an mRNA and its expression to produce the protein of interest is strong evidence of possession of an mRNA for the protein.

For some biomolecules, examples of identifying characteristics include a sequence, structure, binding affinity, binding specificity, molecular weight, and length. Although structural formulas provide a convenient method of demonstrating possession of specific molecules, other identifying characteristics or combinations of characteristics may demonstrate the requisite possession. For example, unique cleavage by particular enzymes, isoelectric points of fragments, detailed restriction enzyme maps, a comparison of

enzymatic activities, or antibody cross-reactivity may be sufficient to show possession of the claimed invention to one of skill in the art. See *Lockwood*, 107 F.3d at 1572, 41 USPQ2d at 1966 ("written description" requirement may be satisfied by using "such descriptive means as words, structures, figures, diagrams, formulas, etc., that fully set forth the claimed invention"). A definition by function alone "does not suffice" to sufficiently describe a coding sequence "because it is only an indication of what the gene does, rather than what it is." *Eli Lilly*, 119 F.3 at 1568, 43 USPQ2d at 1406. See also *Fiers*, 984 F.2d at 1169-71, 25 USPQ2d at 1605-06 (discussing *Amgen Inc. v. Chugai Pharmaceutical Co.*, 927 F.2d 1200, 18 USPQ2d 1016 (Fed. Cir. 1991)).

If a claim limitation invokes 35 U.S.C. 112, para. 6, it must be interpreted to cover the corresponding structure, materials, or acts in the specification and "equivalents thereof." See 35 U.S.C. 112, para. 6. See also *B. Braun Medical, Inc. v. Abbott Lab.*, 124 F.3d 1419, 1424, 43 USPQ2d 1896, 1899 (Fed. Cir. 1997). In considering whether there is 35 U.S.C. 112, para. 1, support for a means- (or step) plus-function claim limitation, the examiner must consider not only the original disclosure contained in the summary and detailed description of the invention portions of the specification, but also the original claims, abstract, and drawings. A means- (or step-) plus-function claim limitation is adequately described under 35 U.S.C. 112, para. 1, if: (1) The written description adequately links or associates adequately described particular structure, material, or acts to the function recited in a means- (or step-) plus-function claim limitation; or (2) it is clear based on the facts of the application that one skilled in the art would have known what structure, material, or acts perform the function recited in a means- (or step-) plus-function limitation. Note also: A rejection under 35 U.S.C. 112, para. 2, "cannot stand where there is adequate description in the specification to satisfy 35 U.S.C. 112, first paragraph, regarding means-plus-function recitations that are not, per se, challenged for being unclear." *In re Noll*, 545 F.2d 141, 149, 191 USPQ 721, 727 (CCPA 1976). See Supplemental Examination Guidelines for Determining the Applicability of 35 U.S.C. 112, para. 6, 65 Fed. Reg. 38510, June 21, 2000. See also MPEP § 2181.

What is conventional or well known to one of ordinary skill in the art need not be disclosed in detail. See *Hybritech Inc. v. Monoclonal Antibodies, Inc.*, 802 F.2d at 1384, 231 USPQ at 94. If a skilled artisan would have understood the inventor to be in possession of the claimed invention at the time of filing, even if every nuance of the claims is not explicitly described in the specification, then the adequate description requirement is met. See, e.g., *Vas-Cath*, 935 F.2d at 1563, 19 USPQ2d at 1116; *Martin v. Johnson*, 454 F.2d 746, 751, 172 USPQ 391, 395 (CCPA 1972) (stating "the description need not be in *ipsis verbis* [i.e., "in the same words"] to be sufficient").

A claim which is limited to a single disclosed embodiment or species is analyzed as a claim drawn to a single embodiment or species, whereas a claim which encompasses two or more embodiments or species within the scope of the claim is analyzed as a claim drawn to a genus. See also MPEP § 806.04(e).

i) For Each Claim Drawn to a Single Embodiment Or Species:

(A) Determine whether the application describes an actual reduction to practice of the claimed invention.

(B) If the application does not describe an actual reduction to practice, determine whether the invention is complete as evidenced by a reduction to drawings or structural chemical formulas that are sufficiently detailed to show that applicant was in possession of the claimed invention as a whole.

(C) If the application does not describe an actual reduction to practice or reduction to drawings or structural chemical formula as discussed above, determine whether the invention has been set forth in terms of distinguishing identifying characteristics as evidenced by other descriptions of the invention that are sufficiently detailed to show that applicant was in possession of the claimed invention.

(1) Determine whether the application as filed describes the complete structure (or acts of a process) of the claimed invention as a whole. The complete structure of a species or embodiment typically satisfies the requirement that the description be set forth "in such full, clear, concise, and exact terms" to show possession of the claimed invention. 35 U.S.C. 112,

para. 1. Cf. *Fields v. Conover*, 443 F.2d 1386, 1392, 170 USPQ 276, 280 (CCPA 1971) (finding a lack of written description because the specification lacked the "full, clear, concise, and exact written description" which is necessary to support the claimed invention). If a complete structure is disclosed, the written description requirement is satisfied for that species or embodiment, and a rejection under 35 U.S.C. 112, para. 1, for lack of written description must not be made.

(2) If the application as filed does not disclose the complete structure (or acts of a process) of the claimed invention as a whole, determine whether the specification discloses other relevant identifying characteristics sufficient to describe the claimed invention in such full, clear, concise, and exact terms that a skilled artisan would recognize applicant was in possession of the claimed invention. For example, if the art has established a strong correlation between structure and function, one skilled in the art would be able to predict with a reasonable degree of confidence the structure of the claimed invention from a recitation of its function. Thus, the written description requirement may be satisfied through disclosure of function and minimal structure when there is a well-established correlation between structure and function. In contrast, without such a correlation, the capability to recognize or understand the structure from the mere recitation of function and minimal structure is highly unlikely. In this latter case, disclosure of function alone is little more than a wish for possession; it does not satisfy the written description requirement. See *Eli Lilly*, 119 F.3d at 1568, 43 USPQ2d at 1406 (written description requirement not satisfied by merely providing "a result that one might achieve if one made that invention"); *In re Wilder*, 736 F.2d 1516, 1521, 222 USPQ 369, 372-73 (Fed. Cir. 1984) (affirming a rejection for lack of written description because the specification does "little more than outline goals appellants hope the claimed invention achieves and the problems the invention will hopefully ameliorate"). Compare *Fonar*, 107 F.3d at 1549, 41 USPQ2d at 1805 (disclosure of software function adequate in that art).

Whether the specification shows that applicant was in possession of the claimed invention is not a single, simple determination, but rather is a factual determination reached by considering a number of factors. Factors to be considered in determining whether there is sufficient evidence of possession include the level of skill and knowledge in the art, partial structure, physical and/or chemical properties, functional characteristics alone or coupled with a known or disclosed correlation between structure and function, and the method of making the claimed invention. Disclosure of any combination of such identifying characteristics that distinguish the claimed invention from other materials and would lead one of skill in the art to the conclusion that the applicant was in possession of the claimed species is sufficient. See *Eli Lilly*, 119 F.3d at 1568, 43 USPQ2d at 1406. Patents and printed publications in the art should be relied upon to determine whether an art is mature and what the level of knowledge and skill is in the art. In most technologies which are mature, and wherein the knowledge and level of skill in the art is high, a written description question should not be raised for original claims even if the specification discloses only a method of making the invention and the function of the invention. See, e.g., *In re Hayes Microcomputer Products, Inc. Patent Litigation*, 982 F.2d 1527, 1534-35, 25 USPQ2d 1241, 1246 (Fed. Cir. 1992) ("One skilled in the art would know how to program a microprocessor to perform the necessary steps described in the specification. Thus, an inventor is not required to describe every detail of his invention. An applicant's disclosure obligation varies according to the art to which the invention pertains. Disclosing a microprocessor capable of performing certain functions is sufficient to satisfy the requirement of section 112, first paragraph, when one skilled in the relevant art would understand what is intended and know how to carry it out."). In contrast, for inventions in emerging and unpredictable technologies, or for inventions characterized by factors not reasonably predictable which are known to one of ordinary skill in the art, more evidence is required to show possession. For example, disclosure of only a method of making the invention and the function may not be sufficient to support a product claim other than a product-by-process claim. See, e.g., *Fiers v. Revel*, 984 F.2d at 1169, 25 USPQ2d at 1605; *Amgen.*, 927 F.2d at 1206, 18 USPQ2d at 1021. Where the process has actually been used to produce the product, the written description requirement for a product-by-process claim is clearly satisfied; however, the requirement may not be satisfied where it is not clear

that the acts set forth in the specification can be performed, or that the product is produced by that process. Furthermore, disclosure of a partial structure without additional characterization of the product may not be sufficient to evidence possession of the claimed invention. See, e.g., *Amgen*, 927 F.2d at 1206, 18 USPQ2d at 1021 ("A gene is a chemical compound, albeit a complex one, and it is well established in our law that conception of a chemical compound requires that the inventor be able to define it so as to distinguish it from other materials, and to describe how to obtain it. Conception does not occur unless one has a mental picture of the structure of the chemical, or is able to define it by its method of preparation, its physical or chemical properties, or whatever characteristics sufficiently distinguish it. It is not sufficient to define it solely by its principal biological property, e.g., encoding human erythropoietin, because an alleged conception having no more specificity than that is simply a wish to know the identity of any material with that biological property. We hold that when an inventor is unable to envision the detailed constitution of a gene so as to distinguish it from other materials, as well as a method for obtaining it, conception has not been achieved until reduction to practice has occurred, i.e., until after the gene has been isolated.") (citations omitted). In such instances the alleged conception fails not merely because the field is unpredictable or because of the general uncertainty surrounding experimental sciences, but because the conception is incomplete due to factual uncertainty that undermines the specificity of the inventor' s idea of the invention. *Burroughs Wellcome Co. v. Barr Laboratories Inc.*, 40 F.3d 1223, 1229, 32 USPQ2d 1915, 1920 (Fed. Cir. 1994). Reduction to practice in effect provides the only evidence to corroborate conception (and therefore possession) of the invention. *Id.*

Any claim to a species that does not meet the test described under at least one of (a), (b), or (c) must be rejected as lacking adequate written description under 35 U.S.C. 112, para. 1.

ii) For each claim drawn to a genus:

The written description requirement for a claimed genus may be satisfied through sufficient description of a representative number of species by actual reduction to practice (see i)(A), above), reduction to drawings (see i)(B), above), or by disclosure of relevant, identifying characteristics, i.e., structure or other physical and/or chemical properties, by functional characteristics coupled with a known or disclosed correlation between function and structure, or by a combination of such identifying characteristics, sufficient to show the applicant was in possession of the claimed genus (see i)(C), above). See *Eli Lilly*, 119 F.3d at 1568, 43 USPQ2d at 1406.

A "representative number of species" means that the species which are adequately described are representative of the entire genus. Thus, when there is substantial variation within the genus, one must describe a sufficient variety of species to reflect the variation within the genus. On the other hand, there may be situations where one species adequately supports a genus. See, e.g., *Rasmussen*, 650 F.2d at 1214, 211 USPQ at 326-27 (disclosure of a single method of adheringly applying one layer to another was sufficient to support a generic claim to "adheringly applying" because one skilled in the art reading the specification would understand that it is unimportant how the layers are adhered, so long as they are adhered); *In re Herschler*, 591 F.2d 693, 697, 200 USPQ 711, 714 (CCPA 1979) (disclosure of corticosteroid in DMSO sufficient to support claims drawn to a method of using a mixture of a "physiologically active steroid" and DMSO because "use of known chemical compounds in a manner auxiliary to the invention must have a corresponding written description only so specific as to lead one having ordinary skill in the art to that class of compounds. Occasionally, a functional recitation of those known compounds in the specification may be sufficient as that description."); *In re Smythe*, 480 F.2d 1376, 1383, 178 USPQ 279, 285 (CCPA 1973) (the phrase "air or other gas which is inert to the liquid" was sufficient to support a claim to "inert fluid media" because the description of the properties and functions of the air or other gas segmentizing medium would suggest to a person skilled in the art that appellant's invention includes the use of "inert fluid" broadly.). However, in *Tronzo v. Biomet*, 156 F.3d at 1159, 47 USPQ2d at1833 (Fed. Cir. 1998), the disclosure of a species in the parent application did not suffice to provide written description support for the genus in the child application. What constitutes a "representative number" is an inverse function of the skill and knowledge in the art. Satisfactory disclosure of a "representative

number" depends on whether one of skill in the art would recognize that the applicant was in possession of the necessary common attributes or features of the elements possessed by the members of the genus in view of the species disclosed. For inventions in an unpredictable art, adequate written description of a genus which embraces widely variant species cannot be achieved by disclosing only one species within the genus. See, e.g., *Eli Lilly*. Description of a representative number of species does not require the description to be of such specificity that it would provide individual support for each species that the genus embraces. For example, in the molecular biology arts, if an applicant disclosed an amino acid sequence, it would be unnecessary to provide an explicit disclosure of nucleic acid sequences that encoded the amino acid sequence. Since the genetic code is widely known, a disclosure of an amino acid sequence would provide sufficient information such that one would accept that an applicant was in possession of the full genus of nucleic acids encoding a given amino acid sequence, but not necessarily any particular species. Cf. *In re Bell*, 991 F.2d 781, 785, 26 USPQ2d 1529, 1532 (Fed. Cir. 1993) and *In re Baird*, 16 F.3d 380, 382, 29 USPQ2d 1550, 1552 (Fed. Cir. 1994). If a representative number of adequately described species are not disclosed for a genus, the claim to that genus must be rejected as lacking adequate written description under 35 U.S.C. 112, para. 1.

(b) New Claims, Amended Claims, or Claims Asserting Entitlement to the Benefit of an Earlier Priority Date or Filing Date under 35 U.S.C. 119, 120, or 365(c)

The examiner has the initial burden of presenting evidence or reasoning to explain why persons skilled in the art would not recognize in the original disclosure a description of the invention defined by the claims. See *Wertheim*, 541 F.2d at 263, 191 USPQ at 97 ("[T]he PTO has the initial burden of presenting evidence or reasons why persons skilled in the art would not recognize in the disclosure a description of the invention defined by the claims."). However, when filing an amendment an applicant should show support in the original disclosure for new or amended claims. See MPEP § 714.02 and § 2163.06 ("Applicant should * * * specifically point out the support for any amendments made to the disclosure.").

To comply with the written description requirement of 35 U.S.C. 112, para. 1, or to be entitled to an earlier priority date or filing date under 35 U.S.C. 119, 120, or 365(c), each claim limitation must be expressly, implicitly, or inherently supported in the originally filed disclosure. When an explicit limitation in a claim "is not present in the written description whose benefit is sought it must be shown that a person of ordinary skill would have understood, at the time the patent application was filed, that the description requires that limitation." *Hyatt v. Boone*, 146 F.3d 1348, 1353, 47 USPQ2d 1128, 1131 (Fed. Cir. 1998). See also *In re Wright*, 866 F.2d 422, 425, 9 USPQ2d 1649, 1651 (Fed. Cir. 1989) (Original specification for method of forming images using photosensitive microcapsules which describes removal of microcapsules from surface and warns that capsules not be disturbed prior to formation of image, unequivocally teaches absence of permanently fixed microcapsules and supports amended language of claims requiring that microcapsules be "not permanently fixed" to underlying surface, and therefore meets description requirement of 35 U.S.C. 112.); *In re Robins*, 429 F.2d 452, 456-57, 166 USPQ 552, 555 (CCPA 1970) ("[W]here no explicit description of a generic invention is to be found in the specification * * * mention of representative compounds may provide an implicit description upon which to base generic claim language."); *In re Smith*, 458 F.2d 1389, 1395, 173 USPQ 679, 683 (CCPA 1972) (a subgenus is not necessarily implicitly described by a genus encompassing it and a species upon which it reads); *In re Robertson*, 169 F.3d 743, 745, 49 USPQ2d 1949, 1950-51 (Fed. Cir. 1999) ("To establish inherency, the extrinsic evidence 'must make clear that the missing descriptive matter is necessarily present in the thing described in the reference, and that it would be so recognized by persons of ordinary skill. Inherency, however, may not be established by probabilities or possibilities. The mere fact that a certain thing may result from a given set of circumstances is not sufficient.'") (citations omitted). Furthermore, each claim must include all elements which applicant has described as essential. See, e.g., *Johnson Worldwide Associates Inc. v. Zebco Corp.*, 175 F.3d at 993, 50 USPQ2d at 1613; *Gentry Gallery, Inc. v. Berkline Corp.*, 134 F.3d at 1479, 45 USPQ2d at 1503; *Tronzo v. Biomet*, 156 F.3d at 1159, 47 USPQ2d at 1833.

If the originally filed disclosure does not provide support for each claim limitation, or if an element which applicant describes as essential or critical is not claimed, a new or amended claim must be rejected under 35 U.S.C. 112, para. 1, as lacking adequate written description, or in the case of a claim for priority under 35 U.S.C. 119, 120, or 365(c), the claim for priority must be denied.

III. COMPLETE PATENTABILITY DETERMINATION UNDER ALL STATUTORY REQUIREMENTS AND CLEARLY COMMUNICATE FINDINGS, CONCLUSIONS, AND THEIR BASES

The above only describes how to determine whether the written description requirement of 35 U.S.C. 112, para. 1, is satisfied. Regardless of the outcome of that determination, Office personnel must complete the patentability determination under all the relevant statutory provisions of title 35 of the U.S. Code.

Once Office personnel have concluded analysis of the claimed invention under all the statutory provisions, including 35 U.S.C. 101, 112, 102, and 103, they should review all the proposed rejections and their bases to confirm their correctness. Only then should any rejection be imposed in an Office action. The Office action should clearly communicate the findings, conclusions, and reasons which support them. When possible, the Office action should offer helpful suggestions on how to overcome rejections.

A. For Each Claim Lacking Written Description Support, Reject the Claim Under 35 U.S.C. 112, para. 1, for Lack of Adequate Written Description

A description as filed is presumed to be adequate, unless or until sufficient evidence or reasoning to the contrary has been presented by the examiner to rebut the presumption. See, e.g., *In re Marzocchi*, 439 F.2d 220, 224, 169 USPQ 367, 370 (CCPA 1971). The examiner, therefore, must have a reasonable basis to challenge the adequacy of the written description. The examiner has the initial burden of presenting by a preponderance of evidence why a person skilled in the art would not recognize in an applicant's disclosure a description of the invention defined by the claims. *Wertheim*, 541 F.2d at 263, 191 USPQ at 97. In rejecting a claim, the examiner must set forth express findings of fact regarding the above analysis which support the lack of written description conclusion. These findings should:

(A) Identify the claim limitation at issue; and

(B) Establish a *prima facie* case by providing reasons why a person skilled in the art at the time the application was filed would not have recognized that the inventor was in possession of the invention as claimed in view of the disclosure of the application as filed. A general allegation of "unpredictability in the art" is not a sufficient reason to support a rejection for lack of adequate written description.

When appropriate, suggest amendments to the claims which can be supported by the application's written description, being mindful of the prohibition against the addition of new matter in the claims or description. See *Rasmussen*, 650 F.2d at 1214, 211 USPQ at 326.

B. Upon Reply by Applicant, Again Determine the Patentability of the Claimed Invention, Including Whether the Written Description Requirement Is Satisfied by Reperforming the Analysis Described Above in View of the Whole Record

Upon reply by applicant, before repeating any rejection under 35 U.S.C. 112, para. 1, for lack of written description, review the basis for the rejection in view of the record as a whole, including amendments, arguments, and any evidence submitted by applicant. If the whole record now demonstrates that the written description requirement is satisfied, do not repeat the rejection in the next Office action. If the record still does not demonstrate that the written description is adequate to support the claim(s), repeat the rejection under 35 U.S.C. 112, para. 1, fully respond to applicant's rebuttal arguments, and properly treat any further showings submitted by applicant in the reply. When a rejection is maintained, any affidavits relevant to the 112, para. 1, written description requirement, must be thoroughly analyzed and discussed in the next Office action. See *In re Alton*, 76 F.3d 1168, 1176, 37 USPQ2d 1578, 1584 (Fed. Cir. 1996).

2163.01 Support for the Claimed Subject Matter in Disclosure

A written description requirement issue generally involves the question of whether the subject matter of a claim is supported by [conforms to] the disclosure of an application as filed. If the examiner concludes that the claimed subject matter is not supported [described] in an application as filed, this would result in a rejection of the claim on the ground of a lack of written description under 35 U.S.C. 112, first paragraph or denial of the benefit of the filing date of a previously filed application. The claim should not be rejected or objected to on the ground of new matter. As framed by the court in *In re Rasmussen*, 650 F.2d 1212, 211 USPQ 323 (CCPA 1981), the concept of new matter is properly employed as a basis for objection to amendments to the abstract, specification or drawings attempting to add new disclosure to that originally presented. While the test or analysis of description requirement and new matter issues is the same, the examining procedure and statutory basis for addressing these issues differ. See MPEP § 2163.06.

2163.02 Standard for Determining Compliance With the Written Description Requirement

The courts have described the essential question to be addressed in a description requirement issue in a variety of ways. An objective standard for determining compliance with the written description requirement is, "does the description clearly allow persons of ordinary skill in the art to recognize that he or she invented what is claimed." *In re Gosteli*, 872 F.2d 1008, 1012, 10 USPQ2d 1614, 1618 (Fed. Cir. 1989). Under *Vas-Cath, Inc. v. Mahurkar*, 935 F.2d 1555, 1563-64, 19 USPQ2d 1111, 1117 (Fed. Cir. 1991), to satisfy the written description requirement, an applicant must convey with reasonable clarity to those skilled in the art that, as of the filing date sought, he or she was in possession of the invention, and that the invention, in that context, is whatever is now claimed. The test for sufficiency of support in a parent application is whether the disclosure of the application relied upon "reasonably conveys to the artisan that the inventor had possession at that time of the later claimed subject matter." *Ralston Purina Co. v. Far-Mar-Co., Inc.*, 772 F.2d 1570, 1575, 227 USPQ 177, 179 (Fed. Cir. 1985) (quoting *In re Kaslow*, 707 F.2d 1366, 1375, 217 USPQ 1089, 1096 (Fed. Cir. 1983)).

Whenever the issue arises, the fundamental factual inquiry is whether the specification conveys with reasonable clarity to those skilled in the art that, as of the filing date sought, applicant was in possession of the invention as now claimed. See, e.g., *Vas-Cath, Inc. v. Mahurkar*, 935 F.2d 1555, 1563-64, 19 USPQ2d 1111, 1117 (Fed. Cir. 1991). An applicant shows possession of the claimed invention by describing the claimed invention with all of its limitations using such descriptive means as words, structures, figures, diagrams, and formulas that fully set forth the claimed invention. *Lockwood v. American Airlines, Inc.*, 107 F.3d 1565, 1572, 41 USPQ2d 1961, 1966 (Fed. Cir. 1997). Possession may be shown in a variety of ways including description of an actual reduction to practice, or by showing that the invention was "ready for patenting" such as by the disclosure of drawings or structural chemical formulas that show that the invention was complete, or by describing distinguishing identifying characteristics sufficient to show that the applicant was in possession of the claimed invention. See, e.g., *Pfaff v. Wells Electronics, Inc.*, 525 U.S. 55, 68, 119 S.Ct. 304, 312, 48 USPQ2d 1641, 1647 (1998); *Regents of the University of California v. Eli Lilly*, 119 F.3d 1559, 1568, 43 USPQ2d 1398, 1406 (Fed. Cir. 1997); *Amgen, Inc. v. Chugai Pharmaceutical*, 927 F.2d 1200, 1206, 18 USPQ2d 1016, 1021 (Fed. Cir. 1991) (one must define a compound by "whatever characteristics sufficiently distinguish it").

The subject matter of the claim need not be described literally (i.e., using the same terms or *in haec verba*) in order for the disclosure to satisfy the description requirement. If a claim is amended to include subject matter, limitations, or terminology not present in the application as filed, involving a departure from, addition to, or deletion from the disclosure of the application as filed, the examiner should conclude that the claimed subject matter is not described in that application. This conclusion will result in the rejection of the claims affected under 35 U.S.C.112, first paragraph - description requirement, or denial of the benefit of the filing date of a previously filed application, as appropriate.

See MPEP § 2163 for examination guidelines pertaining to the written description requirement.

2163.03 Typical Circumstances Where Adequate Written Description Issue Arises

A description requirement issue can arise in a number of different circumstances where it must be determined whether the subject matter of a claim is supported in an application as filed. See MPEP § 2163 for examination guidelines pertaining to the written description requirement. While a question as to whether a specification provides an adequate written description may arise in the context of an original claim which is not described sufficiently (see, e.g., *Regents of the University of California v. Eli Lilly*, 119 F.3d 1559, 43 USPQ2d 1398 (Fed. Cir. 1997)), there is a strong presumption that an adequate written description of the claimed invention is present in the specification as filed. *In re Wertheim*, 541 F.2d 257, 262, 191 USPQ 90, 96 (CCPA 1976). Consequently, rejection of an original claim for lack of written description should be rare. Most typically, the issue will arise in the following circumstances:

I. AMENDMENT AFFECTING A CLAIM

An amendment to the claims or the addition of a new claim must be supported by the description of the invention in the application as filed. *In re Wright*, 866 F.2d 422, 9 USPQ2d 1649 (Fed. Cir. 1989). An amendment to the specification (e.g., a change in the definition of a term used both in the specification and claim) may indirectly affect a claim even though no actual amendment is made to the claim.

II. RELIANCE ON FILING DATE OF PARENT APPLICATION UNDER 35 U.S.C. 120

Under 35 U.S.C. 120, the claims in a U.S. application are entitled to the benefit of the filing date of an earlier filed U.S. application if the subject matter of the claim is disclosed in the manner provided by 35 U.S.C. 112, first paragraph in the earlier filed application. See, e.g., *Tronzo v. Biomet, Inc.*, 156 F.3d 1154, 47 USPQ2d 1829 (Fed. Cir. 1998); *In re Scheiber*, 587 F.2d 59, 199 USPQ 782 (CCPA 1978).

III. RELIANCE ON PRIORITY UNDER 35 U.S.C. 119

Under 35 U.S.C. 119 (a) or (e), the claims in a U.S. application are entitled to the benefit of a foreign priority date or the filing date of a provisional application if the corresponding foreign application or provisional application supports the claims in the manner required by 35 U.S.C. 112, first paragraph. *In re Ziegler*, 992 F.2d 1197, 1200, 26 USPQ2d 1600, 1603 (Fed. Cir. 1993); *Kawai v. Metlesics*, 480 F.2d 880, 178 USPQ 158 (CCPA 1973); *In re Gosteli*, 872 F.2d 1008, 10 USPQ2d 1614 (Fed. Cir. 1989).

IV. SUPPORT FOR A CLAIM CORRESPONDING TO A COUNT IN AN INTERFERENCE

In an interference proceeding, the claim corresponding to a count must be supported by the specification in the manner provided by 35 U.S.C. 112, first paragraph. *Fields v. Conover*, 443 F.2d 1386, 170 USPQ 276 (CCPA 1971) (A broad generic disclosure to a class of compounds was not a sufficient written description of a specific compound within the class.). Furthermore, when a party to an interference seeks the benefit of an earlier-filed U.S. patent application, the earlier application must meet the requirements of 35 U.S.C. 112, first paragraph for the subject matter of the count. *Hyatt v. Boone*, 146 F.3d 1348, 1352, 47 USPQ2d 1128, 1130 (Fed. Cir. 1998).

2163.04 Burden on the Examiner with Regard to the Written Description Requirement

The inquiry into whether the description requirement is met must be determined on a case-by-case basis and is a question of fact. *In re Wertheim*, 541 F.2d 257, 262, 191 USPQ 90, 96 (CCPA 1976). A description as filed is presumed to be adequate, unless or until sufficient evidence or reasoning to the contrary has been presented by the examiner to rebut the presumption. See, e.g., *In re Marzocchi*, 439 F.2d 220, 224, 169 USPQ 367, 370 (CCPA 1971). The examiner, therefore, must have a reasonable basis to challenge the adequacy of the written description. The examiner has the initial burden of presenting by a preponderance of evidence why a person skilled in the art would not recognize in an applicant's disclosure a

description of the invention defined by the claims. *Wertheim*, 541 F.2d at 263, 191 USPQ at 97.

I. STATEMENT OF REJECTION REQUIREMENTS

In rejecting a claim, the examiner must set forth express findings of fact which support the lack of written description conclusion (see MPEP § 2163 for examination guidelines pertaining to the written description requirement). These findings should:

(A) Identify the claim limitation at issue; and

(B) Establish a *prima facie* case by providing reasons why a person skilled in the art at the time the application was filed would not have recognized that the inventor was in possession of the invention as claimed in view of the disclosure of the application as filed. A general allegation of "unpredictability in the art" is not a sufficient reason to support a rejection for lack of adequate written description. A simple statement such as "Applicant has not pointed out where the new (or amended) claim is supported, nor does there appear to be a written description of the claim limitation '____' in the application as filed." may be sufficient where the claim is a new or amended claim, the support for the limitation is not apparent, and applicant has not pointed out where the limitation is supported.

When appropriate, suggest amendments to the claims which can be supported by the application's written description, being mindful of the prohibition against the addition of new matter in the claims or description. See *Rasmussen*, 650 F.2d at 1214, 211 USPQ at 326.

II. RESPONSE TO APPLICANT'S REPLY

Upon reply by applicant, before repeating any rejection under 35 U.S.C. 112, para. 1, for lack of written description, review the basis for the rejection in view of the record as a whole, including amendments, arguments, and any evidence submitted by applicant. If the whole record now demonstrates that the written description requirement is satisfied, do not repeat the rejection in the next Office action. If the record still does not demonstrate that the written description is adequate to support the claim(s), repeat the rejection under 35 U.S.C. 112, para. 1, fully respond to applicant' s rebuttal arguments, and properly treat any further showings submitted by applicant in the reply. When a rejection is maintained, any affidavits relevant to the 35 U.S.C. 112, para. 1, written description requirement, must be thoroughly analyzed and discussed in the next Office action. See *In re Alton*, 76 F.3d 1168, 1176, 37 USPQ2d 1578, 1584 (Fed. Cir. 1996).

2163.05 Changes to the Scope of Claims

The failure to meet the written description requirement of 35 U.S.C. 112, first paragraph, commonly arises when the claims are changed after filing to either broaden or narrow the breadth of the claim limitations, or to alter a numerical range limitation or to use claim language which is not synonymous with the terminology used in the original disclosure. To comply with the written description requirement of 35 U.S.C. 112, para. 1, or to be entitled to an earlier priority date or filing date under 35 U.S.C. 119, 120, or 365(c), each claim limitation must be expressly, implicitly, or inherently supported in the originally filed disclosure. See MPEP § 2163 for examination guidelines pertaining to the written description requirement.

I. BROADENING CLAIM

Omission of a Limitation

Under certain circumstances, omission of a limitation can raise an issue regarding whether the inventor had possession of a broader, more generic invention. See, e.g., *Gentry Gallery, Inc. v. Berkline Corp.*, 134 F.3d 1473, 45 USPQ2d 1498 (Fed. Cir. 1998) (claims to a sectional sofa comprising, *inter alia*, a console and a control means were held invalid for failing to satisfy the written description requirement where the claims were broadened by removing the location of the control means.); *Johnson Worldwide Associates v. Zebco Corp.*, 175 F.3d 985, 993, 50 USPQ2d 1607, 1613 (Fed. Cir. 1999) (In *Gentry Gallery*, the "court's determination that the patent disclosure did not support a broad meaning for the disputed claim terms was premised on clear statements in the written description that described the location of a claim element--the 'control means'--as 'the only possible location' and that variations were 'outside the stated purpose of the invention.' *Gentry Gallery*, 134 F.3d at 1479, 45 USPQ2d at

1503. *Gentry Gallery*, then, considers the situation where the patent's disclosure makes crystal clear that a particular (i.e., narrow) understanding of a claim term is an 'essential element of [the inventor's] invention.' "); *Tronzo v. Biomet*, 156 F.3d at 1158-59, 47 USPQ2d at 1833 (Fed. Cir. 1998) (claims to generic cup shape were not entitled to filing date of parent application which disclosed "conical cup" in view of the disclosure of the parent application stating the advantages and importance of the conical shape.); *In re Wilder*, 736 F.2d 1516, 222 USPQ 369 (Fed. Cir. 1984) (reissue claim omitting "in synchronism" limitation with respect to scanning means and indexing means was not supported by the original patent's disclosure in such a way as to indicate possession, as of the original filing date, of that generic invention.).

A claim that omits an element which applicant describes as an essential or critical feature of the invention originally disclosed does not comply with the written description requirement. See *Gentry Gallery*, 134 F.3d at 1480, 45 USPQ2d at 1503; *In re Sus*, 306 F.2d 494, 504, 134 USPQ 301, 309 (CCPA 1962) ("[O]ne skilled in this art would not be taught by the written description of the invention in the specification that any 'aryl or substituted aryl radical' would be suitable for the purposes of the invention but rather that only certain aryl radicals and certain specifically substituted aryl radicals [i.e., aryl azides] would be suitable for such purposes.") (emphasis in original). *Compare In re Peters*, 723 F.2d 891, 221 USPQ 952 (Fed. Cir. 1983) (In a reissue application, a claim to a display device was broadened by removing the limitations directed to the specific tapered shape of the tips without violating the written description requirement. The shape limitation was considered to be unnecessary since the specification, as filed, did not describe the tapered shape as essential or critical to the operation or patentability of the claim.). A claim which omits matter disclosed to be essential to the invention as described in the specification or in other statements of record may also be subject to rejection under 35 U.S.C. 112, para. 1, as not enabling, or under 35 U.S.C. 112, para. 2. See *In re Mayhew*, 527 F.2d 1229, 188 USPQ 356 (CCPA 1976); *In re Venezia*, 530 F.2d 956, 189 USPQ 149 (CCPA 1976); and *In re Collier*, 397 F.2d 1003, 158 USPQ 266 (CCPA 1968). See also MPEP § 2172.01.

Addition of Generic Claim

The written description requirement for a claimed genus may be satisfied through sufficient description of a representative number of species. A "representative number of species" means that the species which are adequately described are representative of the entire genus. Thus, when there is substantial variation within the genus, one must describe a sufficient variety of species to reflect the variation within the genus. On the other hand, there may be situations where one species adequately supports a genus. See, e.g., *In re Rasmussen*, 650 F.2d 1212, 1214, 211 USPQ 323, 326-27 (CCPA 1981) (disclosure of a single method of adheringly applying one layer to another was sufficient to support a generic claim to "adheringly applying" because one skilled in the art reading the specification would understand that it is unimportant how the layers are adhered, so long as they are adhered); *In re Herschler*, 591 F.2d 693, 697, 200 USPQ 711, 714 (CCPA 1979) (disclosure of corticosteriod in DMSO sufficient to support claims drawn to a method of using a mixture of a "physiologically active steroid" and DMSO because "use of known chemical compounds in a manner auxiliary to the invention must have a corresponding written description only so specific as to lead one having ordinary skill in the art to that class of compounds. Occasionally, a functional recitation of those known compounds in the specification may be sufficient as that description."); *In re Smythe*, 480 F.2d 1376, 1383, 178 USPQ 279, 285 (CCPA 1973) (the phrase "air or other gas which is inert to the liquid" was sufficient to support a claim to "inert fluid media" because the description of the properties and functions of the air or other gas segmentizing medium would suggest to a person skilled in the art that appellant's invention includes the use of "inert fluid" broadly.). However, in *Tronzo v. Biomet*, 156 F.3d 1154, 1159, 47 USPQ2d 1829, 1833 (Fed. Cir. 1998), the disclosure of a species in the parent application did not suffice to provide written description support for the genus in the child application. Similarly, see *In re Gosteli*, 872 F.2d 1008, 10 USPQ2d 1614 (Fed. Cir. 1989) (generic and subgeneric claims in the U.S. application were not entitled to the benefit of foreign priority where the foreign application disclosed only two of the species encompassed by the broad generic claim and

the subgeneric Markush claim that encompassed 21 compounds).

II. NARROWING OR SUBGENERIC CLAIM

The introduction of claim changes which involve narrowing the claims by introducing elements or limitations which are not supported by the as-filed disclosure is a violation of the written description requirement of 35 U.S.C. 112, first paragraph. See, e.g., *Fujikawa v. Wattanasin*, 93 F.3d 1559, 1571, 39 USPQ2d 1895, 1905 (Fed. Cir. 1996) (a "laundry list" disclosure of every possible moiety does not constitute a written description of every species in a genus because it would not "reasonably lead" those skilled in the art to any particular species); *In re Ruschig*, 379 F.2d 990, 995, 154 USPQ 118, 123 (CCPA 1967) ("*If* n-propylamine had been used in making the compound instead of n-butylamine, the compound of claim 13 would have resulted. Appellants submit to us, as they did to the board, an imaginary specific example patterned on specific example 6 by which the above butyl compound is made so that we can see what a simple change would have resulted in a specific supporting disclosure being present in the present specification. The trouble is that there is no such disclosure, easy though it is to imagine it.") (emphasis in original). In *Ex parte Ohshiro*, 14 USPQ2d 1750 (Bd. Pat. App. & Inter. 1989), the Board affirmed the rejection under 35 U.S.C. 112, first paragraph, of claims to an internal combustion engine which recited "at least one of said piston and said cylinder (head) having a recessed channel." The Board held that the application which disclosed a cylinder head with a recessed channel and a piston without a recessed channel did not specifically disclose the "species" of a channeled piston.

While these and other cases find that recitation of an undisclosed species may violate the description requirement, a change involving subgeneric terminology may or may not be acceptable. Applicant was not entitled to the benefit of a parent filing date when the claim was directed to a subgenus (a specified range of molecular weight ratios) where the parent application contained a generic disclosure and a specific example that fell within the recited range because the court held that subgenus range was not described in the parent application. *In re Lukach*, 442 F.2d 967, 169 USPQ 795 (CCPA 1971). On the other hand, in *Ex parte Sorenson*, 3 USPQ2d 1462 (Bd. Pat. App. & Inter. 1987), the subgeneric language of "aliphatic carboxylic acid" and "aryl carboxylic acid" did not violate the written description requirement because species falling within each subgenus were disclosed as well as the generic carboxylic acid. See also *In re Smith*, 458 F.2d 1389, 1395, 173 USPQ 679, 683 (CCPA 1972) ("Whatever may be the viability of an inductive-deductive approach to arriving at a claimed subgenus, it <u>cannot</u> be said that such a subgenus is necessarily described by a genus encompassing it and a species upon which it reads." (emphasis added)). Each case must be decided on its own facts in terms of what is reasonably communicated to those skilled in the art. *In re Wilder*, 736 F.2d 1516, 1520, 222 USPQ 369, 372 (Fed. Cir. 1984).

III. RANGE LIMITATIONS

With respect to changing numerical range limitations, the analysis must take into account which ranges one skilled in the art would consider inherently supported by the discussion in the original disclosure. In the decision in *In re Wertheim*, 541 F.2d 257, 191 USPQ 90 (CCPA 1976), the ranges described in the original specification included a range of "25%-60%" and specific examples of "36%" and "50%." A corresponding new claim limitation to "at least 35%" did not meet the description requirement because the phrase "at least" had no upper limit and caused the claim to read literally on embodiments outside the "25% to 60%" range, however a limitation to "between 35% and 60%" did meet the description requirement.

See also *Purdue Pharma L.P. v. Faulding Inc.*, 230 F.3d 1320, 1328, 56 USPQ2d 1481, 1487 (Fed. Cir. 2000) ("the specification does not clearly disclose to the skilled artisan that the inventors * * * considered the [] ratio to be part of their invention * * *. There is therefore no force to Purdue's argument that the written description requirement was satisfied because the disclosure revealed a broad invention from which the [later-filed] claims carved out a patentable portion"). *Compare Union Oil of Cal. v. Atlantic Richfield Co.*, 208 F.3d 989, 997, 54 USPQ2d 1227, 1232-33 (Fed. Cir. 2000) (Description in terms of ranges of chemical properties which work in combination with ranges of other chemical properties to produce an automotive gasoline that reduces emis-

sions was found to provide an adequate written description even though the exact chemical components of each combination were not disclosed and the specification did not disclose any distinct embodiments corresponding to any claim at issue. "[T]he Patent Act and this court's case law require only sufficient description to show one of skill in the . . . art that the inventor possessed the claimed invention at the time of filing.").

2163.06 Relationship of Written Description Requirement to New Matter

Lack of written description is an issue that generally arises with respect to the subject matter of a claim. If an applicant amends or attempts to amend the abstract, specification or drawings of an application, an issue of new matter will arise if the content of the amendment is not described in the application as filed. Stated another way, information contained in any one of the specification, claims or drawings of the application as filed may be added to any other part of the application without introducing new matter.

There are two statutory provisions that prohibit the introduction of new matter: 35 U.S.C. 132 - No amendment shall introduce new matter into the disclosure of the invention; and, similarly providing for a reissue application, 35 U.S.C. 251 - No new matter shall be introduced into the application for reissue.

I. TREATMENT OF NEW MATTER

If new subject matter is added to the disclosure, whether it be in the abstract, the specification, or the drawings, the examiner should object to the introduction of new matter under 35 U.S.C. 132 or 251 as appropriate, and require applicant to cancel the new matter. If new matter is added to the claims, the examiner should reject the claims under 35 U.S.C. 112, first paragraph - written description requirement. *In re Rasmussen*, 650 F.2d 1212, 211 USPQ 323 (CCPA 1981). The examiner should still consider the subject matter added to the claim in making rejections based on prior art since the new matter rejection may be overcome by applicant.

In an instance in which the claims have not been amended, *per se*, but the specification has been amended to add new matter, a rejection of the claims under 35 U.S.C. 112, first paragraph should be made whenever any of the claim limitations are affected by the added material.

When an amendment is filed in reply to an objection or rejection based on 35 U.S.C. 112, first paragraph, a study of the entire application is often necessary to determine whether or not "new matter" is involved. Applicant should therefore specifically point out the support for any amendments made to the disclosure.

II. REVIEW OF NEW MATTER OBJECTIONS AND/OR REJECTIONS

A rejection of claims is reviewable by the Board of Patent Appeals and Interferences, whereas an objection and requirement to delete new matter is subject to supervisory review by petition under 37 CFR 1.181. If both the claims and specification contain new matter either directly or indirectly, and there has been both a rejection and objection by the examiner, the issue becomes appealable and should not be decided by petition.

III. CLAIMED SUBJECT MATTER NOT DISCLOSED IN REMAINDER OF SPECIFICATION

The claims as filed in the original specification are part of the disclosure and therefore, if an application as originally filed contains a claim disclosing material not disclosed in the remainder of the specification, the applicant may amend the specification to include the claimed subject matter. *In re Benno*, 768 F.2d 1340, 226 USPQ 683 (Fed. Cir. 1985). Form Paragraph 7.44 may be used where originally claimed subject matter lacks proper antecedent basis in the specification. See MPEP § 608.01(o).

2163.07 Amendments to Application Which Are Supported in the Original Description

Amendments to an application which are supported in the original description are NOT new matter.

I. REPHRASING

Mere rephrasing of a passage does not constitute new matter. Accordingly, a rewording of a passage where the same meaning remains intact is

permissible. *In re Anderson*, 471 F.2d 1237, 176 USPQ 331 (CCPA 1973). The mere inclusion of dictionary or art recognized definitions known at the time of filing an application would not be considered new matter. If there are multiple definitions for a term and a definition is added to the application, it must be clear from the application as filed that applicant intended a particular definition, in order to avoid an issue of new matter and/or lack of written description. See, e.g., *Schering Corp. v. Amgen, Inc.*, 222 F.3d 1347, 1352-53, 55 USPQ2d 1650, 1654 (Fed. Cir. 2000). In *Schering*, the original disclosure drawn to recombinant DNA molecules utilized the term "leukocyte interferon." Shortly after the filing date, a scientific committee abolished the term in favor of "IFN-(a)," since the latter term more specifically identified a particular polypeptide and since the committee found that leukocytes also produced other types of interferon. The court held that the subsequent amendment to the specification and claims substituting the term "IFN-(a)" for "leukocyte interferon" merely renamed the invention and did not constitute new matter. The claims were limited to cover only the interferon subtype coded for by the inventor's original deposits.

II. OBVIOUS ERRORS

An amendment to correct an obvious error does not constitute new matter where one skilled in the art would not only recognize the existence of error in the specification, but also the appropriate correction. *In re Oda*, 443 F.2d 1200, 170 USPQ 268 (CCPA 1971).

Where a non-English foreign priority document under 35 U.S.C. 119 is of record in the application file, applicant may not rely on the disclosure of that document to support correction of an error in the pending application. *Ex parte Bondiou*, 132 USPQ 356 (Bd. App. 1961). This prohibition applies regardless of the language of the foreign priority documents because a claim for priority is simply a claim for the benefit of an earlier filing date for subject matter that is common to two or more applications, and does not serve to incorporate the content of the priority document in the application in which the claim for priority is made. This prohibition does not apply in a situation where the original application is in a non-English language (37 CFR 1.52(d)), or where the original application explicitly incorporates a non-English language document by reference.

2163.07(a) Inherent Function, Theory, or Advantage

By disclosing in a patent application a device that inherently performs a function or has a property, operates according to a theory or has an advantage, a patent application necessarily discloses that function, theory or advantage, even though it says nothing explicit concerning it. The application may later be amended to recite the function, theory or advantage without introducing prohibited new matter. *In re Reynolds*, 443 F.2d 384, 170 USPQ 94 (CCPA 1971); *In re Smythe*, 480 F. 2d 1376, 178 USPQ 279 (CCPA 1973). "To establish inherency, the extrinsic evidence 'must make clear that the missing descriptive matter is necessarily present in the thing described in the reference, and that it would be so recognized by persons of ordinary skill. Inherency, however, may not be established by probabilities or possibilities. The mere fact that a certain thing may result from a given set of circumstances is not sufficient.'" *In re Robertson*, 169 F.3d 743, 745, 49 USPQ2d 1949, 1950-51 (Fed. Cir. 1999) (citations omitted).

2163.07(b) Incorporation by Reference

Instead of repeating some information contained in another document, an application may attempt to incorporate the content of another document or part thereof by reference to the document in the text of the specification. The information incorporated is as much a part of the application as filed as if the text was repeated in the application, and should be treated as part of the text of the application as filed. Replacing the identified material incorporated by reference with the actual text is not new matter. See MPEP § 608.01(p) for Office policy regarding incorporation by reference.

2164 The Enablement Requirement

The enablement requirement refers to the requirement of 35 U.S.C. 112, first paragraph that the specification describe how to make and how to use the invention. The invention that one skilled in the art must be enabled to make and use is that defined by the claim(s) of the particular application or patent.

The purpose of the requirement that the specification describe the invention in such terms that one skilled in the art can make and use the claimed invention is to ensure that the invention is communicated to the interested public in a meaningful way. The information contained in the disclosure of an application must be sufficient to inform those skilled in the relevant art how to both make and use the claimed invention. Detailed procedures for making and using the invention may not be necessary if the description of the invention itself is sufficient to permit those skilled in the art to make and use the invention. A patent claim is invalid if it is not supported by an enabling disclosure.

The enablement requirement of 35 U.S.C. 112, first paragraph, is separate and distinct from the description requirement. *Vas-Cath, Inc. v. Mahurkar*, 935 F.2d 1555, 1563, 19 USPQ2d 1111, 1116-17 (Fed. Cir. 1991) ("the purpose of the 'written description' requirement is broader than to merely explain how to 'make and use' "). See also MPEP § 2161. Therefore, the fact that an additional limitation to a claim may lack descriptive support in the disclosure as originally filed does not necessarily mean that the limitation is also not enabled. In other words, the statement of a new limitation in and of itself may enable one skilled in the art to make and use the claim containing that limitation even though that limitation may not be described in the original disclosure. Consequently, such limitations must be analyzed for both enablement and description using their separate and distinct criteria.

Furthermore, when the subject matter is not in the specification portion of the application as filed but is in the claims, the limitation in and of itself may enable one skilled in the art to make and use the claim containing the limitation. When claimed subject matter is only presented in the claims and not in the specification portion of the application, the specification should be objected to for lacking the requisite support for the claimed subject matter using Form Paragraph 7.44. See MPEP § 2163.06. This is an objection to the specification only and enablement issues should be treated separately.

2164.01 Test of Enablement

Any analysis of whether a particular claim is supported by the disclosure in an application requires a determination of whether that disclosure, when filed, contained sufficient information regarding the subject matter of the claims as to enable one skilled in the pertinent art to make and use the claimed invention. The standard for determining whether the specification meets the enablement requirement was cast in the Supreme Court decision of *Mineral Separation v. Hyde*, 242 U.S. 261, 270 (1916) which postured the question: is the experimentation needed to practice the invention undue or unreasonable? That standard is still the one to be applied. *In re Wands*, 858 F.2d 731, 737, 8 USPQ2d 1400, 1404 (Fed. Cir. 1988). Accordingly, even though the statute does not use the term "undue experimentation," it has been interpreted to require that the claimed invention be enabled so that any person skilled in the art can make and use the invention without undue experimentation. *In re Wands*, 858 F.2d at 737, 8 USPQ2d at 1404 (Fed. Cir. 1988). See also *United States v. Telectronics, Inc.*, 857 F.2d 778, 785, 8 USPQ2d 1217, 1223 (Fed. Cir. 1988) ("The test of enablement is whether one reasonably skilled in the art could make or use the invention from the disclosures in the patent coupled with information known in the art without undue experimentation."). A patent need not teach, and preferably omits, what is well known in the art. *In re Buchner*, 929 F.2d 660, 661, 18 USPQ2d 1331, 1332 (Fed. Cir. 1991); *Hybritech, Inc. v. Monoclonal Antibodies, Inc.*, 802 F.2d 1367, 1384, 231 USPQ 81, 94 (Fed. Cir. 1986), *cert. denied*, 480 U.S. 947 (1987); and *Lindemann Maschinenfabrik GMBH v. American Hoist & Derrick Co.*, 730 F.2d 1452, 1463, 221 USPQ 481, 489 (Fed. Cir. 1984). Determining enablement is a question of law based on underlying factual findings. *In re Vaeck*, 947 F.2d 488, 495, 20 USPQ2d 1438, 1444 (Fed. Cir. 1991); *Atlas Powder Co. v. E.I. du Pont de Nemours & Co.*, 750 F.2d 1569, 1576, 224 USPQ 409, 413 (Fed. Cir. 1984).

UNDUE EXPERIMENTATION

The fact that experimentation may be complex does not necessarily make it undue, if the art typically engages in such experimentation. *In re Certain Limited-Charge Cell Culture Microcarriers*, 221 USPQ 1165, 1174 (Int'l Trade Comm'n 1983), *aff'd. sub nom., Massachusetts Institute of Technology v. A.B. Fortia*, 774 F.2d 1104, 227 USPQ 428 (Fed. Cir. 1985). See also *In re Wands*, 858 F.2d at 737,

8 USPQ2d at 1404. The test of enablement is not whether any experimentation is necessary, but whether, if experimentation is necessary, it is undue. *In re Angstadt*, 537 F.2d 498, 504, 190 USPQ 214, 219 (CCPA 1976).

2164.01(a) Undue Experimentation Factors

There are many factors to be considered when determining whether there is sufficient evidence to support a determination that a disclosure does not satisfy the enablement requirement and whether any necessary experimentation is "undue." These factors include, but are not limited to:

(A) The breadth of the claims;

(B) The nature of the invention;

(C) The state of the prior art;

(D) The level of one of ordinary skill;

(E) The level of predictability in the art;

(F) The amount of direction provided by the inventor;

(G) The existence of working examples; and

(H) The quantity of experimentation needed to make or use the invention based on the content of the disclosure.

In re Wands, 858 F.2d 731, 737, 8 USPQ2d 1400, 1404 (Fed. Cir. 1988) (reversing the PTO's determination that claims directed to methods for detection of hepatitis B surface antigens did not satisfy the enablement requirement). In *Wands*, the court noted that there was no disagreement as to the facts, but merely a disagreement as to the interpretation of the data and the conclusion to be made from the facts. *In re Wands*, 858 F.2d at 736-40, 8 USPQ2d at 1403-07. The Court held that the specification was enabling with respect to the claims at issue and found that "there was considerable direction and guidance" in the specification; there was "a high level of skill in the art at the time the application was filed;" and "all of the methods needed to practice the invention were well known." 858 F.2d at 740, 8 USPQ2d at 1406. After considering all the factors related to the enablement issue, the court concluded that "it would not require undue experimentation to obtain antibodies needed to practice the claimed invention." *Id.*, 8 USPQ2d at 1407.

It is improper to conclude that a disclosure is not enabling based on an analysis of only one of the above factors while ignoring one or more of the others. The examiner's analysis must consider all the evidence related to each of these factors, and any conclusion of nonenablement must be based on the evidence as a whole. 858 F.2d at 737, 740, 8 USPQ2d at 1404, 1407.

A conclusion of lack of enablement means that, based on the evidence regarding each of the above factors, the specification, at the time the application was filed, would not have taught one skilled in the art how to make and/or use the full scope of the claimed invention without undue experimentation. *In re Wright*, 999 F.2d 1557,1562, 27 USPQ2d 1510, 1513 (Fed. Cir. 1993).

The determination that "undue experimentation" would have been needed to make and use the claimed invention is not a single, simple factual determination. Rather, it is a conclusion reached by weighing all the above noted factual considerations. *In re Wands*, 858 F.2d at 737, 8 USPQ2d at 1404. These factual considerations are discussed more fully in MPEP § 2164.08 (scope or breadth of the claims), § 2164.05(a) (nature of the invention and state of the prior art), § 2164.05(b) (level of one of ordinary skill), § 2164.03 (level of predictability in the art and amount of direction provided by the inventor), § 2164.02 (the existence of working examples) and § 2164.06 (quantity of experimentation needed to make or use the invention based on the content of the disclosure).

2164.01(b) How to Make the Claimed Invention

As long as the specification discloses at least one method for making and using the claimed invention that bears a reasonable correlation to the entire scope of the claim, then the enablement requirement of 35 U.S.C. 112 is satisfied. *In re Fisher*, 427 F.2d 833, 839, 166 USPQ 18, 24 (CCPA 1970). Failure to disclose other methods by which the claimed invention may be made does not render a claim invalid under 35 U.S.C. 112. *Spectra-Physics, Inc. v. Coherent, Inc.*, 827 F.2d 1524, 1533, 3 USPQ2d 1737, 1743 (Fed. Cir.), *cert. denied*, 484 U.S. 954 (1987).

Naturally, for unstable and transitory chemical intermediates, the "how to make" requirement does not require that the applicant teach how to make the claimed product in stable, permanent or isolatable

form. *In re Breslow*, 616 F.2d 516, 521, 205 USPQ 221, 226 (CCPA 1980).

A key issue that can arise when determining whether the specification is enabling is whether the starting materials or apparatus necessary to make the invention are available. In the biotechnical area, this is often true when the product or process requires a particular strain of microorganism and when the microorganism is available only after extensive screening.

The Court in *In re Ghiron*, 442 F.2d 985, 991, 169 USPQ 723, 727 (CCPA 1971), made clear that if the practice of a method requires a particular apparatus, the application must provide a sufficient disclosure of the apparatus if the apparatus is not readily available. The same can be said if certain chemicals are required to make a compound or practice a chemical process. *In re Howarth,* 654 F.2d 103, 105, 210 USPQ 689, 691 (CCPA 1981).

2164.01(c) How to Use the Claimed Invention

If a statement of utility in the specification contains within it a connotation of how to use, and/or the art recognizes that standard modes of administration are known and contemplated, 35 U.S.C. 112 is satisfied. *In re Johnson*, 282 F.2d 370, 373, 127 USPQ 216, 219 (CCPA 1960); *In re Hitchings*, 342 F.2d 80, 87, 144 USPQ 637, 643 (CCPA 1965). See also *In re Brana,* 51 F.2d 1560, 1566, 34 USPQ2d 1437, 1441 (Fed. Cir. 1993).

For example, it is not necessary to specify the dosage or method of use if it is known to one skilled in the art that such information could be obtained without undue experimentation. If one skilled in the art, based on knowledge of compounds having similar physiological or biological activity, would be able to discern an appropriate dosage or method of use without undue experimentation, this would be sufficient to satisfy 35 U.S.C. 112, first paragraph. The applicant need not demonstrate that the invention is completely safe. See also MPEP § 2107.01 and § 2107.03.

When a compound or composition claim is limited by a particular use, enablement of that claim should be evaluated based on that limitation. See *In re Vaeck*, 947 F.2d 488, 495, 20 USPQ2d 1438, 1444 (Fed. Cir. 1991) (claiming a chimeric gene capable of being expressed in any cyanobacterium and thus defining the claimed gene by its use).

In contrast, when a compound or composition claim is not limited by a recited use, any enabled use that would reasonably correlate with the entire scope of that claim is sufficient to preclude a rejection for nonenablement based on how to use. If multiple uses for claimed compounds or compositions are disclosed in the application, then an enablement rejection must include an explanation, sufficiently supported by the evidence, why the specification fails to enable each disclosed use. In other words, if any use is enabled when multiple uses are disclosed, the application is enabling for the claimed invention.

2164.02 Working Example

Compliance with the enablement requirement of 35 U.S.C. 112, first paragraph, does not turn on whether an example is disclosed. An example may be "working" or "prophetic." A working example is based on work actually performed. A prophetic example describes an embodiment of the invention based on predicted results rather than work actually conducted or results actually achieved.

An applicant need not have actually reduced the invention to practice prior to filing. In *Gould v. Quigg*, 822 F.2d 1074, 1078, 3 USPQ 2d 1302, 1304 (Fed. Cir. 1987), as of Gould's filing date, no person had built a light amplifier or measured a population inversion in a gas discharge. The Court held that "The mere fact that something has not previously been done clearly is not, in itself, a sufficient basis for rejecting all applications purporting to disclose how to do it." 822 F.2d at 1078, 3 USPQ2d at 1304 (quoting *In re Chilowsky*, 229 F.2d 457, 461, 108 USPQ 321, 325 (CCPA 1956)).

The specification need not contain an example if the invention is otherwise disclosed in such manner that one skilled in the art will be able to practice it without an undue amount of experimentation. *In re Borkowski*, 422 F.2d 904, 908, 164 USPQ 642, 645 (CCPA 1970).

Lack of a working example, however, is a factor to be considered, especially in a case involving an unpredictable and undeveloped art. But because only an enabling disclosure is required, applicant need not describe all actual embodiments.

NONE OR ONE WORKING EXAMPLE

When considering the factors relating to a determination of non-enablement, if all the other factors point toward enablement, then the absence of working examples will not by itself render the invention non-enabled. In other words, lack of working examples or lack of evidence that the claimed invention works as described should never be the sole reason for rejecting the claimed invention on the grounds of lack of enablement. A single working example in the specification for a claimed invention is enough to preclude a rejection which states that nothing is enabled since at least that embodiment would be enabled. However, a rejection stating that enablement is limited to a particular scope may be appropriate.

The presence of only one working example should never be the sole reason for rejecting claims as being broader than the enabling disclosure, even though it is a factor to be considered along with all the other factors. To make a valid rejection, one must evaluate all the facts and evidence and state why one would not expect to be able to extrapolate that one example across the entire scope of the claims.

CORRELATION: *IN VITRO/IN VIVO*

The issue of "correlation" is related to the issue of the presence or absence of working examples. "Correlation" as used herein refers to the relationship between *in vitro* or *in vivo* animal model assays and a disclosed or a claimed method of use. An *in vitro* or *in vivo* animal model example in the specification, in effect, constitutes a "working example" if that example "correlates" with a disclosed or claimed method invention. If there is no correlation, then the examples do not constitute "working examples." In this regard, the issue of "correlation" is also dependent on the state of the prior art. In other words, if the art is such that a particular model is recognized as correlating to a specific condition, then it should be accepted as correlating unless the examiner has evidence that the model does not correlate. Even with such evidence, the examiner must weigh the evidence for and against correlation and decide whether one skilled in the art would accept the model as reasonably correlating to the condition. *In re Brana*, 51 F.3d 1560, 1566, 34 USPQ2d 1436, 1441 (Fed. Cir. 1995) (reversing the PTO decision based on finding that *in vitro* data did not support *in vivo* applications).

Since the initial burden is on the examiner to give reasons for the lack of enablement, the examiner must also give reasons for a conclusion of lack of correlation for an *in vitro* or *in vivo* animal model example. A rigorous or an invariable exact correlation is not required, as stated in *Cross v. Iizuka*, 753 F.2d 1040, 1050, 224 USPQ 739, 747 (Fed. Cir. 1985):

> [B]ased upon the relevant evidence as a whole, there is a reasonable correlation between the disclosed *in vitro* utility and an *in vivo* activity, and therefore a rigorous correlation is not necessary where the disclosure of pharmacological activity is reasonable based upon the probative evidence. (Citations omitted.)

WORKING EXAMPLES AND A CLAIMED GENUS

For a claimed genus, representative examples together with a statement applicable to the genus as a whole will ordinarily be sufficient if one skilled in the art (in view of level of skill, state of the art and the information in the specification) would expect the claimed genus could be used in that manner without undue experimentation. Proof of enablement will be required for other members of the claimed genus only where adequate reasons are advanced by the examiner to establish that a person skilled in the art could not use the genus as a whole without undue experimentation.

2164.03 Relationship of Predictability of the Art and the Enablement Requirement

The amount of guidance or direction needed to enable the invention is inversely related to the amount of knowledge in the state of the art as well as the predictability in the art. *In re Fisher*, 427 F.2d 833, 839, 166 USPQ 18, 24 (CCPA 1970). The "amount of guidance or direction" refers to that information in the application, as originally filed, that teaches exactly how to make or use the invention. The more that is known in the prior art about the nature of the invention, how to make, and how to use the invention, and the more predictable the art is, the less information needs to be explicitly stated in the specification. In contrast, if little is known in the prior art about the nature of the invention and the art is unpredictable, the specification would need more detail as to how to make and use the invention in order to be enabling.

The "predictability or lack thereof" in the art refers to the ability of one skilled in the art to extrapolate the disclosed or known results to the claimed invention. If one skilled in the art can readily anticipate the effect of a change within the subject matter to which the claimed invention pertains, then there is predictability in the art. On the other hand, if one skilled in the art cannot readily anticipate the effect of a change within the subject matter to which that claimed invention pertains, then there is lack of predictability in the art. Accordingly, what is known in the art provides evidence as to the question of predictability. In particular, the court in *In re Marzocchi*, 439 F.2d 220, 223-24, 169 USPQ 367, 369-70 (CCPA 1971), stated:

> [I]n the field of chemistry generally, there may be times when the well-known unpredictability of chemical reactions will alone be enough to create a reasonable doubt as to the accuracy of a particular broad statement put forward as enabling support for a claim. This will especially be the case where the statement is, on its face, contrary to generally accepted scientific principles. Most often, additional factors, such as the teachings in pertinent references, will be available to substantiate any doubts that the asserted scope of objective enablement is in fact commensurate with the scope of protection sought and to support any demands based thereon for proof. [Footnote omitted.]

The scope of the required enablement varies inversely with the degree of predictability involved, but even in unpredictable arts, a disclosure of every operable species is not required. A single embodiment may provide broad enablement in cases involving predictable factors, such as mechanical or electrical elements. *In re Vickers*, 141 F.2d 522, 526-27, 61 USPQ 122, 127 (CCPA 1944); *In re Cook*, 439 F.2d 730, 734, 169 USPQ 298, 301 (CCPA 1971). However, in applications directed to inventions in arts where the results are unpredictable, the disclosure of a single species usually does not provide an adequate basis to support generic claims. *In re Soll*, 97 F.2d 623, 624, 38 USPQ 189, 191 (CCPA 1938). In cases involving unpredictable factors, such as most chemical reactions and physiological activity, more may be required. *In re Fisher*, 427 F.2d 833, 839, 166 USPQ 18, 24 (CCPA 1970) (contrasting mechanical and electrical elements with chemical reactions and physiological activity). See also *In re Wright*, 999 F.2d 1557, 1562, 27 USPQ2d 1510, 1513 (Fed. Cir. 1993); *In re Vaeck*, 947 F.2d 488, 496, 20 USPQ2d 1438, 1445 (Fed. Cir. 1991). This is because it is not obvious from the disclosure of one species, what other species will work.

2164.04 Burden on the Examiner Under he Enablement Requirement

Before any analysis of enablement can occur, it is necessary for the examiner to construe the claims. For terms that are not well-known in the art, or for terms that could have more than one meaning, it is necessary that the examiner select the definition that he/she intends to use when examining the application, based on his/her understanding of what applicant intends it to mean, and explicitly set forth the meaning of the term and the scope of the claim when writing an Office action. See *Genentech v. Wellcome Foundation*, 29 F.3d 1555, 1563-64, 31 USPQ2d 1161, 1167-68 (Fed. Cir. 1994).

In order to make a rejection, the examiner has the initial burden to establish a reasonable basis to question the enablement provided for the claimed invention. *In re Wright*, 999 F.2d 1557, 1562, 27 USPQ2d 1510, 1513 (Fed. Cir. 1993) (examiner must provide a reasonable explanation as to why the scope of protection provided by a claim is not adequately enabled by the disclosure). A specification disclosure which contains a teaching of the manner and process of making and using an invention in terms which correspond in scope to those used in describing and defining the subject matter sought to be patented must be taken as being in compliance with the enablement requirement of 35 U.S.C. 112, first paragraph, unless there is a reason to doubt the objective truth of the statements contained therein which must be relied on for enabling support. Assuming that sufficient reason for such doubt exists, a rejection for failure to teach how to make and/or use will be proper on that basis. *In re Marzocchi*, 439 F.2d 220, 224, 169 USPQ 367, 370 (CCPA 1971). As stated by the court, "it is incumbent upon the Patent Office, whenever a rejection on this basis is made, to explain *why* it doubts the truth or accuracy of any statement in a supporting disclosure and to back up assertions of its own with acceptable evidence or reasoning which is inconsistent with the contested statement. Otherwise, there would be no need for the applicant to go to the trouble and expense of supporting his presumptively accurate disclosure." 439 F.2d at 224, 169 USPQ at 370.

According to *In re Bowen*, 492 F.2d 859, 862-63, 181 USPQ 48, 51 (CCPA 1974), the minimal requirement is for the examiner to give reasons for the uncertainty of the enablement. This standard is applicable even when there is no evidence in the record of operability without undue experimentation beyond the disclosed embodiments. See also *In re Brana*, 51 F.3d 1560, 1566, 34 USPQ2d 1436, 1441 (Fed. Cir. 1995) (citing *In re Bundy*, 642 F.2d 430, 433, 209 USPQ 48, 51 (CCPA 1981)) (discussed in MPEP § 2164.07 regarding the relationship of the enablement requirement to the utility requirement of 35 U.S.C. 101).

While the analysis and conclusion of a lack of enablement are based on the factors discussed in MPEP § 2164.01(a) and the evidence as a whole, it is not necessary to discuss each factor in the written enablement rejection. The language should focus on those factors, reasons, and evidence that lead the examiner to conclude that the specification fails to teach how to make and use the claimed invention without undue experimentation, or that the scope of any enablement provided to one skilled in the art is not commensurate with the scope of protection sought by the claims. This can be done by making specific findings of fact, supported by the evidence, and then drawing conclusions based on these findings of fact. For example, doubt may arise about enablement because information is missing about one or more essential parts or relationships between parts which one skilled in the art could not develop without undue experimentation. In such a case, the examiner should specifically identify what information is missing and why one skilled in the art could not supply the information without undue experimentation. See MPEP § 2164.06(a). References should be supplied if possible to support a *prima facie* case of lack of enablement, but are not always required. *In re Marzocchi*, 439 F.2d 220, 224, 169 USPQ 367, 370 (CCPA 1971). However, specific technical reasons are always required.

In accordance with the principles of compact prosecution, if an enablement rejection is appropriate, the first Office action on the merits should present the best case with all the relevant reasons, issues, and evidence so that all such rejections can be withdrawn if applicant provides appropriate convincing arguments and/or evidence in rebuttal. Providing the best case in the first Office action will also allow the second Office action to be made final should applicant fail to provide appropriate convincing arguments and/or evidence. Citing new references and/or expanding arguments in a second Office action could prevent that Office action from being made final. The principles of compact prosecution also dictate that if an enablement rejection is appropriate and the examiner recognizes limitations that would render the claims enabled, the examiner should note such limitations to applicant as early in the prosecution as possible.

In other words, the examiner should always look for enabled, allowable subject matter and communicate to applicant what that subject matter is at the earliest point possible in the prosecution of the application.

2164.05 Determination of Enablement Based on Evidence as a Whole

Once the examiner has weighed all the evidence and established a reasonable basis to question the enablement provided for the claimed invention, the burden falls on applicant to present persuasive arguments, supported by suitable proofs where necessary, that one skilled in the art would be able to make and use the claimed invention using the application as a guide. *In re Brandstadter*, 484 F.2d 1395, 1406-07, 179 USPQ 286, 294 (CCPA 1973). The evidence provided by applicant need not be conclusive but merely convincing to one skilled in the art.

Applicant may submit factual affidavits under 37 CFR 1.132 or cite references to show what one skilled in the art knew at the time of filing the application. A declaration or affidavit is, itself, evidence that must be considered. The weight to give a declaration or affidavit will depend upon the amount of factual evidence the declaration or affidavit contains to support the conclusion of enablement. *In re Buchner*, 929 F.2d 660, 661, 18 USPQ2d 1331, 1332 (Fed. Cir. 1991) ("expert's opinion on the ultimate legal conclusion must be supported by something more than a conclusory statement"); *cf. In re Alton*, 76 F.3d 1168, 1174, 37 USPQ2d 1578, 1583 (Fed. Cir. 1996) (declarations relating to the written description requirement should have been considered).

Applicant should be encouraged to provide any evidence to demonstrate that the disclosure enables the claimed invention. In chemical and biotechnical applications, evidence actually submitted to the FDA

to obtain approval for clinical trials may be submitted. However, considerations made by the FDA for approving clinical trials are different from those made by the PTO in determining whether a claim is enabled. See *Scott v. Finney*, 34 F.3d 1058, 1063, 32 USPQ2d 1115, 1120 (Fed. Cir. 1994) ("Testing for full safety and effectiveness of a prosthetic device is more properly left to the [FDA]."). Once that evidence is submitted, it must be weighed with all other evidence according to the standards set forth above so as to reach a determination as to whether the disclosure enables the claimed invention.

To overcome a *prima facie* case of lack of enablement, applicant must demonstrate by argument and/or evidence that the disclosure, as filed, would have enabled the claimed invention for one skilled in the art at the time of filing. This does not preclude applicant from providing a declaration after the filing date which demonstrates that the claimed invention works. However, the examiner should carefully compare the steps, materials, and conditions used in the experiments of the declaration with those disclosed in the application to make sure that they are commensurate in scope; i.e., that the experiments used the guidance in the specification as filed and what was well known to one of skill in the art. Such a showing also must be commensurate with the scope of the claimed invention, i.e., must bear a reasonable correlation to the scope of the claimed invention.

The examiner must then weigh all the evidence before him or her, including the specification and any new evidence supplied by applicant with the evidence and/or sound scientific reasoning previously presented in the rejection and decide whether the claimed invention is enabled. The examiner should **never** make the determination based on personal opinion. The determination should always be based on the weight of all the evidence.

2164.05(a) Specification Must Be Enabling as of the Filing Date

Whether the specification would have been enabling as of the filing date involves consideration of the nature of the invention, the state of the prior art, and the level of skill in the art. The initial inquiry is into the nature of the invention, i.e., the subject matter to which the claimed invention pertains. The nature of the invention becomes the backdrop to determine the state of the art and the level of skill possessed by one skilled in the art.

The state of the prior art is what one skilled in the art would have known, at the time the application was filed, about the subject matter to which the claimed invention pertains. The relative skill of those in the art refers to the skill of those in the art in relation to the subject matter to which the claimed invention pertains at the time the application was filed. See MPEP § 2164.05(b).

The state of the prior art provides evidence for the degree of predictability in the art and is related to the amount of direction or guidance needed in the specification as filed to meet the enablement requirement. The state of the prior art is also related to the need for working examples in the specification.

The state of the art for a given technology is not static in time. It is entirely possible that a disclosure filed on January 2, 1990, would not have been enabled. However, if the same disclosure had been filed on January 2, 1996, it might have enabled the claims. Therefore, the state of the prior art must be evaluated for each application based on its filing date.

35 U.S.C. 112 requires the specification to be enabling only to a person "skilled in the art to which it pertains, or with which it is most nearly connected." In general, the pertinent art should be defined in terms of the problem to be solved rather than in terms of the technology area, industry, trade, etc. for which the invention is used.

The specification need not disclose what is well-known to those skilled in the art and preferably omits that which is well-known to those skilled and already available to the public. *In re Buchner*, 929 F.2d 660, 661, 18 USPQ2d 1331, 1332 (Fed. Cir. 1991); *Hybritech, Inc. v. Monoclonal Antibodies, Inc.*, 802 F.2d 1367, 1384, 231 USPQ 81, 94 (Fed. Cir. 1986), *cert. denied*, 480 U.S. 947 (1987); and *Lindemann Maschinenfabrik GMBH v. American Hoist & Derrick Co.*, 730 F.2d 1452, 1463, 221 USPQ 481, 489 (Fed. Cir. 1984).

The state of the art existing at the filing date of the application is used to determine whether a particular disclosure is enabling as of the filing date. Publications dated after the filing date providing information publicly first disclosed after the filing date generally cannot be used to show what was known at the time of filing. *In re Gunn*, 537 F.2d 1123, 1128, 190 USPQ

402,405-06 (CCPA 1976); *In re Budnick*, 537 F.2d 535, 538, 190 USPQ 422, 424 (CCPA 1976) (In general, if an applicant seeks to use a patent to prove the state of the art for the purpose of the enablement requirement, the patent must have an issue date earlier than the effective filing date of the application.). While a later dated publication cannot supplement an insufficient disclosure in a prior dated application to make it enabling, applicant can offer the testimony of an expert based on the publication as evidence of the level of skill in the art at the time the application was filed. *Gould v. Quigg*, 822 F.2d 1074, 1077, 3 USPQ2d 1302, 1304 (Fed. Cir. 1987).

In general, the examiner should not use post-filing date references to demonstrate that the patent is nonenabling. Exceptions to this rule could occur if a later-dated reference provides evidence of what one skilled in the art would have known on or before the effective filing date of the patent application. *In re Hogan*, 559 F.2d 595, 605, 194 USPQ 527, 537 (CCPA 1977). If individuals of skill in the art state that a particular invention is not possible years after the filing date, that would be evidence that the disclosed invention was not possible at the time of filing and should be considered. In *In re Wright*, 999 F.2d 1557, 1562, 27 USPQ2d 1510, 1513-14 (Fed. Cir. 1993) an article published 5 years after the filing date of the application adequately supported the examiner's position that the physiological activity of certain viruses was sufficiently unpredictable so that a person skilled in the art would not have believed that the success with one virus and one animal could be extrapolated successfully to all viruses with all living organisms. Claims not directed to the specific virus and the specific animal were held nonenabled.

2164.05(b) Specification Must Be Enabling to Persons Skilled in the Art

The relative skill of those in the art refers to the skill of those in the art in relation to the subject matter to which the claimed invention pertains at the time the application was filed. Where different arts are involved in the invention, the specification is enabling if it enables persons skilled in each art to carry out the aspect of the invention applicable to their specialty. *In re Naquin*, 398 F.2d 863, 866, 158 USPQ 317, 319 (CCPA 1968).

When an invention, in its different aspects, involves distinct arts, the specification is enabling if it enables those skilled in each art, to carry out the aspect proper to their specialty. "If two distinct technologies are relevant to an invention, then the disclosure will be adequate if a person of ordinary skill in each of the two technologies could practice the invention from the disclosures." *Technicon Instruments Corp. v. Alpkem Corp.*, 664 F. Supp. 1558, 1578, 2 USPQ2d 1729, 1742 (D. Ore. 1986), aff'd in part, vacated in part, rev'd in part, 837 F. 2d 1097 (Fed. Cir. 1987) (unpublished opinion), appeal after remand, 866 F. 2d 417, 9 USPQ 2d 1540 (Fed. Cir. 1989). In *Ex parte Zechnall*, 194 USPQ 461 (Bd. App. 1973), the Board stated "appellants' disclosure must be held sufficient if it would enable a person skilled in the electronic computer art, in cooperation with a person skilled in the fuel injection art, to make and use appellants' invention." 194 USPQ at 461.

2164.06 Quantity of Experimentation

The quantity of experimentation needed to be performed by one skilled in the art is only one factor involved in determining whether "undue experimentation" is required to make and use the invention. "[A]n extended period of experimentation may not be undue if the skilled artisan is given sufficient direction or guidance." *In re Colianni*, 561 F.2d 220, 224, 195 USPQ 150, 153 (CCPA 1977). " 'The test is not merely quantitative, since a considerable amount of experimentation is permissible, if it is merely routine, or if the specification in question provides a reasonable amount of guidance with respect to the direction in which the experimentation should proceed.' " *In re Wands*, 858 F.2d 731, 737, 8 USPQ2d 1400, 1404 (Fed. Cir. 1988) (citing *In re Angstadt*, 537 F.2d 489, 502-04, 190 USPQ 214, 217-19 (CCPA 1976)). Time and expense are merely factors in this consideration and are not the controlling factors. *United States v. Telectronics Inc.*, 857 F.2d 778, 785, 8 USPQ2d 1217, 1223 (Fed. Cir. 1988), *cert. denied*, 490 U.S. 1046 (1989).

In the chemical arts, the guidance and ease in carrying out an assay to achieve the claimed objectives may be an issue to be considered in determining the quantity of experimentation needed. For example, if a very difficult and time consuming assay is needed to identify a compound within the scope of a claim, then

this great quantity of experimentation should be considered in the overall analysis. Time and difficulty of experiments are not determinative if they are merely routine. Quantity of examples is only one factor that must be considered before reaching the final conclusion that undue experimentation would be required. *In re Wands*, 858 F.2d at 737, 8 USPQ2d at 1404.

I. EXAMPLE OF REASONABLE EXPERIMENTATION

In *United States v. Telectronics, Inc.*, 857 F.2d 778, 8 USPQ2d 1217 (Fed. Cir. 1988), *cert. denied*, 490 U.S. 1046 (1989), the court reversed the findings of the district court for lack of clear and convincing proof that undue experimentation was needed. The court ruled that since one embodiment (stainless steel electrodes) and the method to determine dose/response was set forth in the specification, the specification was enabling. The question of time and expense of such studies, approximately $50,000 and 6-12 months standing alone, failed to show undue experimentation.

II. EXAMPLE OF UNREASONABLE EXPERIMENTATION

In *In re Ghiron*, 442 F.2d 985, 991-92, 169 USPQ 723, 727-28 (CCPA 1971), functional "block diagrams" were insufficient to enable a person skilled in the art to practice the claimed invention with only a reasonable degree of experimentation because the claimed invention required a "modification to prior art overlap computers," and because "many of the components which appellants illustrate as rectangles in their drawing necessarily are themselves complex assemblages . . . . It is common knowledge that many months or years elapse from the announcement of a new computer by a manufacturer before the first prototype is available. This does not bespeak of a routine operation but of extensive experimentation and development work . . . ."

2164.06(a) Examples of Enablemen Issues-Missing Information

It is common that doubt arises about enablement because information is missing about one or more essential parts or relationships between parts which one skilled in the art could not develop without undue experimentation. In such a case, the examiner should specifically identify what information is missing and why the missing information is needed to provide enablement.

I. ELECTRICAL AND MECHANICAL DEVICES OR PROCESSES

For example, a disclosure of an electrical circuit apparatus, depicted in the drawings by block diagrams with functional labels, was held to be nonenabling in *In re Gunn*, 537 F.2d 1123, 1129, 190 USPQ 402, 406 (CCPA 1976). There was no indication in the specification as to whether the parts represented by boxes were "off the shelf" or must be specifically constructed or modified for applicant's system. Also there were no details in the specification of how the parts should be interconnected, timed and controlled so as to obtain the specific operations desired by the applicant. In *In re Donohue*, 550 F.2d 1269, 193 USPQ 136 (CCPA 1977), the lack of enablement was caused by lack of information in the specification about a single block labelled "LOGIC" in the drawings. See also *Union Pacific Resources Co. v. Chesapeake Energy Corp.*, 236 F.3d 684, 57 USPQ2d 1293 (Fed. Cir. 2001) (Claims directed to a method of determining the location of a horizontal borehole in the earth failed to comply with enablement requirement of 35 U.S.C. 112 because certain computer programming details used to perform claimed method were not disclosed in the specification, and the record showed that a person of skill in art would not understand how to "compare" or "rescale" data as recited in the claims in order to perform the claimed method.).

In re Ghiron, 442 F.2d 985, 169 USPQ 723 (CCPA 1971), involved a method of facilitating transfers from one subset of program instructions to another which required modification of prior art "overlap mode" computers. The Board rejected the claims on the basis, *inter alia*, that the disclosure was insufficient to satisfy the requirements of 35 U.S.C. 112, first paragraph and was affirmed. The Board focused on the fact that the drawings were "block diagrams, i.e., a group of rectangles representing the elements of the system, functionally labelled and interconnected by lines." 442 F.2d at 991, 169 USPQ at 727. The specification did not particularly identify each of the elements represented by the blocks or the relationship therebetween, nor did it specify particular apparatus

intended to carry out each function. The Board further questioned whether the selection and assembly of the required components could be carried out routinely by persons of ordinary skill in the art.

An adequate disclosure of a device may require details of how complex components are constructed and perform the desired function. The claim before the court in *In re Scarbrough*, 500 F.2d 560, 182 USPQ 298 (CCPA 1974) was directed to a system which comprised several component parts (e.g., computer, timing and control mechanism, A/D converter, etc.) only by generic name and overall ultimate function. The court concluded that there was not an enabling disclosure because the specification did not describe how "complex elements known to perform broadly recited functions in different systems would be adaptable for use in Appellant's particular system with only a reasonable amount of experimentation" and that "an unreasonable amount of work would be required to arrive at the detailed relationships appellant says that he has solved." 500 F.2d at 566, 182 USPQ at 302.

II. MICROORGANISMS

Patent applications involving living biological products, such as microorganisms, as critical elements in the process of making the invention, present a unique question with regard to availability. The issue was raised in a case involving claims drawn to a fermentative method of producing two novel antibiotics using a specific microorganism and claims to the novel antibiotics so produced. *In re Argoudelis*, 434 F.2d 1390, 168 USPQ 99 (CCPA 1970). As stated by the court, "a unique aspect of using microorganisms as starting materials is that a sufficient description of how to obtain the microorganism from nature cannot be given." 434 F.2d at 1392, 168 USPQ at 102. It was determined by the court that availability of the biological product via a public depository provided an acceptable means of meeting the written description and the enablement requirements of 35 U.S.C. 112, first paragraph.

To satisfy the enablement requirement a deposit must be made "prior to issue" but need not be made prior to filing the application. *In re Lundak*, 773 F.2d 1216, 1223, 227 USPQ 90, 95 (Fed. Cir. 1985).

The availability requirement of enablement must also be considered in light of the scope or breadth of the claim limitations. The Board of Appeals considered this issue in an application which claimed a fermentative method using microorganisms belonging to a species. Applicants had identified three novel individual strains of microorganisms that were related in such a way as to establish a new species of microorganism, a species being a broader classification than a strain. The three specific strains had been appropriately deposited. The issue focused on whether the specification enabled one skilled in the art to make any member of the species other than the three strains which had been deposited. The Board concluded that the verbal description of the species was inadequate to allow a skilled artisan to make any and all members of the claimed species. *Ex parte Jackson*, 217 USPQ 804, 806 (Bd. App. 1982).

See MPEP § 2402 - § 2411.03 for a detailed discussion of the deposit rules. See MPEP § 2411.01 for rejections under 35 U.S.C. 112 based on deposit issues.

III. DRUG CASES

See MPEP § 2107 - § 2107.03 for a discussion of the utility requirement under 35 U.S.C. 112, first paragraph, in drug cases.

2164.06(b) Examples of Enablement Issues - Chemical Cases

The following summaries should not be relied on to support a case of lack of enablement without carefully reading the case.

SEVERAL DECISIONS RULING THAT THE DISCLOSURE WAS NONENABLING

(A) In *Enzo Biochem, Inc. v. Calgene, Inc.*, 188 F.3d 1362, 52 USPQ2d 1129 (Fed. Cir. 1999), the court held that claims in two patents directed to genetic antisense technology (which aims to control gene expression in a particular organism), were invalid because the breadth of enablement was not commensurate in scope with the claims. Both specifications disclosed applying antisense technology in regulating three genes in *E. coli*. Despite the limited disclosures, the specifications asserted that the "[t]he practices of this invention are generally applicable with respect to any organism containing genetic material which is capable of being expressed ... such as

bacteria, yeast, and other cellular organisms." The claims of the patents encompassed application of antisense methodology in a broad range of organisms. Ultimately, the court relied on the fact that (1) the amount of direction presented and the number of working examples provided in the specification were very narrow compared to the wide breadth of the claims at issue, (2) antisense gene technology was highly unpredictable, and (3) the amount of experimentation required to adapt the practice of creating antisense DNA from *E. coli* to other types of cells was quite high, especially in light of the record, which included notable examples of the inventor's own failures to control the expression of other genes in *E. coli* and other types of cells. Thus, the teachings set forth in the specification provided no more than a "plan" or "invitation" for those of skill in the art to experiment using the technology in other types of cells.

(B) In *In re Wright*, 999 F.2d 1557, 27 USPQ2d 1510 (Fed. Cir. 1993), the 1983 application disclosed a vaccine against the RNA tumor virus known as Prague Avian Sarcoma Virus, a member of the Rous Associated Virus family. Using functional language, Wright claimed a vaccine "comprising an immunologically effective amount" of a viral expression product. *Id.*, at 1559, 27 USPQ2d at 1511. Rejected claims covered all RNA viruses as well as avian RNA viruses. The examiner provided a teaching that in 1988, a vaccine for another retrovirus (i.e., AIDS) remained an intractable problem. This evidence, along with evidence that the RNA viruses were a diverse and complicated genus, convinced the Federal Circuit that the invention was not enabled for either all retroviruses or even for avian retroviruses.

(C) In *In re Goodman*, 11 F.3d 1046, 29 USPQ2d 2010 (Fed. Cir. 1993), a 1985 application functionally claimed a method of producing protein in plant cells by expressing a foreign gene. The court stated: "[n]aturally, the specification must teach those of skill in the art 'how to make and use the invention as broadly as it is claimed.' " *Id.* at 1050, 29 USPQ2d at 2013. Although protein expression in dicotyledonous plant cells was enabled, the claims covered any plant cell. The examiner provided evidence that even as late as 1987, use of the claimed method in monocot plant cells was not enabled. *Id.* at 1051, 29 USPQ2d at 2014.

(D) In *In re Vaeck*, 947 F.2d 488, 495, 20 USPQ2d 1438, 1444 (Fed. Cir. 1991), the court found that several claims were not supported by an enabling disclosure "[t]aking into account the relatively incomplete understanding of the biology of cyanobacteria as of appellants' filing date, as well as the limited disclosure by appellants of the particular cyanobacterial genera operative in the claimed invention...." The claims at issue were not limited to any particular genus or species of cyanobacteria and the specification mentioned nine genera and the working examples employed one species of cyanobacteria.

(E) In *In re Colianni*, 561 F.2d 220, 222-23, 195 USPQ 150, 152 (CCPA 1977), the court affirmed a rejection under 35 U.S.C. 112, first paragraph, because the specification, which was directed to a method of mending a fractured bone by applying "sufficient" ultrasonic energy to the bone, did not define a "sufficient" dosage or teach one of ordinary skill how to select the appropriate intensity, frequency, or duration of the ultrasonic energy.

SEVERAL DECISIONS RULING THAT THE DISCLOSURE WAS ENABLING

(A) In *PPG Ind. v. Guardian Ind.*, 75 F.3d 1558, 1564, 37 USPQ2d 1618, 1623 (Fed. Cir. 1996), the court ruled that even though there was a software error in calculating the ultraviolet transmittance data for examples in the specification making it appear that the production of a cerium oxide-free glass that satisfied the transmittance limitation would be difficult, the specification indicated that such glass could be made. The specification was found to indicate how to minimize the cerium content while maintaining low ultraviolet transmittance.

(B) In *In re Wands*, 858 F.2d 731, 8 USPQ2d 1400 (Fed. Cir. 1988), the court reversed the rejection for lack of enablement under 35 U.S.C. 112, first paragraph, concluding that undue experimentation would not be required to practice the invention. The nature of monoclonal antibody technology is such that experiments first involve the entire attempt to make monoclonal hybridomas to determine which ones secrete antibody with the desired characteristics. The court found that the specification provided considerable direction and guidance on how to practice the claimed invention and presented working examples, that all of the methods needed to practice

the invention were well known, and that there was a high level of skill in the art at the time the application was filed. Furthermore, the applicant carried out the entire procedure for making a monoclonal antibody against HBsAg three times and each time was successful in producing at least one antibody which fell within the scope of the claims.

(C) In *In re Bundy*, 642 F.2d 430, 434, 209 USPQ 48, 51-52 (CCPA 1981), the court ruled that appellant's disclosure was sufficient to enable one skilled in the art to use the claimed analogs of naturally occurring prostaglandins even though the specification lacked any examples of specific dosages, because the specification taught that the novel prostaglandins had certain pharmacological properties and possessed activity similar to known E-type prostaglandins.

2164.07 Relationship of Enablement Requirement to Utility Requirement of 35 U.S.C. 101

The requirement of 35 U.S.C. 112, first paragraph as to how to use the invention is different from the utility requirement of 35 U.S.C. 101. The requirement of 35 U.S.C. 101 is that some specific, substantial, and credible use be set forth for the invention. On the other hand, 35 U.S.C. 112, first paragraph requires an indication of how the use (required by 35 U.S.C. 101) can be carried out, i.e., how the invention can be used.

If an applicant has disclosed a specific and substantial utility for an invention and provided a credible basis supporting that utility, that fact alone does not provide a basis for concluding that the claims comply with all the requirements of 35 U.S.C. 112, first paragraph. For example, if an applicant has claimed a process of treating a certain disease condition with a certain compound and provided a credible basis for asserting that the compound is useful in that regard, but to actually practice the invention as claimed a person skilled in the relevant art would have to engage in an undue amount of experimentation, the claim may be defective under 35 U.S.C. 112, but not 35 U.S.C. 101. To avoid confusion during examination, any rejection under 35 U.S.C. 112, first paragraph, based on grounds other than "lack of utility" should be imposed separately from any rejection imposed due to "lack of utility" under 35 U.S.C. 101 and 35 U.S.C. 112, first paragraph.

I. WHEN UTILITY REQUIREMENT IS NOT SATISFIED

A. *Not Useful or Operative*

If a claim fails to meet the utility requirement of 35 U.S.C. 101 because it is shown to be nonuseful or inoperative, then it necessarily fails to meet the how-to-use aspect of the enablement requirement of 35 U.S.C. 112, first paragraph. As noted in *In re Fouche*, 439 F.2d 1237, 169 USPQ 429 (CCPA 1971), if "compositions are in fact useless, appellant's specification cannot have taught how to use them." 439 F.2d at 1243, 169 USPQ at 434. The examiner should make both rejections (i.e., a rejection under 35 U.S.C. 112, first paragraph and a rejection under 35 U.S.C. 101) where the subject matter of a claim has been shown to be nonuseful or inoperative.

The 35 U.S.C. 112, first paragraph, rejection should indicate that because the invention as claimed does not have utility, a person skilled in the art would not be able to use the invention as claimed, and as such, the claim is defective under 35 U.S.C. 112, first paragraph. A 35 U.S.C. 112, first paragraph, rejection should not be imposed or maintained unless an appropriate basis exists for imposing a rejection under 35 U.S.C. 101. In other words, Office personnel should not impose a 35 U.S.C. 112, first paragraph, rejection grounded on a "lack of utility" basis unless a 35 U.S.C. 101 rejection is proper. In particular, the factual showing needed to impose a rejection under 35 U.S.C. 101 must be provided if a 35 U.S.C. 112, first paragraph, rejection is to be imposed on "lack of utility" grounds. See MPEP § 2107 - § 2107.03 for a more detailed discussion of the utility requirements of 35 U.S.C. 101 and 112, first paragraph.

B. *Burden on the Examiner*

When the examiner concludes that an application is describing an invention that is nonuseful, inoperative, or contradicts known scientific principles, the burden is on the examiner to provide a reasonable basis to support this conclusion. Rejections based on 35 U.S.C. 112, first paragraph and 35 U.S.C. 101 should be made.

Examiner Has Initial Burden To Show That One of Ordinary Skill in the Art Would Reasonably Doubt the Asserted Utility

The examiner has the initial burden of challenging an asserted utility. Only after the examiner has provided evidence showing that one of ordinary skill in the art would reasonably doubt the asserted utility does the burden shift to the applicant to provide rebuttal evidence sufficient to convince one of ordinary skill in the art of the invention's asserted utility. *In re Swartz*, 232 F.3d 862, 863, 56 USPQ2d 1703, 1704 (Fed. Cir. 2000); *In re Brana*, 51 F.3d 1560, 1566, 34 USPQ2d 1436, 1441 (Fed. Cir. 1995) (citing *In re Bundy*, 642 F.2d 430, 433, 209 USPQ 48, 51 (CCPA 1981)).

C. Rebuttal by Applicant

If a rejection under 35 U.S.C. 101 has been properly imposed, along with a corresponding rejection under 35 U.S.C. 112, first paragraph, the burden shifts to the applicant to rebut the *prima facie* showing. *In re Oetiker*, 977 F.2d 1443, 1445, 24 USPQ2d 1443, 1444 (Fed. Cir. 1992). There is no predetermined amount or character of evidence that must be provided by an applicant to support an asserted utility. Rather, the character and amount of evidence needed to support an asserted utility will vary depending on what is claimed (*Ex parte Ferguson*, 117 USPQ 229, 231 (Bd. App. 1957)), and whether the asserted utility appears to contravene established scientific principles and beliefs. *In re Gazave*, 379 F.2d 973, 978, 154 USPQ 92, 96 (CCPA 1967); *In re Chilowsky*, 229 F.2d 457, 462, 108 USPQ 321, 325 (CCPA 1956). Furthermore, the applicant does not have to provide evidence sufficient to establish that an asserted utility is true "beyond a reasonable doubt." *In re Irons*, 340 F.2d 974, 978, 144 USPQ 351, 354 (CCPA 1965). Instead, evidence will be sufficient if, considered as a whole, it leads a person of ordinary skill in the art to conclude that the asserted utility is more likely than not true. See MPEP § 2107.02 for a more detailed discussion of consideration of a reply to a *prima facie* rejection for lack of utility and evaluation of evidence related to utility.

II. WHEN UTILITY REQUIREMENT IS SATISFIED

In some instances, the use will be provided, but the skilled artisan will not know how to effect that use. In such a case, no rejection will be made under 35 U.S.C. 101, but a rejection will be made under 35 U.S.C. 112, first paragraph. As pointed out in *Mowry v. Whitney*, 81 U.S. (14 Wall.) 620 (1871), an invention may in fact have great utility, i.e., may be "a highly useful invention," but the specification may still fail to "enable any person skilled in the art or science" to use the invention. 81 U.S. (14 Wall.) at 644.

2164.08 Enablement Commensurate in Scope With the Claims

All questions of enablement are evaluated against the claimed subject matter. The focus of the examination inquiry is whether everything within the scope of the claim is enabled. Accordingly, the first analytical step requires that the examiner determine exactly what subject matter is encompassed by the claims. The examiner should determine what each claim recites and what the subject matter is when the claim is considered as a whole, not when its parts are analyzed individually. No claim should be overlooked. With respect to dependent claims, 35 U.S.C. 112, fourth paragraph, should be followed. This paragraph states that "a claim in a dependent form shall be construed to incorporate by reference all the limitations of the claim to which it refers" and requires the dependent claim to further limit the subject matter claimed.

The Federal Circuit has repeatedly held that "the specification must teach those skilled in the art how to make and use the full scope of the claimed invention without 'undue experimentation'." *In re Wright*, 999 F.2d 1557, 1561, 27 USPQ2d 1510, 1513 (Fed. Cir. 1993). Nevertheless, not everything necessary to practice the invention need be disclosed. In fact, what is well-known is best omitted. *In re Buchner*, 929 F.2d 660, 661, 18 USPQ2d 1331, 1332 (Fed. Cir. 1991). All that is necessary is that one skilled in the art be able to practice the claimed invention, given the level of knowledge and skill in the art. Further the scope of enablement must only bear a "reasonable correlation" to the scope of the claims. See, e.g., *In re Fisher*, 427 F.2d 833, 839, 166 USPQ 18, 24 (CCPA 1970).

As concerns the breadth of a claim relevant to enablement, the only relevant concern should be whether the scope of enablement provided to one skilled in the art by the disclosure is commensurate with the scope of protection sought by the claims. *In re Moore*, 439 F.2d 1232, 1236, 169 USPQ 236, 239 (CCPA 1971).

The determination of the propriety of a rejection based upon the scope of a claim relative to the scope of the enablement involves two stages of inquiry. The first is to determine how broad the claim is with respect to the disclosure. The entire claim must be considered. The second inquiry is to determine if one skilled in the art is enabled to make and use the entire scope of the claimed invention without undue experimentation.

How a teaching is set forth, by specific example or broad terminology, is not important. *In re Marzocchi*, 439 F.2d 220, 223-24 169 USPQ 367, 370 (CCPA 1971). A rejection of a claim under 35 U.S.C. 112 as broader than the enabling disclosure is a first paragraph enablement rejection and not a second paragraph definiteness rejection. Claims are not rejected as broader than the enabling disclosure under 35 U.S.C. 112 for noninclusion of limitations dealing with factors which must be presumed to be within the level of ordinary skill in the art; the claims need not recite such factors where one of ordinary skill in the art to whom the specification and claims are directed would consider them obvious. *In re Skrivan*, 427 F.2d 801, 806, 166 USPQ 85, 88 (CCPA 1970). One does not look to the claims but to the specification to find out how to practice the claimed invention. *W.L. Gore & Assoc., Inc. v. Garlock, Inc.*, 721 F.2d 1540, 1558, 220 USPQ 303, 316-17 (Fed. Cir. 1983); *In re Johnson*, 558 F.2d 1008, 1017, 194 USPQ 187, 195 (CCPA 1977). In *In re Goffe*, 542 F.2d 564, 567, 191 USPQ 429, 431 (CCPA 1976), the court stated:

> [T]o provide effective incentives, claims must adequately protect inventors. To demand that the first to disclose shall limit his claims to what he has found will work or to materials which meet the guidelines specified for "preferred" materials in a process such as the one herein involved would not serve the constitutional purpose of promoting progress in the useful arts.

When analyzing the enabled scope of a claim, the teachings of the specification must not be ignored because claims are to be given their broadest reasonable interpretation that is consistent with the specification. "That claims are interpreted in light of the specification does not mean that everything in the specification must be read into the claims." *Raytheon Co. v. Roper Corp.*, 724 F.2d 951, 957, 220 USPQ 592, 597 (Fed. Cir. 1983), *cert. denied*, 469 U.S. 835 (1984).

The record must be clear so that the public will have notice as to the patentee's scope of protection when the patent issues. If a reasonable interpretation of the claim is broader than the description in the specification, it is necessary for the examiner to make sure the full scope of the claim is enabled. Limitations and examples in the specification do not generally limit what is covered by the claims.

The breadth of the claims was a factor considered in *Amgen v. Chugai Pharmaceutical Co.*, 927 F.2d 1200, 18 USPQ2d 1016 (Fed. Cir.), *cert. denied*, 502 U.S. 856 (1991). In the *Amgen* case, the patent claims were directed to a purified DNA sequence encoding polypeptides which are analogs of erythropoietin (EPO). The Court stated that:

> Amgen has not enabled preparation of DNA sequences sufficient to support its all-encompassing claims. . . . [D]espite extensive statements in the specification concerning all the analogs of the EPO gene that can be made, there is little enabling disclosure of particular analogs and how to make them. Details for preparing only a few EPO analog genes are disclosed. . . . This disclosure might well justify a generic claim encompassing these and similar analogs, but it represents inadequate support for Amgen's desire to claim all EPO gene analogs. There may be many other genetic sequences that code for EPO-type products. Amgen has told how to make and use only a few of them and is therefore not entitled to claim all of them.

927 F.2d at 1213-14, 18 USPQ2d at 1027. However, when claims are directed to any purified and isolated DNA sequence encoding a specifically named protein where the protein has a specifically identified sequence, a rejection of the claims as broader than the enabling disclosure is generally not appropriate because one skilled in the art could readily determine any one of the claimed embodiments.

See also *In re Wright*, 999 F.2d 1557, 1562, 27 USPQ2d 1510, 1513 (Fed. Cir. 1993) (The evidence did not show that a skilled artisan would have been able to carry out the steps required to practice the full scope of claims which encompass "<u>any and all</u>

live, non-pathogenic vaccines, and processes for making such vaccines, which elicit immunoprotective activity in any animal toward any RNA virus." (original emphasis)); *In re Goodman*, 11 F.3d 1046, 1052, 29 USPQ2d 2010, 2015 (Fed. Cir. 1993) (The specification did not enable the broad scope of the claims for producing mammalian peptides in plant cells because the specification contained only an example of producing gamma-interferon in a dicot species, and there was evidence that extensive experimentation would have been required for encoding mammalian peptide into a monocot plant at the time of filing); *In re Fisher*, 427 F.2d 833, 839, 166 USPQ 18, 24 (CCPA 1970) (Where applicant claimed a composition suitable for the treatment of arthritis having a potency of "at least" a particular value, the court held that the claim was not commensurate in scope with the enabling disclosure because the disclosure was not enabling for compositions having a slightly higher potency. Simply because applicant was the first to achieve a composition beyond a particular threshold potency did not justify or support a claim that would dominate every composition that exceeded that threshold value.); *In re Vaeck*, 947 F.2d 488, 495, 20 USPQ2d 1438, 1444 (Fed. Cir. 1991) (Given the relatively incomplete understanding in the biotechnological field involved, and the lack of a reasonable correlation between the narrow disclosure in the specification and the broad scope of protection sought in the claims, a rejection under 35 U.S.C. 112, first paragraph for lack of enablement was appropriate.).

If a rejection is made based on the view that the enablement is not commensurate in scope with the claim, the examiner should identify the subject matter that is considered to be enabled.

2164.08(a) Single Means Claim

A single means claim, i.e., where a means recitation does not appear in combination with another recited element of means, is subject to an undue breadth rejection under 35 U.S.C. 112, first paragraph. *In re Hyatt*, 708 F.2d 712, 714-715, 218 USPQ 195, 197 (Fed. Cir. 1983) (A single means claim which covered every conceivable means for achieving the stated purpose was held nonenabling for the scope of the claim because the specification disclosed at most only those means known to the inventor.). When claims depend on a recited property, a fact situation comparable to *Hyatt* is possible, where the claim covers every conceivable structure (means) for achieving the stated property (result) while the specification discloses at most only those known to the inventor.

2164.08(b) Inoperative Subject Matter

The presence of inoperative embodiments within the scope of a claim does not necessarily render a claim nonenabled. The standard is whether a skilled person could determine which embodiments that were conceived, but not yet made, would be inoperative or operative with expenditure of no more effort than is normally required in the art. *Atlas Powder Co. v. E.I. du Pont de Nemours & Co.*, 750 F.2d 1569, 1577, 224 USPQ 409, 414 (Fed. Cir. 1984) (prophetic examples do not make the disclosure nonenabling).

Although, typically, inoperative embodiments are excluded by language in a claim (e.g., preamble), the scope of the claim may still not be enabled where undue experimentation is involved in determining those embodiments that are operable. A disclosure of a large number of operable embodiments and the identification of a single inoperative embodiment did not render a claim broader than the enabled scope because undue experimentation was not involved in determining those embodiments that were operable. *In re Angstadt*, 537 F.2d 498, 502-503, 190 USPQ 214, 218 (CCPA 1976). However, claims reading on significant numbers of inoperative embodiments would render claims nonenabled when the specification does not clearly identify the operative embodiments and undue experimentation is involved in determining those that are operative. *Atlas Powder Co. v. E.I. duPont de Nemours & Co.*, 750 F.2d 1569, 1577, 224 USPQ 409, 414 (Fed. Cir. 1984); *In re Cook*, 439 F.2d 730, 735, 169 USPQ 298, 302 (CCPA 1971).

2164.08(c) Critical Feature Not Claimed

A feature which is taught as critical in a specification and is not recited in the claims should result in a rejection of such claim under the enablement provision section of 35 U.S.C. 112. See *In re Mayhew*, 527 F.2d 1229, 1233, 188 USPQ 356, 358 (CCPA 1976). In determining whether an unclaimed feature is critical, the entire disclosure must be considered. Features which are merely preferred are not to be consid-

ered critical. *In re Goffe*, 542 F.2d 564, 567, 191 USPQ 429, 431 (CCPA 1976).

Limiting an applicant to the preferred materials in the absence of limiting prior art would not serve the constitutional purpose of promoting the progress in the useful arts. Therefore, an enablement rejection based on the grounds that a disclosed critical limitation is missing from a claim should be made only when the language of the specification makes it clear that the limitation is critical for the invention to function as intended. Broad language in the disclosure, including the abstract, omitting an allegedly critical feature, tends to rebut the argument of criticality.

2165 The Best Mode Requirement

A third requirement of the first paragraph of 35 U.S.C. 112 is that:

> The specification . . . shall set forth the best mode contemplated by the inventor of carrying out his invention.

"The best mode requirement creates a statutory bargained-for-exchange by which a patentee obtains the right to exclude others from practicing the claimed invention for a certain time period, and the public receives knowledge of the preferred embodiments for practicing the claimed invention." *Eli Lilly & Co. v. Barr Laboratories Inc.*, 251 F.3d 955, 963, 58 USPQ2d 1865, 1874 (Fed. Cir. 2001).

The best mode requirement is a safeguard against the desire on the part of some people to obtain patent protection without making a full disclosure as required by the statute. The requirement does not permit inventors to disclose only what they know to be their second-best embodiment, while retaining the best for themselves. *In re Nelson*, 280 F.2d 172, 126 USPQ 242 (CCPA 1960).

Determining compliance with the best mode requirement requires a two-prong inquiry. First, it must be determined whether, at the time the application was filed, the inventor possessed a best mode for practicing the invention. This is a subjective inquiry which focuses on the inventor's state of mind at the time of filing. Second, if the inventor did possess a best mode, it must be determined whether the written description disclosed the best mode such that a person skilled in the art could practice it. This is an objective inquiry, focusing on the scope of the claimed invention and the level of skill in the art. *Eli Lilly & Co. v. Barr Laboratories Inc.*, 251 F.3d 955, 963, 58 USPQ2d 1865, 1874 (Fed. Cir. 2001).

The failure to disclose a better method will not invalidate a patent if the inventor, at the time of filing the application, did not know of the better method OR did not appreciate that it was the best method. All applicants are required to disclose for the claimed subject matter the best mode contemplated by the inventor even though applicant may not have been the discoverer of that mode. *Benger Labs. Ltd. v. R.K. Laros Co.*, 209 F. Supp. 639, 135 USPQ 11 (E.D. Pa. 1962).

ACTIVE CONCEALMENT OR GROSSLY INEQUITABLE CONDUCT IS NOT REQUIRED TO ESTABLISH FAILURE TO DISCLOSE THE BEST MODE

Failure to disclose the best mode need not rise to the level of active concealment or grossly inequitable conduct in order to support a rejection or invalidate a patent. Where an inventor knows of a specific material that will make possible the successful reproduction of the effects claimed by the patent, but does not disclose it, speaking instead in terms of broad categories, the best mode requirement has not been satisfied. *Union Carbide Corp. v. Borg-Warner*, 550 F.2d 555, 193 USPQ 1 (6th Cir. 1977).

If the failure to set forth the best mode in a patent disclosure is the result of inequitable conduct (e.g., where the patent specification omitted crucial ingredients and disclosed a fictitious and inoperable slurry as Example 1), not only is that patent in danger of being held unenforceable, but other patents dealing with the same technology that are sought to be enforced in the same cause of action are subject to being held unenforceable. *Consolidated Aluminum Corp. v. Foseco Inc.*, 910 F.2d 804, 15 USPQ2d 1481 (Fed. Cir. 1990).

2165.01 Considerations Relevant to Best Mode

I. DETERMINE WHAT IS THE INVENTION

Determine what the invention is — the invention is defined in the claims. The specification need not set forth details not relating to the essence of the invention. *In re Bosy*, 360 F.2d 972, 149 USPQ 789 (CCPA 1966). See also *Northern Telecom Ltd. v. Samsung Electronics Co.*, 215 F.3d 1281, 55 USPQ2d 1065

(Fed. Cir. 2000) (Unclaimed matter that is unrelated to the operation of the claimed invention does not trigger the best mode requirement); *Eli Lilly & Co. v. Barr Laboratories Inc.*, 251 F.3d 955, 966, 58 USPQ2d 1865, 1877 (Fed. Cir. 2001) ("[P]atentee's failure to disclose an unclaimed preferred mode for accomplishing a routine detail does not violate the best mode requirement because one skilled in the art is aware of alternative means for accomplishing the routine detail that would still produce the best mode of the claimed invention.").

II. SPECIFIC EXAMPLE IS NOT REQUIRED

There is no statutory requirement for the disclosure of a specific example — a patent specification is not intended nor required to be a production specification. *In re Gay*, 309 F.2d 768, 135 USPQ 311 (CCPA 1962).

The absence of a specific working example is not necessarily evidence that the best mode has not been disclosed, nor is the presence of one evidence that it has. Best mode may be represented by a preferred range of conditions or group of reactants. *In re Honn*, 364 F.2d 454, 150 USPQ 652 (CCPA 1966).

III. DESIGNATION AS BEST MODE IS NOT REQUIRED

There is no requirement in the statute that applicants point out which of their embodiments they consider to be their best; that the disclosure includes the best mode contemplated by applicants is enough to satisfy the statute. *Ernsthausen v. Nakayama*, 1 USPQ2d 1539 (Bd. Pat. App. & Inter. 1985).

IV. UPDATING BEST MODE IS NOT REQUIRED

There is no requirement to update in the context of a foreign priority application under 35 U.S.C. 119, *Standard Oil Co. v. Montedison, S.p.A.*, 494 F.Supp. 370, 206 USPQ 676 (D.Del. 1980) (better catalyst developed between Italian priority and U.S. filing dates), and continuing applications claiming the benefit of an earlier filing date under 35 U.S.C. 120, *Transco Products, Inc. v. Performance Contracting Inc.*, 38 F.3d 551, 32 USPQ2d 1077 (Fed. Cir. 1994) (continuation under 37 CFR 1.60); *Sylgab Steel and Wire Corp. v. Imoco-Gateway Corp.*, 357 F.Supp. 657, 178 USPQ 22 (N.D. Ill. 1973) (continuation); *Johns-Manville Corp. v. Guardian Industries Corp.*, 586 F.Supp. 1034, 221 USPQ 319 (E.D. Mich. 1983) (continuation and CIP). In the last cited case, the court stated that applicant would have been obliged to disclose an updated refinement if it were essential to the successful practice of the invention <u>and</u> it related to amendments to the CIP that were not present in the parent application. In *Carter-Wallace, Inc. v. Riverton Labs., Inc.*, 433 F.2d 1034, 167 USPQ 656 (2d Cir. 1970), the court assumed, but did not decide, that an applicant must update the best mode when filing a CIP application.

V. DEFECT IN BEST MODE CANNOT BE CURED BY NEW MATTER

If the best mode contemplated by the inventor at the time of filing the application is not disclosed, such a defect cannot be cured by submitting an amendment seeking to put into the specification something required to be there when the patent application was originally filed. *In re Hay*, 534 F.2d 917, 189 USPQ 790 (CCPA 1976).

Any proposed amendment of this type (adding a specific mode of practicing the invention not described in the application as filed) should be treated as new matter. New matter under 35 U.S.C. 132 and 251 should be objected to and coupled with a requirement to cancel the new matter.

2165.02 Best Mode Requirement Compared to Enablement Requirement

The best mode requirement is a separate and distinct requirement from the enablement requirement of the first paragraph of 35 U.S.C. 112. *In re Newton*, 414 F.2d 1400, 163 USPQ 34 (CCPA 1969).

The best mode provision of 35 U.S.C. 112 is not directed to a situation where the application fails to set forth any mode — such failure is equivalent to nonenablement. *In re Glass*, 492 F.2d 1228, 181 USPQ 31 (CCPA 1974).

The enablement requirement looks to placing the subject matter of the claims generally in the possession of the public. If, however, the applicant develops specific instrumentalities or techniques which are recognized by the applicant at the time of filing as the best way of carrying out the invention, then the best

mode requirement imposes an obligation to disclose that information to the public as well. *Spectra-Physics, Inc. v. Coherent, Inc.*, 827 F.2d 1524, 3 USPQ 2d 1737 (Fed. Cir.), *cert. denied*, 484 U.S. 954 (1987).

2165.03 Requirements for Rejection for Lack of Best Mode

ASSUME BEST MODE IS DISCLOSED UNLESS THERE IS EVIDENCE TO THE CONTRARY

The examiner should assume that the best mode is disclosed in the application, unless evidence is presented that is inconsistent with that assumption. It is extremely rare that a best mode rejection properly would be made in *ex parte* prosecution. The information that is necessary to form the basis for a rejection based on the failure to set forth the best mode is rarely accessible to the examiner, but is generally uncovered during discovery procedures in interference, litigation, or other *inter partes* proceedings.

EXAMINER MUST DETERMINE WHETHER THE INVENTOR KNEW THAT ONE MODE WAS BETTER THAN ANOTHER, AND IF SO, WHETHER THE DISCLOSURE IS ADEQUATE TO ENABLE ONE OF ORDINARY SKILL IN THE ART TO PRACTICE THE BEST MODE

According to the approach used by the court in *Chemcast Corp. v. Arco Industries*, 913 F.2d 923, 16 USPQ2d 1033 (Fed. Cir. 1990), a proper best mode analysis has two components:

(A) The first component is a subjective inquiry because it focuses on the inventor's state of mind at the time the application was filed. Unless the examiner has evidence that the inventors had information in their possession

Determine whether, at the time the application was filed, the inventor knew of a mode of practicing the claimed invention that the inventor considered to be better than any other.

(1) at the time the application was filed

(2) that a mode was considered to be better than any others by the inventors

there is no reason to address the second component and there is no proper basis for a best mode rejection. If the facts satisfy the first component, then, and only then, is the following second component analyzed:

(B) Compare what was known in (A) with what was disclosed - is the disclosure adequate to enable one skilled in the art to practice the best mode?

Assessing the adequacy of the disclosure in this regard is largely an objective inquiry that depends on the level of skill in the art. Is the information contained in the specification disclosure sufficient to enable a person skilled in the relevant art to make and use the best mode?

A best mode rejection is proper only when the first inquiry can be answered in the affirmative, and the second inquiry answered in the negative with reasons to support the conclusion that the specification is non-enabling with respect to the best mode.

2165.04 Examples of Evidence of Concealment

In determining the adequacy of a best mode disclosure, only evidence of concealment (accidental or intentional) is to be considered. That evidence must tend to show that the quality of an applicant's best mode disclosure is so poor as to effectively result in concealment.

I. EXAMPLES — BEST MODE REQUIREMENT SATISFIED

In one case, even though the inventor had more information in his possession concerning the contemplated best mode than was disclosed (a known computer program) the specification was held to delineate the best mode in a manner sufficient to require only the application of routine skill to produce a workable digital computer program. *In re Sherwood*, 613 F.2d 809, 204 USPQ 537 (CCPA 1980).

In another case, the claimed subject matter was a time controlled thermostat, but the application did not disclose the specific Quartzmatic motor which was used in a commercial embodiment. The Court concluded that failure to disclose the commercial motor did not amount to concealment since similar clock motors were widely available and widely advertised. There was no evidence that the specific Quartzmatic motor was superior except possibly in price. *Honeywell v. Diamond*, 208 USPQ 452 (D.D.C. 1980).

There was held to be no violation of the best mode requirement even though the inventor did not disclose the only mode of calculating the stretch rate for plas-

tic rods that he used because that mode would have been employed by those of ordinary skill in the art at the time the application was filed. *W.L. Gore & Assoc., Inc. v. Garlock Inc.*, 721 F.2d 1540, 220 USPQ 303 (Fed. Cir. 1983).

There was no best mode violation where there was no evidence that the monoclonal antibodies used by the inventors differed from those obtainable according to the processes described in the specification. It was not disputed that the inventors obtained the antibodies used in the invention by following the procedures in the specification, that these were the inventors' preferred procedures, and that the data reported in the specification was for the antibody that the inventors had actually used. *Scripps Clinic and Research Foundation v. Genentech, Inc.*, 927 F.2d 1565, 18 USPQ 2d 1001 (Fed. Cir. 1991).

Where an organism was created by the insertion of genetic material into a cell obtained from generally available sources, all that was required to satisfy the best mode requirement was an adequate description of the means for carrying out the invention, not deposit of the cells. As to the observation that no scientist could ever duplicate exactly the cell used by applicants, the court observed that the issue is whether the disclosure is adequate, not that an exact duplication is necessary. *Amgen, Inc. v. Chugai Pharmaceutical Co.*, 927 F.2d 1200, 18 USPQ 2d 1016 (Fed. Cir. 1991).

There was held to be no violation of the best mode requirement where the Solicitor argued that concealment could be inferred from the disclosure in a specification that each analog is "surprisingly and unexpectedly more useful than one of the corresponding prostaglandins . . . for at least one of the pharmacological purposes." It was argued that appellant must have had test results to substantiate this statement and this data should have been disclosed. The court concluded that no withholding could be inferred from general statements of increased selectivity and narrower spectrum of potency for these novel analogs, conclusions which could be drawn from the elementary pharmacological testing of the analogs. *In re Bundy*, 642 F.2d 430, 435, 209 USPQ 48, 52 (CCPA 1981).

II. EXAMPLES — BEST MODE REQUIREMENT NOT SATISFIED

The best mode requirement was held to be violated where inventors of a laser failed to disclose details of their preferred TiCuSil brazing method which were not contained in the prior art and were contrary to criteria for the use of TiCuSil as contained in the literature. *Spectra-Physics, Inc. v. Coherent, Inc.*, 827 F.2d 1524, 3 USPQ 2d 1737 (Fed. Cir. 1987).

The best mode requirement was violated because an inventor failed to disclose whether to use a specific surface treatment that he knew was necessary to the satisfactory performance of his invention, even though how to perform the treatment itself was known in the art. The argument that the best mode requirement may be met solely by reference to what was known in the prior art was rejected as incorrect. *Dana Corp. v. IPC Ltd. Partnership*, 860 F.2d 415, 8 USPQ2d 1692 (Fed. Cir. 1988).

2171 Two Separate Requirements for Claims Under 35 U.S.C. 112, Second Paragraph

The second paragraph of 35 U.S.C. 112 is directed to requirements for the claims:

> The specification shall conclude with one or more claims particularly pointing out and distinctly claiming the subject matter which the applicant regards as his invention.

There are two separate requirements set forth in this paragraph:

(A) the claims must set forth the subject matter that applicants regard as their invention; and

(B) the claims must particularly point out and distinctly define the metes and bounds of the subject matter that will be protected by the patent grant.

The first requirement is a subjective one because it is dependent on what the applicants for a patent regard as their invention. The second requirement is an objective one because it is not dependent on the views of applicant or any particular individual, but is evaluated in the context of whether the claim is definite — i.e., whether the scope of the claim is clear to a hypothetical person possessing the ordinary level of skill in the pertinent art.

Although an essential purpose of the examination process is to determine whether or not the claims define an invention that is both novel and nonobvious over the prior art, another essential purpose of patent examination is to determine whether or not the claims are precise, clear, correct, and unambiguous. The uncertainties of claim scope should be removed, as much as possible, during the examination process.

The inquiry during examination is patentability of the invention as applicant regards it. If the claims do not particularly point out and distinctly claim that which applicants regard as their invention, the appropriate action by the examiner is to reject the claims under 35 U.S.C. 112, second paragraph. *In re Zletz*, 893 F.2d 319, 13 USPQ2d 1320 (Fed. Cir. 1989). If a rejection is based on 35 U.S.C. 112, second paragraph, the examiner should further explain whether the rejection is based on indefiniteness or on the failure to claim what applicants regard as their invention. *Ex parte Ionescu*, 222 USPQ 537, 539 (Bd. App. 1984).

2172 Subject Matter Which Applicants Regard as Their Invention

I. FOCUS FOR EXAMINATION

A rejection based on the failure to satisfy this requirement is appropriate only where applicant has stated, somewhere other than in the application as filed, that the invention is something different from what is defined by the claims. In other words, the invention set forth in the claims must be presumed, in the absence of evidence to the contrary, to be that which applicants regard as their invention. *In re Moore*, 439 F.2d 1232, 169 USPQ 236 (CCPA 1971).

II. EVIDENCE TO THE CONTRARY

Evidence that shows that a claim does not correspond in scope with that which applicant regards as applicant's invention may be found, for example, in contentions or admissions contained in briefs or remarks filed by applicant, *Solomon v. Kimberly-Clark Corp.*, 216 F.3d 1372, 55 USPQ2d 1279 (Fed. Cir. 2000); *In re Prater*, 415 F.2d 1393, 162 USPQ 541 (CCPA 1969), or in affidavits filed under 37 CFR 1.132, *In re Cormany*, 476 F.2d 998, 177 USPQ 450 (CCPA 1973). The content of applicant's specification is not used as evidence that the scope of the claims is inconsistent with the subject matter which applicants regard as their invention. As noted in *In re Ehrreich*, 590 F.2d 902, 200 USPQ 504 (CCPA 1979), agreement, or lack thereof, between the claims and the specification is properly considered only with respect to 35 U.S.C. 112, first paragraph; it is irrelevant to compliance with the second paragraph of that section.

III. SHIFT IN CLAIMS PERMITTED

The second paragraph of 35 U.S.C. 112 does not prohibit applicants from changing what they regard as their invention during the pendency of the application. *In re Saunders*, 444 F.2d 599, 170 USPQ 213 (CCPA 1971) (Applicant was permitted to claim and submit comparative evidence with respect to claimed subject matter which originally was only the preferred embodiment within much broader claims (directed to a method).). The fact that claims in a continuation application were directed to originally disclosed subject matter which applicants had not regarded as part of their invention when the parent application was filed was held not to prevent the continuation application from receiving benefits of the filing date of the parent application under 35 U.S.C. 120. *In re Brower*, 433 F.2d 813, 167 USPQ 684 (CCPA 1970).

2172.01 Unclaimed Essential Matter

A claim which omits matter disclosed to be essential to the invention as described in the specification or in other statements of record may be rejected under 35 U.S.C. 112, first paragraph, as not enabling. *In re Mayhew*, 527 F.2d 1229, 188 USPQ 356 (CCPA 1976). See also MPEP § 2164.08(c). Such essential matter may include missing elements, steps or necessary structural cooperative relationships of elements described by the applicant(s) as necessary to practice the invention.

In addition, a claim which fails to interrelate essential elements of the invention as defined by applicant(s) in the specification may be rejected under 35 U.S.C. 112, second paragraph, for failure to point out and distinctly claim the invention. See *In re Venezia*, 530 F.2d 956, 189 USPQ 149 (CCPA 1976); *In re Collier*, 397 F.2d 1003, 158 USPQ 266 (CCPA 1968).

2173 Claims Must Particularly Point Out and Distinctly Claim the Invention

The primary purpose of this requirement of definiteness of claim language is to ensure that the scope of the claims is clear so the public is informed of the boundaries of what constitutes infringement of the patent. A secondary purpose is to provide a clear measure of what applicants regard as the invention so that it can be determined whether the claimed invention meets all the criteria for patentability and whether the specification meets the criteria of 35 U.S.C. 112, first paragraph with respect to the claimed invention.

2173.01 Claim Terminology

A fundamental principle contained in 35 U.S.C. 112, second paragraph is that applicants are their own lexicographers. They can define in the claims what they regard as their invention essentially in whatever terms they choose so long as the terms are not used in ways that are contrary to accepted meanings in the art. Applicant may use functional language, alternative expressions, negative limitations, or any style of expression or format of claim which makes clear the boundaries of the subject matter for which protection is sought. As noted by the court in *In re Swinehart*, 439 F.2d 210, 160 USPQ 226 (CCPA 1971), a claim may not be rejected solely because of the type of language used to define the subject matter for which patent protection is sought.

2173.02 Clarity and Precision

The examiner's focus during examination of claims for compliance with the requirement for definiteness of 35 U.S.C. 112, second paragraph is whether the claim meets the threshold requirements of clarity and precision, not whether more suitable language or modes of expression are available. When the examiner is satisfied that patentable subject matter is disclosed, and it is apparent to the examiner that the claims are directed to such patentable subject matter, he or she should allow claims which define the patentable subject matter with a reasonable degree of particularity and distinctness. Some latitude in the manner of expression and the aptness of terms should be permitted even though the claim language is not as precise as the examiner might desire. Examiners are encouraged to suggest claim language to applicants to improve the clarity or precision of the language used, but should not reject claims or insist on their own preferences if other modes of expression selected by applicants satisfy the statutory requirement.

The essential inquiry pertaining to this requirement is whether the claims set out and circumscribe a particular subject matter with a reasonable degree of clarity and particularity. Definiteness of claim language must be analyzed, not in a vacuum, but in light of:

(A) The content of the particular application disclosure;

(B) The teachings of the prior art; and

(C) The claim interpretation that would be given by one possessing the ordinary level of skill in the pertinent art at the time the invention was made.

In reviewing a claim for compliance with 35 U.S.C. 112, second paragraph, the examiner must consider the claim as a whole to determine whether the claim apprises one of ordinary skill in the art of its scope and, therefore, serves the notice function required by 35 U.S.C. 112, second paragraph. See, e.g., *Solomon v. Kimberly-Clark Corp.*, 216 F.3d 1372, 1379, 55 USPQ2d 1279, 1283 (Fed. Cir. 2000). See also *In re Larsen*, No. 01-1092 (Fed. Cir. May 9, 2001) (unpublished) (The preamble of the *Larsen* claim recited only a hanger and a loop but the body of the claim positively recited a linear member. The court observed that the totality of all the limitations of the claim and their interaction with each other must be considered to ascertain the inventor's contribution to the art. Upon review of the claim in its entirety, the court concluded that the claim at issue apprises one of ordinary skill in the art of its scope and, therefore, serves the notice function required by 35 U.S.C. 112, paragraph 2.). If the scope of the invention sought to be patented cannot be determined from the language of the claims with a reasonable degree of certainty, a rejection of the claims under 35 U.S.C. 112, second paragraph is appropriate. *In re Wiggins*, 488 F.2d 538, 179 USPQ 421 (CCPA 1973).

2173.03 Inconsistency Between Claim nd Specification Disclosure or Prior Art

Although the terms of a claim may appear to be definite, inconsistency with the specification disclosure or prior art teachings may make an otherwise definite claim take on an unreasonable degree of uncertainty. *In re Cohn*, 438 F.2d 989, 169 USPQ 95 (CCPA 1971); *In re Hammack*, 427 F.2d 1378, 166 USPQ 204 (CCPA 1970). In *Cohn*, the claim was directed to a process of treating a surface with a corroding solution until the metallic appearance is supplanted by an "opaque" appearance. Noting that no claim may be read apart from and independent of the supporting disclosure on which it is based, the court found that the description, definitions and examples set forth in the specification relating to the appearance of the surface after treatment were inherently inconsistent and rendered the claim indefinite.

2173.04 Breadth Is Not Indefiniteness

Breadth of a claim is not to be equated with indefiniteness. *In re Miller*, 441 F.2d 689, 169 USPQ 597 (CCPA 1971). If the scope of the subject matter embraced by the claims is clear, and if applicants have not otherwise indicated that they intend the invention to be of a scope different from that defined in the claims, then the claims comply with 35 U.S.C. 112, second paragraph.

Undue breadth of the claim may be addressed under different statutory provisions, depending on the reasons for concluding that the claim is too broad. If the claim is too broad because it does not set forth that which applicants regard as their invention as evidenced by statements outside of the application as filed, a rejection under 35 U.S.C. 112, second paragraph would be appropriate. If the claim is too broad because it is not supported by the original description or by an enabling disclosure, a rejection under 35 U.S.C. 112, first paragraph would be appropriate. If the claim is too broad because it reads on the prior art, a rejection under either 35 U.S.C. 102 or 103 would be appropriate.

2173.05 Specific Topics Related to Issues Under 35 U.S.C. 112, Second Paragraph

The following sections are devoted to a discussion of specific topics where issues under 35 U.S.C. 112, second paragraph have been addressed. These sections are not intended to be an exhaustive list of the issues that can arise under 35 U.S.C. 112, second paragraph, but are intended to provide guidance in areas that have been addressed with some frequency in recent examination practice. The court and Board decisions cited are representative. As with all appellate decisions, the results are largely dictated by the facts in each case. The use of the same language in a different context may justify a different result.

2173.05(a) New Terminology

THE MEANING OF EVERY TERM SHOULD BE APPARENT

The meaning of every term used in a claim should be apparent from the prior art or from the specification and drawings at the time the application is filed. Applicants need not confine themselves to the terminology used in the prior art, but are required to make clear and precise the terms that are used to define the invention whereby the metes and bounds of the claimed invention can be ascertained. During patent examination, the pending claims must be given the broadest reasonable interpretation consistent with the specification. *In re Morris*, 127 F.3d 1048, 1054, 44 USPQ2d 1023, 1027 (Fed. Cir. 1997); *In re Prater*, 415 F.2d 1393, 162 USPQ 541 (CCPA 1969). See also MPEP § 2111 - § 2111.01. When the specification states the meaning that a term in the claim is intended to have, the claim is examined using that meaning, in order to achieve a complete exploration of the applicant's invention and its relation to the prior art. *In re Zletz*, 893 F.2d 319, 13 USPQ2d 1320 (Fed. Cir. 1989).

THE REQUIREMENT FOR CLARITY AND PRECISION MUST BE BALANCED WITH THE LIMITATIONS OF THE LANGUAGE

Courts have recognized that it is not only permissible, but often desirable, to use new terms that are frequently more precise in describing and defining the

new invention. *In re Fisher*, 427 F.2d 833, 166 USPQ 18 (CCPA 1970). Although it is difficult to compare the claimed invention with the prior art when new terms are used that do not appear in the prior art, this does not make the new terms indefinite.

New terms are often used when a new technology is in its infancy or is rapidly evolving. The requirements for clarity and precision must be balanced with the limitations of the language and the science. If the claims, read in light of the specification, reasonably apprise those skilled in the art both of the utilization and scope of the invention, and if the language is as precise as the subject matter permits, the statute (35 U.S.C. 112, second paragraph) demands no more. *Shatterproof Glass Corp. v. Libbey Owens Ford Co.*, 758 F.2d 613, 225 USPQ 634 (Fed. Cir. 1985) (interpretation of "freely supporting" in method claims directed to treatment of a glass sheet); *Hybritech, Inc. v. Monoclonal Antibodies, Inc.*, 802 F.2d 1367, 231 USPQ 81 (Fed. Cir. 1986) (interpretation of a limitation specifying a numerical value for antibody affinity where the method of calculation was known in the art at the time of filing to be imprecise). This does not mean that the examiner must accept the best effort of applicant. If the proposed language is not considered as precise as the subject matter permits, the examiner should provide reasons to support the conclusion of indefiniteness and is encouraged to suggest alternatives that are free from objection.

A TERM MAY NOT BE GIVEN A MEANING REPUGNANT TO ITS USUAL MEANING

While a term used in the claims may be given a special meaning in the description of the invention, generally no term may be given a meaning repugnant to the usual meaning of the term. *In re Hill*, 161 F.2d 367, 73 USPQ 482 (CCPA 1947). However, it has been stated that consistent with the well-established axiom in patent law that a patentee is free to be his or her own lexicographer, a patentee may use terms in a manner contrary to or inconsistent with one or more of their ordinary meanings. *Hormone Research Foundation Inc. v. Genentech Inc.*, 904 F.2d 1558, 15 USPQ2d 1039 (Fed. Cir. 1990). Accordingly, when there is more than one definition for a term, it is incumbent upon applicant to make clear which definition is being relied upon to claim the invention. Until the meaning of a term or phrase used in a claim is clear, a rejection under 35 U.S.C. 112, second paragraph is appropriate. It is appropriate to compare the meaning of terms given in technical dictionaries in order to ascertain the accepted meaning of a term in the art. *In re Barr*, 444 F.2d 588, 170 USPQ 330 (CCPA 1971).

2173.05(b) Relative Terminology

The fact that claim language, including terms of degree, may not be precise, does not automatically render the claim indefinite under 35 U.S.C. 112, second paragraph. *Seattle Box Co., v. Industrial Crating & Packing, Inc.*, 731 F.2d 818, 221 USPQ 568 (Fed. Cir. 1984). Acceptability of the claim language depends on whether one of ordinary skill in the art would understand what is claimed, in light of the specification.

WHEN A TERM OF DEGREE IS PRESENT, DETERMINE WHETHER A STANDARD IS DISCLOSED OR WHETHER ONE OF ORDINARY SKILL IN THE ART WOULD BE APPRISED OF THE SCOPE OF THE CLAIM

When a term of degree is presented in a claim, first a determination is to be made as to whether the specification provides some standard for measuring that degree. If it does not, a determination is made as to whether one of ordinary skill in the art, in view of the prior art and the status of the art, would be nevertheless reasonably apprised of the scope of the invention. Even if the specification uses the same term of degree as in the claim, a rejection may be proper if the scope of the term is not understood when read in light of the specification. While, as a general proposition, broadening modifiers are standard tools in claim drafting in order to avoid reliance on the doctrine of equivalents in infringement actions, when the scope of the claim is unclear a rejection under 35 U.S.C. 112, second paragraph is proper. See *In re Wiggins*, 488 F. 2d 538, 541, 179 USPQ 421, 423 (CCPA 1973).

When relative terms are used in claims wherein the improvement over the prior art rests entirely upon size or weight of an element in a combination of elements, the adequacy of the disclosure of a standard is of greater criticality.

REFERENCE TO AN OBJECT THAT IS VARIABLE MAY RENDER A CLAIM INDEFINITE

A claim may be rendered indefinite by reference to an object that is variable. For example, the Board has held that a limitation in a claim to a bicycle that recited "said front and rear wheels so spaced as to give a wheelbase that is between 58 percent and 75 percent of the height of the rider that the bicycle was designed for" was indefinite because the relationship of parts was not based on any known standard for sizing a bicycle to a rider, but on a rider of unspecified build. *Ex parte Brummer*, 12 USPQ2d 1653 (Bd. Pat. App. & Inter. 1989). On the other hand, a claim limitation specifying that a certain part of a pediatric wheelchair be "so dimensioned as to be insertable through the space between the doorframe of an automobile and one of the seats" was held to be definite. *Orthokinetics, Inc. v. Safety Travel Chairs, Inc.*, 806 F.2d 1565, 1 USPQ2d 1081 (Fed. Cir. 1986). The court stated that the phrase "so dimensioned" is as accurate as the subject matter permits, noting that the patent law does not require that all possible lengths corresponding to the spaces in hundreds of different automobiles be listed in the patent, let alone that they be listed in the claims.

A. "About"

The term "about" used to define the area of the lower end of a mold as between 25 to about 45% of the mold entrance was held to be clear, but flexible. *Ex parte Eastwood*, 163 USPQ 316 (Bd. App. 1968). Similarly, in *W.L. Gore & Associates, Inc. v. Garlock, Inc.*, 721 F.2d 1540, 220 USPQ 303 (Fed. Cir. 1983), the court held that a limitation defining the stretch rate of a plastic as "exceeding about 10% per second" is definite because infringement could clearly be assessed through the use of a stopwatch. However, the court held that claims reciting "at least about" were invalid for indefiniteness where there was close prior art and there was nothing in the specification, prosecution history, or the prior art to provide any indication as to what range of specific activity is covered by the term "about." *Amgen, Inc. v. Chugai Pharmaceutical Co.*, 927 F.2d 1200, 18 USPQ2d 1016 (Fed. Cir. 1991).

B. "Essentially"

The phrase "a silicon dioxide source that is essentially free of alkali metal" was held to be definite because the specification contained guidelines and examples that were considered sufficient to enable a person of ordinary skill in the art to draw a line between unavoidable impurities in starting materials and essential ingredients. *In re Marosi*, 710 F.2d 799, 218 USPQ 289 (CCPA 1983). The court further observed that it would be impractical to require applicants to specify a particular number as a cutoff between their invention and the prior art.

C. "Similar"

The term "similar" in the preamble of a claim that was directed to a nozzle "for high-pressure cleaning units or similar apparatus" was held to be indefinite since it was not clear what applicant intended to cover by the recitation "similar" apparatus. *Ex parte Kristensen*, 10 USPQ2d 1701 (Bd. Pat. App. & Inter. 1989).

A claim in a design patent application which read: "The ornamental design for a feed bunk or similar structure as shown and described." was held to be indefinite because it was unclear from the specification what applicant intended to cover by the recitation of "similar structure." *Ex parte Pappas*, 23 USPQ2d 1636 (Bd. Pat. App. & Inter. 1992).

D. "Substantially"

The term "substantially" is often used in conjunction with another term to describe a particular characteristic of the claimed invention. It is a broad term. *In re Nehrenberg*, 280 F.2d 161, 126 USPQ 383 (CCPA 1960). The court held that the limitation "to substantially increase the efficiency of the compound as a copper extractant" was definite in view of the general guidelines contained in the specification. *In re Mattison*, 509 F.2d 563, 184 USPQ 484 (CCPA 1975). The court held that the limitation "which produces substantially equal E and H plane illumination patterns" was definite because one of ordinary skill in the art would know what was meant by "substantially equal." *Andrew Corp. v. Gabriel Electronics*, 847 F.2d 819, 6 USPQ2d 2010 (Fed. Cir. 1988).

E. "Type"

The addition of the word "type" to an otherwise definite expression (e.g., Friedel-Crafts catalyst) extends the scope of the expression so as to render it indefinite. *Ex parte Copenhaver*, 109 USPQ 118 (Bd. App. 1955). Likewise, the phrase "ZSM-5-type aluminosilicate zeolites" was held to be indefinite because it was unclear what "type" was intended to convey. The interpretation was made more difficult by the fact that the zeolites defined in the dependent claims were not within the genus of the type of zeolites defined in the independent claim. *Ex parte Attig*, 7 USPQ2d 1092 (Bd. Pat. App. & Inter. 1986).

F. Other Terms

The phrases "relatively shallow," "of the order of," "the order of about 5mm," and "substantial portion" were held to be indefinite because the specification lacked some standard for measuring the degree intended and, therefore, properly rejected as indefinite under 35 U.S.C. 112, second paragraph. *Ex parte Oetiker*, 23 USPQ2d 1641 (Bd. Pat. App. & Inter. 1992).

The term "or like material" in the context of the limitation "coke, brick, or like material" was held to render the claim indefinite since it was not clear how the materials other than coke or brick had to resemble the two specified materials to satisfy the limitations of the claim. *Ex parte Caldwell*, 1906 C.D. 58 (Comm'r Pat. 1906).

The terms "comparable" and "superior" were held to be indefinite in the context of a limitation relating the characteristics of the claimed material to other materials - "properties that are superior to those obtained with comparable" prior art materials. *Ex parte Anderson*, 21 USPQ2d 1241 (Bd. Pat. App. & Inter. 1991). It was not clear from the specification which properties had to be compared and how comparable the properties would have to be to determine infringement issues. Further, there was no guidance as to the meaning of the term "superior."

2173.05(c) Numerical Ranges and Amounts Limitations

Generally, the recitation of specific numerical ranges in a claim does not raise an issue of whether a claim is definite.

I. NARROW AND BROADER RANGES IN THE SAME CLAIM

Use of a narrow numerical range that falls within a broader range in the same claim may render the claim indefinite when the boundaries of the claim are not discernible. Description of examples and preferences is properly set forth in the specification rather than in a single claim. A narrower range or preferred embodiment may also be set forth in another independent claim or in a dependent claim. If stated in a single claim, examples and preferences lead to confusion over the intended scope of the claim. In those instances where it is not clear whether the claimed narrower range is a limitation, a rejection under 35 U.S.C. 112, second paragraph should be made. The Examiner should analyze whether the metes and bounds of the claim are clearly set forth. Examples of claim language which have been held to be indefinite are (A) "a temperature of between 45 and 78 degrees Celsius, preferably between 50 and 60 degrees Celsius"; and (B) "a predetermined quantity, for example, the maximum capacity."

While a single claim that includes both a broad and a narrower range may be indefinite, it is not improper under 35 U.S.C. 112, second paragraph to present a dependent claim that sets forth a narrower range for an element than the range set forth in the claim from which it depends. For example, if claim 1 reads "A circuit ... wherein the resistance is 70-150 ohms." and claim 2 reads "The circuit of claim 1 wherein the resistance is 70-100 ohms.", then claim 2 should not be rejected as indefinite.

II. OPEN-ENDED NUMERICAL RANGES

Open-ended numerical ranges should be carefully analyzed for definiteness. For example, when an independent claim recites a composition comprising "at least 20% sodium" and a dependent claim sets forth specific amounts of nonsodium ingredients which add up to 100%, apparently to the exclusion of sodium, an ambiguity is created with regard to the "at least" limitation (unless the percentages of the nonsodium ingredients are based on the weight of the nonsodium ingredients). On the other hand, the court held that a composition claimed to have a theoretical content greater than 100% (i.e., 20-80% of A, 20-80% of B, and 1-25% of C) was not indefinite simply because the claims may be read in theory to include composi-

tions that are impossible in fact to formulate. It was observed that subject matter which cannot exist in fact can neither anticipate nor infringe a claim. *In re Kroekel*, 504 F.2d 1143, 183 USPQ 610 (CCPA 1974).

In a claim directed to a chemical reaction process, a limitation required that the amount of one ingredient in the reaction mixture should "be maintained at less than 7 mole percent" based on the amount of another ingredient. The examiner argued that the claim was indefinite because the limitation sets only a maximum amount and is inclusive of substantially no ingredient resulting in termination of any reaction. The court did not agree be cause the claim was clearly directed to a reaction process which did not warrant distorting the overall meaning of the claim to preclude performing the claimed process. *In re Kirsch*, 498 F.2d 1389, 182 USPQ 286 (CCPA 1974).

Some terms have been determined to have the following meanings in the factual situations of the reported cases: the term "up to" includes zero as a lower limit, *In re Mochel*, 470 F.2d 638, 176 USPQ 194 (CCPA 1974); and "a moisture content of not more than 70% by weight" reads on dry material, *Ex parte Khusid*, 174 USPQ 59 (Bd. App. 1971).

III. "EFFECTIVE AMOUNT"

The common phrase "an effective amount" may or may not be indefinite. The proper test is whether or not one skilled in the art could determine specific values for the amount based on the disclosure. See *In re Mattison*, 509 F.2d 563, 184 USPQ 484 (CCPA 1975). The phrase "an effective amount . . . for growth stimulation" was held to be definite where the amount was not critical and those skilled in the art would be able to determine from the written disclosure, including the examples, what an effective amount is. *In re Halleck*, 422 F.2d 911, 164 USPQ 647 (CCPA 1970). The phrase "an effective amount" has been held to be indefinite when the claim fails to state the function which is to be achieved and more than one effect can be implied from the specification or the relevant art. *In re Fredericksen* 213 F.2d 547, 102 USPQ 35 (CCPA 1954). The more recent cases have tended to accept a limitation such as "an effective amount" as being definite when read in light of the supporting disclosure and in the absence of any prior art which would give rise to uncertainty about the scope of the claim. In *Ex parte Skuballa*, 12 USPQ2d 1570 (Bd. Pat. App. & Inter. 1989), the Board held that a pharmaceutical composition claim which recited an "effective amount of a compound of claim 1" without stating the function to be achieved was definite, particularly when read in light of the supporting disclosure which provided guidelines as to the intended utilities and how the uses could be effected.

2173.05(d) Exemplary Claim Language ("for example," "such as")

Description of examples or preferences is properly set forth in the specification rather than the claims. If stated in the claims, examples and preferences lead to confusion over the intended scope of a claim. In those instances where it is not clear whether the claimed narrower range is a limitation, a rejection under 35 U.S.C. 112, second paragraph should be made. The Examiner should analyze whether the metes and bounds of the claim are clearly set forth. Examples of claim language which have been held to be indefinite because the intended scope of the claim was unclear are:

(A) "R is halogen, for example, chlorine";

(B) "material such as rock wool or asbestos" *Ex parte Hall*, 83 USPQ 38 (Bd. App. 1949);

(C) "lighter hydrocarbons, such, for example, as the vapors or gas produced" *Ex parte Hasche*, 86 USPQ 481 (Bd. App. 1949); and

(D) "normal operating conditions such as while in the container of a proportioner" *Ex parte Steigerwald*, 131 USPQ 74 (Bd. App. 1961).

2173.05(e) Lack of Antecedent Basis

A claim is indefinite when it contains words or phrases whose meaning is unclear. The lack of clarity could arise where a claim refers to "said lever" or "the lever," where the claim contains no earlier recitation or limitation of a lever and where it would be unclear as to what element the limitation was making reference. Similarly, if two different levers are recited earlier in the claim, the recitation of "said lever" in the same or subsequent claim would be unclear where it is uncertain which of the two levers was intended. A claim which refers to "said aluminum lever," but recites only "a lever" earlier in the claim, is indefinite because it is uncertain as to the lever to which reference is made. Obviously, however, the failure to pro-

vide explicit antecedent basis for terms does not always render a claim indefinite. If the scope of a claim would be reasonably ascertainable by those skilled in the art, then the claim is not indefinite. *Ex parte Porter*, 25 USPQ2d 1144, 1145 (Bd. Pat. App. & Inter. 1992) ("controlled stream of fluid" provided reasonable antecedent basis for "the controlled fluid"). Inherent components of elements recited have antecedent basis in the recitation of the components themselves. For example, the limitation "the outer surface of said sphere" would not require an antecedent recitation that the sphere has an outer surface.

EXAMINER SHOULD SUGGEST CORRECTIONS TO ANTECEDENT PROBLEMS

Antecedent problems in the claims are typically drafting oversights that are easily corrected once they are brought to the attention of applicant. The examiner's task of making sure the claim language complies with the requirements of the statute should be carried out in a positive and constructive way, so that minor problems can be identified and easily corrected, and so that the major effort is expended on more substantive issues. However, even though indefiniteness in claim language is of semantic origin, it is not rendered unobjectionable simply because it could have been corrected. *In re Hammack*, 427 F.2d 1384 n.5, 166 USPQ 209 n.5 (CCPA 1970).

A CLAIM TERM WHICH HAS NO ANTECEDENT BASIS IN THE DISCLOSURE IS NOT NECESSARILY INDEFINITE

The mere fact that a term or phrase used in the claim has no antecedent basis in the specification disclosure does not mean, necessarily, that the term or phrase is indefinite. There is no requirement that the words in the claim must match those used in the specification disclosure. Applicants are given a great deal of latitude in how they choose to define their invention so long as the terms and phrases used define the invention with a reasonable degree of clarity and precision.

A CLAIM IS NOT *PER SE* INDEFINITE IF THE BODY OF THE CLAIM RECITES ADDITIONAL ELEMENTS WHICH DO NOT APPEAR IN THE PREAMBLE

The mere fact that the body of a claim recites additional elements which do not appear in the claim's preamble does not render the claim indefinite under 35 U.S.C. 112, second paragraph. See *In re Larsen*, No. 01-1092 (Fed. Cir. May 9, 2001) (unpublished) (The preamble of the *Larsen* claim recited only a hanger and a loop but the body of the claim positively recited a linear member. The examiner rejected the claim under 35 U.S.C. 112, second paragraph because the omission from the claim's preamble of a critical element (i.e., a linear member) renders that claim indefinite. The court reversed the examiner's rejection and stated that the totality of all the limitations of the claim and their interaction with each other must be considered to ascertain the inventor's contribution to the art. Upon review of the claim in its entirety, the court concluded that the claim at issue apprises one of ordinary skill in the art of its scope and, therefore, serves the notice function required by 35 U.S.C. 112, paragraph 2.).

2173.05(f) Reference to Limitations in Another Claim

A claim which makes reference to a preceding claim to define a limitation is an acceptable claim construction which should not necessarily be rejected as improper or confusing under 35 U.S.C. 112, second paragraph. For example, claims which read: "The product produced by the method of claim 1." or "A method of producing ethanol comprising contacting amylose with the culture of claim 1 under the following conditions ....." are not indefinite under 35 U.S.C. 112, second paragraph, merely because of the reference to another claim. See also *Ex parte Porter*, 25 USPQ2d 1144 (Bd. Pat. App. & Inter. 1992) where reference to "the nozzle of claim 7" in a method claim was held to comply with 35 U.S.C. 112, second paragraph. However, where the format of making reference to limitations recited in another claim results in confusion, then a rejection would be proper under 35 U.S.C. 112, second paragraph.

2173.05(g) Functional Limitations

A functional limitation is an attempt to define something by what it does, rather than by what it is (e.g., as evidenced by its specific structure or specific ingredients). There is nothing inherently wrong with defining some part of an invention in functional terms. Functional language does not, in and of itself, render a claim improper. *In re Swinehart*, 439 F.2d 210, 169 USPQ 226 (CCPA 1971).

A functional limitation must be evaluated and considered, just like any other limitation of the claim, for what it fairly conveys to a person of ordinary skill in the pertinent art in the context in which it is used. A functional limitation is often used in association with an element, ingredient, or step of a process to define a particular capability or purpose that is served by the recited element, ingredient or step. Whether or not the functional limitation complies with 35 U.S.C. 112, second paragraph is a different issue from whether the limitation is properly supported under 35 U.S.C. 112, first paragraph or is distinguished over the prior art. A few examples are set forth below to illustrate situations where the issue of whether a functional limitation complies with 35 U.S.C. 112, second paragraph was considered.

It was held that the limitation used to define a radical on a chemical compound as "incapable of forming a dye with said oxidizing developing agent" although functional, was perfectly acceptable because it set definite boundaries on the patent protection sought. *In re Barr*, 444 F.2d 588, 170 USPQ 33 (CCPA 1971).

In a claim that was directed to a kit of component parts capable of being assembled, the Court held that limitations such as "members adapted to be positioned" and "portions . . . being resiliently dilatable whereby said housing may be slidably positioned" serve to precisely define present structural attributes of interrelated component parts of the claimed assembly. *In re Venezia*, 530 F.2d 956, 189 USPQ 149 (CCPA 1976).

2173.05(h) Alternative Limitations

I. MARKUSH GROUPS

Alternative expressions are permitted if they present no uncertainty or ambiguity with respect to the question of scope or clarity of the claims. One acceptable form of alternative expression, which is commonly referred to as a Markush group, recites members as being "selected from the group consisting of A, B and C." See *Ex parte Markush*, 1925 C.D. 126 (Comm'r Pat. 1925).

Ex parte Markush sanctions claiming a genus expressed as a group consisting of certain specified materials. Inventions in metallurgy, refractories, ceramics, pharmacy, pharmacology and biology are most frequently claimed under the Markush formula but purely mechanical features or process steps may also be claimed by using the Markush style of claiming. See *Ex parte Head*, 214 USPQ 551 (Bd. App. 1981); *In re Gaubert*, 524 F.2d 1222, 187 USPQ 664 (CCPA 1975); and *In re Harnisch*, 631 F.2d 716, 206 USPQ 300 (CCPA 1980). It is improper to use the term "comprising" instead of "consisting of." *Ex parte Dotter*, 12 USPQ 382 (Bd. App. 1931).

The use of Markush claims of diminishing scope should not, in itself, be considered a sufficient basis for objection to or rejection of claims. However, if such a practice renders the claims indefinite or if it results in undue multiplicity, an appropriate rejection should be made.

Similarly, the double inclusion of an element by members of a Markush group is not, in itself, sufficient basis for objection to or rejection of claims. Rather, the facts in each case must be evaluated to determine whether or not the multiple inclusion of one or more elements in a claim renders that claim indefinite. The mere fact that a compound may be embraced by more than one member of a Markush group recited in the claim does not necessarily render the scope of the claim unclear. For example, the Markush group, "selected from the group consisting of amino, halogen, nitro, chloro and alkyl" should be acceptable even though "halogen" is generic to "chloro."

The materials set forth in the Markush group ordinarily must belong to a recognized physical or chemical class or to an art-recognized class. However, when the Markush group occurs in a claim reciting a process or a combination (not a single compound), it is sufficient if the members of the group are disclosed in the specification to possess at least one property in common which is mainly responsible for their function in the claimed relationship, and it is clear from their very nature or from the prior art that all of them possess this property. While in the past the test for

Markush-type claims was applied as liberally as possible, present practice which holds that claims reciting Markush groups are not generic claims (MPEP § 803) may subject the groups to a more stringent test for propriety of the recited members. Where a Markush expression is applied only to a portion of a chemical compound, the propriety of the grouping is determined by a consideration of the compound as a whole, and does not depend on there being a community of properties in the members of the Markush expression.

When materials recited in a claim are so related as to constitute a proper Markush group, they may be recited in the conventional manner, or alternatively. For example, if "wherein R is a material selected from the group consisting of A, B, C and D" is a proper limitation, then "wherein R is A, B, C or D" shall also be considered proper.

Subgenus Claim

Genus, subgenus, and Markush-type claims, if properly supported by the disclosure, are all acceptable ways for applicants to claim their inventions. They provide different ways to present claims of different scope. Examiners should therefore not reject Markush-type claims merely because there are genus claims that encompass the Markush-type claims.

See also MPEP § 608.01(p) and § 715.03.

See MPEP § 803.02 for restriction practice re Markush-type claims.

II. "OR" TERMINOLOGY

Alternative expressions using "or" are acceptable, such as "wherein R is A, B, C, or D." The following phrases were each held to be acceptable and not in violation of 35 U.S.C. 112, second paragraph in *In re Gaubert*, 524 F.2d 1222, 187 USPQ 664 (CCPA 1975): "made entirely or in part of"; "at least one piece"; and "iron, steel or any other magnetic material."

III. "OPTIONALLY"

An alternative format which requires some analysis before concluding whether or not the language is indefinite involves the use of the term "optionally." In *Ex parte Cordova*, 10 USPQ2d 1949 (Bd. Pat. App. & Inter. 1989) the language "containing A, B, and optionally C" was considered acceptable alternative language because there was no ambiguity as to which alternatives are covered by the claim. A similar holding was reached with regard to the term "optionally" in *Ex parte Wu*, 10 USPQ2d 2031 (Bd. Pat. App. & Inter. 1989). In the instance where the list of potential alternatives can vary and ambiguity arises, then it is proper to make a rejection under 35 U.S.C. 112, second paragraph and explain why there is confusion.

2173.05(i) Negative Limitations

The current view of the courts is that there is nothing inherently ambiguous or uncertain about a negative limitation. So long as the boundaries of the patent protection sought are set forth definitely, albeit negatively, the claim complies with the requirements of 35 U.S.C. 112, second paragraph. Some older cases were critical of negative limitations because they tended to define the invention in terms of what it was not, rather than pointing out the invention. Thus, the court observed that the limitation "R is an alkenyl radical other than 2-butenyl and 2,4-pentadienyl" was a negative limitation that rendered the claim indefinite because it was an attempt to claim the invention by excluding what the inventors did not invent rather than distinctly and particularly pointing out what they did invent. *In re Schechter*, 205 F.2d 185, 98 USPQ 144 (CCPA 1953).

A claim which recited the limitation "said homopolymer being free from the proteins, soaps, resins, and sugars present in natural Hevea rubber" in order to exclude the characteristics of the prior art product, was considered definite because each recited limitation was definite. *In re Wakefield*, 422 F.2d 897, 899, 904, 164 USPQ 636, 638, 641 (CCPA 1970). In addition, the court found that the negative limitation "incapable of forming a dye with said oxidized developing agent" was definite because the boundaries of the patent protection sought were clear. *In re Barr*, 444 F.2d 588, 170 USPQ 330 (CCPA 1971).

Any negative limitation or exclusionary proviso must have basis in the original disclosure. If alternative elements are positively recited in the specification, they may be explicitly excluded in the claims. See *In re Johnson*, 558 F.2d 1008, 1019, 194 USPQ 187, 196 (CCPA 1977) ("[the] specification, having described the whole, necessarily described the part remaining."). See also *Ex parte Grasselli*, 231 USPQ 393 (Bd. App. 1983), *aff'd mem.*, 738 F.2d 453 (Fed. Cir. 1984). The mere absence of a positive recitation

is not basis for an exclusion. Any claim containing a negative limitation which does not have basis in the original disclosure should be rejected under 35 U.S.C. 112, first paragraph as failing to comply with the written description requirement. Note that a lack of literal basis in the specification for a negative limitation may not be sufficient to establish a *prima facie* case for lack of descriptive support. *Ex parte Parks*, 30 USPQ2d 1234, 1236 (Bd. Pat. App. & Inter. 1993). See MPEP § 2163 - § 2163.07(b) for a discussion of the written description requirement of 35 U.S.C. 112, first paragraph.

2173.05(j) Old Combination

A CLAIM SHOULD NOT BE REJECTED ON THE GROUND OF OLD COMBINATION

With the passage of the 1952 Patent Act, the courts and the Board have taken the view that a rejection based on the principle of old combination is NO LONGER VALID. Claims should be considered proper so long as they comply with the provisions of 35 U.S.C. 112, second paragraph.

A rejection on the basis of old combination was based on the principle applied in *Lincoln Engineering Co. v. Stewart-Warner Corp.*, 303 U.S. 545, 37 USPQ 1 (1938). The principle was that an inventor who made an improvement or contribution to but one element of a generally old combination, should not be able to obtain a patent on the entire combination including the new and improved element. A rejection required the citation of a single reference which broadly disclosed a combination of the claimed elements functionally cooperating in substantially the same manner to produce substantially the same results as that of the claimed combination. The case of *In re Hall*, 208 F.2d 370, 100 USPQ 46 (CCPA 1953) illustrates an application of this principle.

The court pointed out in *In re Bernhardt*, 417 F.2d 1395, 163 USPQ 611 (CCPA 1969) that the statutory language (particularly point out and distinctly claim) is the only proper basis for an old combination rejection, and in applying the rejection, that language determines what an applicant has a right and obligation to do. A majority opinion of the Board of Appeals held that Congress removed the underlying rationale of *Lincoln Engineering* in the 1952 Patent Act, and thereby effectively legislated that decision out of existence. *Ex parte Barber*, 187 USPQ 244 (Bd. App. 1974). Finally, the Court of Appeals for the Federal Circuit, in *Radio Steel and Mfg. Co. v. MTD Products, Inc.*, 731 F.2d 840, 221 USPQ 657 (Fed. Cir. 1984), followed the *Bernhardt* case, and ruled that a claim was not invalid under *Lincoln Engineering* because the claim complied with the requirements of 35 U.S.C. 112, second paragraph. Accordingly, a claim should not be rejected on the ground of old combination.

2173.05(k) Aggregation

Rejections on the ground of aggregation should be based upon a lack of cooperation between the elements of the claim.

Example of aggregation: A washing machine associated with a dial telephone.

A claim is not necessarily aggregative because the various elements do not function simultaneously, e.g., a typewriter. *In re Worrest*, 201 F.2d 930, 96 USPQ 381 (CCPA 1953). Neither is a claim necessarily aggregative merely because elements which do cooperate are set forth in specific detail.

A rejection on aggregation should be made only after consideration of the court's comments in *In re Gustafson*, 331 F.2d 905, 141 USPQ 585 (CCPA 1964), wherein the court indicated it is improper to reject claims as "aggregative" without specifying the statutory basis of the rejection, i.e., an applicant is entitled to know whether his claims are being rejected under 35 U.S.C. 101, 103, or 112. In *Gustafson*, the court found that the real objection to the claims was that they failed to comply with 35 U.S.C. 112, second paragraph.

2173.05(m) Prolix

Examiners should reject claims as prolix only when they contain such long recitations or unimportant details that the scope of the claimed invention is rendered indefinite thereby. Claims are rejected as prolix when they contain long recitations that the metes and bounds of the claimed subject matter cannot be determined.

2173.05(n) Multiplicity

37 CFR 1.75. Claim(s).

(a) The specification must conclude with a claim particularly pointing out and distinctly claiming the subject matter which the applicant regards as his invention or discovery.

(b) More than one claim may be presented provided they differ substantially from each other and are not unduly multiplied.

(c) One or more claims may be presented in dependent form, referring back to and further limiting another claim or claims in the same application. Any dependent claim which refers to more than one other claim ("multiple dependent claim") shall refer to such other claims in the alternative only. A multiple dependent claim shall not serve as a basis for any other multiple dependent claim. For fee calculation purposes under § 1.16, a multiple dependent claim will be considered to be that number of claims to which direct reference is made therein. For fee calculation purposes, also, any claim depending from a multiple dependent claim will be considered to be that number of claims to which direct reference is made in that multiple dependent claim. In addition to the other filing fees, any original application which is filed with, or is amended to include, multiple dependent claims must have paid the fee set forth in § 1.16(d). Claims in dependent form shall be construed to include all the limitations of the claim incorporated by reference into the dependent claim. A multiple dependent claim shall be construed to incorporate by reference all the limitations of each of the particular claims In relation to which it is being considered.

(d) (1) The claim or claims must conform to the invention as set forth in the remainder of the specification and the terms and phrases used in the claims must find clear support or antecedent basis in the description so that the meaning of the terms may be ascertained by reference to the description (See § 1.58(a)).

(2) See §§ 1.141 to 1.146 as to claiming different inventions in one application.

(e) Where the nature of the case admits, as in the case of an improvement, any independent claim should contain in the following order, (1) a preamble comprising a general description of all elements or steps of the claimed combination which are conventional or known, (2) a phrase such as "wherein the improvement comprises," and (3) those elements, steps, and/or relationships which constitute that portion of the claimed combination which the applicant regards as the new or improved portion.

(f) If there are several claims, they shall be numbered consecutively in Arabic numerals.

(g) The least restrictive claim should be presented as claim number 1, and all dependent claims should be grouped together with the claim or claims to which they refer to the extent practicable.

(h) The claim or claims must commence on a separate sheet.

(i) Where a claim sets forth a plurality of elements or steps, each element or step of the claim should be separated by a line indentation.

An unreasonable number of claims, that is, unreasonable in view of the nature and scope of applicant's invention and the state of the art, may afford a basis for a rejection on the ground of multiplicity. A rejection on this ground should include all the claims in the case inasmuch as it relates to confusion of the issue.

To avoid the possibility that an application which has been rejected on the ground of undue multiplicity of claims may be appealed to the Board of Patent Appeals and Interferences prior to an examination on the merits of at least some of the claims presented, the examiner should, at the time of making the rejection on the ground of multiplicity of claims, specify the number of claims which in his or her judgment is sufficient to properly define applicant's invention and require the applicant to select certain claims, not to exceed the number specified, for examination on the merits. The examiner should be reasonable in setting the number to afford the applicant some latitude in claiming the invention.

The earlier views of the Court of Customs and Patent Appeals on multiplicity were set forth in *In re Chandler*, 254 F.2d 396, 117 USPQ 361 (1958) and *In re Chandler*, 319 F.2d 211, 225, 138 USPQ 138, 148 (1963) (Applicant's latitude in stating their claims in regard to number and phraseology employed "should not be extended to sanction that degree of repetition and multiplicity which beclouds definition in a maze of confusion."). These views have been somewhat revised by its views in *In re Flint*, 411 F.2d 1353, 1357, 162 USPQ 228, 231 (CCPA 1969) ("The [42] claims differed from one another and we have no difficulty in understanding the scope of protection. Nor is it clear, on this record, that the examiner or board was confused by the presentation of claims in this case or that the public will be.") and *In re Wakefield*, 422 F.2d 897, 902, 164 USPQ 636, 639 (CCPA 1970) ("Examination of forty claims in a single application may be tedious work, but this is no reason for saying that the invention is obscured by the large number of claims. We note that the claims were clear enough for the examiner to apply references against all of them in his first action.").

If a rejection on multiplicity is in order the examiner should make a telephone call explaining that the claims are unduly multiplied and will be rejected on that ground. Note MPEP § 408. The examiner should request selection of a specified number of claims for purposes of examination.

If time for consideration is requested arrangements should be made for a second telephone call, preferably within three working days.

When claims are selected, a formal multiplicity rejection is made, including a complete record of the telephone interview, followed by an action on the selected claims.

When applicant refuses to comply with the telephone request, a formal multiplicity rejection is made. The applicant's reply to a formal multiplicity rejection of the examiner, to be complete, must either:

(A) Reduce the number of claims presented to those selected previously by telephone, or if no previous selection has been made to a number not exceeding the number specified by the examiner in the Office action, thus overcoming the rejection based upon the ground of multiplicity, or

(B) In the event of a traverse of said rejection applicant, besides specifically pointing out the supposed errors of the multiplicity rejection, is required to confirm the selection previously made by telephone, or if no previous selection has been made, select certain claims for purpose of examination, the number of which is not greater than the number specified by the examiner.

If the rejection on multiplicity is adhered to, all claims retained will be included in such rejection and the selected claims only will be additionally examined on their merits. This procedure preserves applicant's right to have the rejection on multiplicity reviewed by the Board of Patent Appeals and Interferences.

Also, it is possible to reject one claim on an allowed claim if they differ only by subject matter old in the art. This ground of rejection is set forth in *Ex parte Whitelaw*, 1915 C.D. 18, 219 O.G. 1237 (Comm'r Pat. 1914). The *Ex parte Whitelaw* doctrine is restricted to cases where the claims are unduly multiplied or are substantial duplicates. *Ex parte Kochan*, 131 USPQ 204, 206 (Bd. App. 1961).

2173.05(o) Double Inclusion

There is no *per se* rule that "double inclusion" is improper in a claim. *In re Kelly*, 305 F.2d 909, 916, 134 USPQ 397, 402 (CCPA 1962) ("Automatic reliance upon a ' rule against double inclusion' will lead to as many unreasonable interpretations as will automatic reliance upon a 'rule allowing double inclusion' . The governing consideration is not *double inclusion*, but rather is what is a reasonable construction of the language of the claims."). Older cases, such as *Ex parte White*, 759 O.G. 783 (Bd. App. 1958) and *Ex parte Clark*, 174 USPQ 40 (Bd. App. 1971) should be applied with care, according to the facts of each case.

The facts in each case must be evaluated to determine whether or not the multiple inclusion of one or more elements in a claim gives rise to indefiniteness in that claim. The mere fact that a compound may be embraced by more than one member of a Markush group recited in the claim does not lead to any uncertainty as to the scope of that claim for either examination or infringement purposes. On the other hand, where a claim directed to a device can be read to include the same element twice, the claim may be indefinite. *Ex parte Kristensen*, 10 USPQ2d 1701 (Bd. Pat. App. & Inter. 1989).

2173.05(p) Claim Directed to Product-By-Process or Product and Process

There are many situations where claims are permissively drafted to include a reference to more than one statutory class of invention.

I. PRODUCT-BY-PROCESS

A product-by-process claim, which is a product claim that defines the claimed product in terms of the process by which it is made, is proper. *In re Luck*, 476 F.2d 650, 177 USPQ 523 (CCPA 1973); *In re Pilkington*, 411 F.2d 1345, 162 USPQ 145 (CCPA 1969); *In re Steppan*, 394 F.2d 1013, 156 USPQ 143 (CCPA 1967). A claim to a device, apparatus, manufacture, or composition of matter may contain a reference to the process in which it is intended to be used without being objectionable under 35 U.S.C. 112, second paragraph, so long as it is clear that the claim is directed to the product and not the process.

An applicant may present claims of varying scope even if it is necessary to describe the claimed product in product-by-process terms. *Ex parte Pantzer*, 176 USPQ 141 (Bd. App. 1972).

II. PRODUCT AND PROCESS IN THE SAME CLAIM

A single claim which claims both an apparatus and the method steps of using the apparatus is indefinite under 35 U.S.C. 112, second paragraph. In *Ex parte Lyell*, 17 USPQ2d 1548 (Bd. Pat. App. & Inter. 1990), a claim directed to an automatic transmission workstand and the method steps of using it was held to be ambiguous and properly rejected under 35 U.S.C. 112, second paragraph.

Such claims should also be rejected under 35 U.S.C. 101 based on the theory that the claim is directed to neither a "process" nor a "machine," but rather embraces or overlaps two different statutory classes of invention set forth in 35 U.S.C. 101 which is drafted so as to set forth the statutory classes of invention in the alternative only. *Id.* at 1551.

2173.05(q) "Use" Claims

Attempts to claim a process without setting forth any steps involved in the process generally raises an issue of indefiniteness under 35 U.S.C. 112, second paragraph. For example, a claim which read: "A process for using monoclonal antibodies of claim 4 to isolate and purify human fibroblast interferon." was held to be indefinite because it merely recites a use without any active, positive steps delimiting how this use is actually practiced. *Ex parte Erlich*, 3 USPQ2d 1011 (Bd. Pat. App. & Inter. 1986).

Other decisions suggest that a more appropriate basis for this type of rejection is 35 U.S.C. 101. In *Ex parte Dunki*, 153 USPQ 678 (Bd. App. 1967), the Board held the following claim to be an improper definition of a process: "The use of a high carbon austenitic iron alloy having a proportion of free carbon as a vehicle brake part subject to stress by sliding friction." In *Clinical Products Ltd. v. Brenner*, 255 F. Supp. 131, 149 USPQ 475 (D.D.C. 1966), the district court held the following claim was definite, but that it was not a proper process claim under 35 U.S.C. 101: "The use of a sustained release therapeutic agent in the body of ephedrine absorbed upon polystyrene sulfonic acid."

Although a claim should be interpreted in light of the specification disclosure, it is generally considered improper to read limitations contained in the specification into the claims. See *In re Prater*, 415 F.2d 1393, 162 USPQ 541 (CCPA 1969) and *In re Winkhaus*, 527 F.2d 637, 188 USPQ 129 (CCPA 1975), which discuss the premise that one cannot rely on the specification to impart limitations to the claim that are not recited in the claim.

A "USE" CLAIM SHOULD BE REJECTED UNDER ALTERNATIVE GROUNDS BASED ON 35 U.S.C 101 AND 112

In view of the split of authority as discussed above, the most appropriate course of action would be to reject a "use" claim under alternative grounds based on 35 U.S.C. 101 and 112.

BOARD HELD STEP OF "UTILIZING" WAS NOT INDEFINITE

It is often difficult to draw a fine line between what is permissible, and what is objectionable from the perspective of whether a claim is definite. In the case of *Ex parte Porter*, 25 USPQ2d 1144 (Bd. Pat. App. & Inter. 1992), the Board held that a claim which clearly recited the step of "utilizing" was not indefinite under 35 U.S.C. 112, second paragraph. (Claim was to "A method for unloading nonpacked, nonbridging and packed, bridging flowable particle catalyst and bead material from the opened end of a reactor tube which comprises utilizing the nozzle of claim 7.").

2173.05(r) Omnibus Claim

Some applications are filed with an omnibus claim which reads as follows: A device substantially as shown and described. This claim should be rejected under 35 U.S.C. 112, second paragraph because it is indefinite in that it fails to point out what is included or excluded by the claim language. See *Ex parte Fressola*, 27 USPQ2d 1608 (Bd. Pat. App. & Inter. 1993), for a discussion of the history of omnibus claims and an explanation of why omnibus claims do not comply with the requirements of 35 U.S.C. 112, second paragraph.

Such a claim can be rejected using Form Paragraph 7.35. See MPEP § 706.03(d).

For cancelation of such a claim by examiner's amendment, see MPEP § 1302.04(b).

2173.05(s) Reference to Figures or Tables

Where possible, claims are to be complete in themselves. Incorporation by reference to a specific figure

or table "is permitted only in exceptional circumstances where there is no practical way to define the invention in words and where it is more concise to incorporate by reference than duplicating a drawing or table into the claim. Incorporation by reference is a necessity doctrine, not for applicant's convenience." *Ex parte Fressola*, 27 USPQ2d 1608, 1609 (Bd. Pat. App. & Inter. 1993) (citations omitted).

Reference characters corresponding to elements recited in the detailed description and the drawings may be used in conjunction with the recitation of the same element or group of elements in the claims. See MPEP § 608.01(m).

2173.05(t) Chemical Formula

Claims to chemical compounds and compositions containing chemical compounds often use formulas that depict the chemical structure of the compound. These structures should not be considered indefinite nor speculative in the absence of evidence that the assigned formula is in error. The absence of corroborating spectroscopic or other data cannot be the basis for finding the structure indefinite. See *Ex parte Morton*, 134 USPQ 407 (Bd. App. 1961), and *Ex parte Sobin*, 139 USPQ 528 (Bd. App. 1962).

A claim to a chemical compound is not indefinite merely because a structure is not presented or because a partial structure is presented. For example, the claim language at issue in *In re Fisher*, 427 F.2d 833, 166 USPQ 18 (CCPA 1970) referred to a chemical compound as a "polypeptide of at least 24 amino acids having the following sequence." A rejection under 35 U.S.C. 112, second paragraph for failure to identify the entire structure was reversed and the court held: "While the absence of such a limitation obviously broadens the claim and raises questions of sufficiency of disclosure, it does not render the claim indefinite." Chemical compounds may be claimed by a name that adequately describes the material to one skilled in the art. See *Martin v. Johnson*, 454 F.2d 746, 172 USPQ 391 (CCPA 1972). A compound of unknown structure may be claimed by a combination of physical and chemical characteristics. See *Ex parte Brian*, 118 USPQ 242 (Bd. App. 1958). A compound may also be claimed in terms of the process by which it is made without raising an issue of indefiniteness.

2173.05(u) Trademarks or Trade Names in a Claim

The presence of a trademark or trade name in a claim is not, *per se*, improper under 35 U.S.C. 112, second paragraph, but the claim should be carefully analyzed to determine how the mark or name is used in the claim. It is important to recognize that a trademark or trade name is used to identify a source of goods, and not the goods themselves. Thus a trademark or trade name does not identify or describe the goods associated with the trademark or trade name. See definitions of trademark and trade name in MPEP § 608.01(v). A list of some trademarks is found in Appendix I.

If the trademark or trade name is used in a claim as a limitation to identify or describe a particular material or product, the claim does not comply with the requirements of the 35 U.S.C. 112, second paragraph. *Ex parte Simpson*, 218 USPQ 1020 (Bd. App. 1982). The claim scope is uncertain since the trademark or trade name cannot be used properly to identify any particular material or product. In fact, the value of a trademark would be lost to the extent that it became descriptive of a product, rather than used as an identification of a source or origin of a product. Thus, the use of a trademark or trade name in a claim to identify or describe a material or product would not only render a claim indefinite, but would also constitute an improper use of the trademark or trade name.

If a trademark or trade name appears in a claim and is not intended as a limitation in the claim, the question of why it is in the claim should be addressed. Does its presence in the claim cause confusion as to the scope of the claim? If so, the claim should be rejected under 35 U.S.C. 112, second paragraph.

2173.05(v) Mere Function of Machine

Process or method claims are not subject to rejection by U.S. Patent and Trademark Office examiners under 35 U.S.C. 112, second paragraph, solely on the ground that they define the inherent function of a disclosed machine or apparatus. *In re Tarczy-Hornoch*, 397 F.2d 856, 158 USPQ 141 (CCPA 1968). The court in *Tarczy-Hornoch* held that a process claim, otherwise patentable, should not be rejected merely because the application of which it is part discloses

apparatus which will inherently carry out the recited steps.

2173.06 Prior Art Rejection of Claim Rejected as Indefinite

All words in a claim must be considered in judging the patentability of a claim against the prior art. *In re Wilson*, 424 F.2d 1382, 165 USPQ 494 (CCPA 1970). The fact that terms may be indefinite does not make the claim obvious over the prior art. When the terms of a claim are considered to be indefinite, at least two approaches to the examination of an indefinite claim relative to the prior art are possible.

First, where the degree of uncertainty is not great, and where the claim is subject to more than one interpretation and at least one interpretation would render the claim unpatentable over the prior art, an appropriate course of action would be for the examiner to enter two rejections: (A) a rejection based on indefiniteness under 35 U.S.C. 112, second paragraph; and (B) a rejection over the prior art based on the interpretation of the claims which renders the prior art applicable. See, e.g., *Ex parte Ionescu*, 222 USPQ 537 (Bd. App. 1984). When making a rejection over prior art in these circumstances, it is important for the examiner to point out how the claim is being interpreted. Second, where there is a great deal of confusion and uncertainty as to the proper interpretation of the limitations of a claim, it would not be proper to reject such a claim on the basis of prior art. As stated in *In re Steele*, 305 F.2d 859, 134 USPQ 292 (CCPA 1962), a rejection under 35 U.S.C. 103 should not be based on considerable speculation about the meaning of terms employed in a claim or assumptions that must be made as to the scope of the claims.

The first approach is recommended from an examination standpoint because it avoids piecemeal examination in the event that the examiner's 35 U.S.C. 112, second paragraph rejection is not affirmed, and may give applicant a better appreciation for relevant prior art if the claims are redrafted to avoid the 35 U.S.C. 112, second paragraph rejection.

2174 Relationship Between the Requirements of the First and Second Paragraphs of 35 U.S.C. 112

The requirements of the first and second paragraphs of 35 U.S.C. 112 are separate and distinct. If a description or the enabling disclosure of a specification is not commensurate in scope with the subject matter encompassed by a claim, that fact alone does not render the claim imprecise or indefinite or otherwise not in compliance with 35 U.S.C. 112, second paragraph; rather, the claim is based on an insufficient disclosure (35 U.S.C. 112, first paragraph) and should be rejected on that ground. *In re Borkowski*, 422 F.2d 904, 164 USPQ 642 (CCPA 1970). If the specification discloses that a particular feature or element is critical or essential to the practice of the invention, failure to recite or include that particular feature or element in the claims may provide a basis for a rejection based on the ground that those claims are not supported by an enabling disclosure. *In re Mayhew*, 527 F.2d 1229, 188 USPQ 356 (CCPA 1976). In *Mayhew*, the examiner argued that the only mode of operation of the process disclosed in the specification involved the use of a cooling zone at a particular location in the processing cycle. The claims were rejected because they failed to specify either a cooling step or the location of the step in the process. The court was convinced that the cooling bath and its location were essential, and held that claims which failed to recite the use of a cooling zone, specifically located, were not supported by an enabling disclosure (35 U.S.C. 112, first paragraph).

In addition, if a claim is amended to include an invention that is not described in the application as filed, a rejection of that claim under 35 U.S.C. 112, first paragraph as being directed to subject matter that is not described in the specification as filed may be appropriate. *In re Simon*, 302 F.2d 737, 133 USPQ 524 (CCPA 1962). In *Simon*, which involved a reissue application containing claims to a reaction product of a composition, applicant presented claims to a reaction product of a composition comprising the subcombination A+B+C, whereas the original claims and description of the invention were directed to a composition comprising the combination A+B+C+D+E. The court found no significant support for the argument

that ingredients D+E were not essential to the claimed reaction product and concluded that claims directed to the reaction product of a subcombination A+B+C were not described (35 U.S.C. 112, first paragraph) in the application as filed. See also *In re Panagrossi*, 277 F.2d 181, 125 USPQ 410 (CCPA 1960).

2181 Identifying a 35 U.S.C. 112, Sixth Paragraph Limitation

This section sets forth guidelines for the examination of 35 U.S.C. 112, sixth paragraph "means or step plus function" limitations in a claim. These guidelines are based on the Office's current understanding of the law and are believed to be fully consistent with binding precedent of the Supreme Court, the Federal Circuit and the Federal Circuit's predecessor courts. These guidelines do not constitute substantive rulemaking and hence do not have the force and effect of law.

The Court of Appeals for the Federal Circuit, in its *en banc* decision *In re Donaldson Co.*, 16 F.3d 1189, 29 USPQ2d 1845 (Fed. Cir. 1994), decided that a "means-or-step-plus-function" limitation should be interpreted in a manner different than patent examining practice had previously dictated. The *Donaldson* decision affects only the manner in which the scope of a "means or step plus function" limitation in accordance with 35 U.S.C. 112, sixth paragraph, is interpreted during examination. *Donaldson* does not directly affect the manner in which any other section of the patent statutes is interpreted or applied.

When making a determination of patentability under 35 U.S.C. 102 or 103, past practice was to interpret a "means or step plus function" limitation by giving it the "broadest reasonable interpretation." Under the PTO's long-standing practice this meant interpreting such a limitation as reading on any prior art means or step which performed the function specified in the claim without regard for whether the prior art means or step was equivalent to the corresponding structure, material or acts described in the specification. However, in *Donaldson,* the Federal Circuit stated:

> Per our holding, the "broadest reasonable interpretation" that an examiner may give means-plus-function language is that statutorily mandated in paragraph six. Accordingly, the PTO may not disregard the structure disclosed in the specification corresponding to such language when rendering a patentability determination.

LANGUAGE FALLING WITHIN 35 U.S.C. 112, SIXTH PARAGRAPH

The USPTO must apply 35 U.S.C. 112, sixth paragraph in appropriate cases, and give claims their broadest reasonable interpretation, in light of and consistent with the written description of the invention in the application. See *Donaldson*, 16 F.3d at 1194, 29 USPQ2d at 1850 (stating that 35 U.S.C. 112, sixth paragraph "merely sets a limit on how broadly the PTO may construe means-plus-function language under the rubric of reasonable interpretation.' "). The Federal Circuit has held that applicants (and reexamination patentees) before the USPTO have the opportunity and the obligation to define their inventions precisely during proceedings before the PTO. See *In re Morris*, 127 F.3d 1048, 1056– 57, 44 USPQ2d 1023, 1029– 30 (Fed. Cir. 1997) (35 U.S.C. 112, second paragraph places the burden of precise claim drafting on the applicant); *Inre Zletz*, 893 F.2d 319, 322, 13 USPQ2d 1320, 1322 (Fed. Cir. 1989) (manner of claim interpretation that is used by courts in litigation is not the manner of claim interpretation that is applicable during prosecution of a pending application before the PTO); *Sage Prods., Inc. v. Devon Indus., Inc.*, 126 F.3d 1420, 1425, 44 USPQ2d 1103, 1107 (Fed. Cir. 1997) (patentee who had a clear opportunity to negotiate broader claims during prosecution but did not do so, may not seek to expand the claims through the doctrine of equivalents, for it is the patentee, not the public, who must bear the cost of failure to seek protection for this foreseeable alteration of its claimed structure). Applicants and reexamination patentees before the USPTO have an opportunity and obligation to specify, consistent with these guidelines, when a claim limitation invokes 35 U.S.C. 112, sixth paragraph.

A claim limitation will be interpreted to invoke 35 U.S.C. 112, sixth paragraph if it meets the following 3-prong analysis:

(A) the claim limitations must use the phrase "means for " or "step for ";

(B) the "means for " or "step for " must be modified by functional language; and

(C) the phrase "means for " or "step for " must not be modified by sufficient structure, material or acts for achieving the specified function.

With respect to the first prong of this analysis, a claim element that does not include the phrase "means for" or "step for" will not be considered to invoke 35 U.S.C. 112, sixth paragraph. If an applicant wishes to have the claim limitation treated under 35 U.S.C. 112, sixth paragraph, applicant must either: (A) amend the claim to include the phrase "means for" or "step for" in accordance with these guidelines; or (B) show that even though the phrase "means for" or "step for" is not used, the claim limitation is written as a function to be performed and does not recite sufficient structure, material, or acts which would preclude application of 35 U.S.C. 112, sixth paragraph. See *Watts v. XL Systems, Inc.*, 232 F.3d 877, 56 USPQ2d 1836 (Fed. Cir. 2000) (Claim limitations were held not to invoke 35 U.S.C. 112, sixth paragraph because the absence of the term "means" raised the presumption that the limitations were not in means-plus-function form, nor was the presumption rebutted.).

While traditional "means for" or "step for" language does not automatically make an element a means-(or step-) plus-function element, conversely, lack of such language does not prevent a limitation from being construed as a means-(or step-) plus-function limitation. See *Signtech USA, Ltd. v. Vutek, Inc.*, 174 F.3d 1352, 1356, 50 USPQ2d 1372, 1374– 75 (Fed. Cir.1999) ("ink delivery means positioned on ..." invokes 35 U.S.C. 112, sixth paragraph since the phrase "ink delivery means" is equivalent to "means for ink delivery"); *Al-Site Corp. v. VSI Int' l, Inc.*, 174 F.3d 1308, 1317-19, 50 USPQ2d 1161, 1166-67 (Fed. Cir. 1999) (although the claim elements "eyeglass hanger member" and "eyeglass contacting member" include a function, these claim elements do not invoke 35 U.S.C. 112, sixth paragraph because the claims themselves contain sufficient structural limitations for performing these functions); *Seal-Flex, Inc. v. Athletic Track and Court Construction*, 172 F.3d 836, 850, 50 USPQ2d 1225, 1234 (Fed. Cir. 1999) (Radar, J., concurring) ("claim elements without express step-plus-function language may nevertheless fall within 112 6 if they merely claim the underlying function without recitation of acts for performing that function...In general terms, the underlying function' of a method claim element corresponds to *what* that element ultimately accomplishes in relationship to what the other elements of the claim and the claim as a whole accomplish. Acts,' on the other hand, correspond to *how* the function is accomplished...If the claim element uses the phrase step for,' then § 112, 6 is presumed to apply...On the other hand, the term step' alone and the phrase steps of' tend to show that § 112, 6 does not govern that limitation."); *Personalized Media Communications LLC v. ITC*, 161 F.3d 696, 703– 04, 48 USPQ2d 1880, 1886– 87 (Fed. Cir. 1998); *Mas-Hamilton Group v. LaGard Inc.*, 156 F.3d 1206, 1213, 48 USPQ2d 1010, 1016 (Fed. Cir. 1998) ("lever moving element for moving the lever" and "movable link member for holding the lever...and for releasing the lever" were construed as means-plus-function limitations invoking 35 U.S.C. 112, sixth paragraph since the claimed limitations were described in terms of their function not their mechanical structure); *Ethicon, Inc. v. United States Surgical Corp.*, 135 F.3d 1456, 1463, 45 USPQ2d 1545, 1550 (Fed. Cir. 1998) ("use of the word means 'gives rise to a presumption that the inventor used the term advisedly to invoke the statutory mandates for means-plus-function clauses' "); *O.I. Corp. v. Tekmar*, 115 F.3d 1576, 1583, 42 USPQ2d 1777, 1782 (Fed. Cir. 1997) (method claim that paralleled means-plus-function apparatus claim but lacked "step for" language did not invoke 35 U.S.C. 112, sixth paragraph). Thus, absent an express recitation of "means for" or "step for" in the limitation, the broadest reasonable interpretation will not be limited to "corresponding structure...and equivalents thereof." *Morris*, 127 F.3d at 1055, 44 USPQ2d at 1028 ("no comparable mandate in the patent statute that relates the claim scope of non-§ 112 paragarph 6 claims to particular matter found in the specification").

With respect to the second prong of this analysis, see *York Prod., Inc. v. Central Tractor Farm & Family Center*, 99 F.3d 1568, 1574, 40 USPQ2d 1619, 1624 (Fed. Cir. 1996) (holding that a claim limitation containing the term "means" does not invoke 35 U.S.C. 112, sixth paragraph if the claim limitation does not link the term "means" to a specific function). It must be clear that the element in the claims is set forth, at least in part, by the function it performs as opposed to the specific structure, material, or acts that perform the function. See also *Caterpillar Inc. v. Detroit Diesel Corp.*, 41 USPQ2d 1876, 1882 (N.D. Ind. 1996) (35 U.S.C. 112, sixth paragraph "applies to functional method claims where the element at issue sets forth a step for reaching a particular result, but not the spe-

cific technique or procedure used to achieve the result."); *O.I. Corp.*, 115 F.3d at 1582-83, 42 USPQ2d at 1782 (With respect to process claims, "[35 U.S.C. 112, sixth paragraph] is implicated only when steps *plus function* without acts are present...If we were to construe every process claim containing steps described by an 'ing' verb, such as passing, heating, reacting, transferring, etc., into a step-plus-function, we would be limiting process claims in a manner never intended by Congress." (Emphasis in original).). However, "the fact that a particular mechanism...is defined in functional terms is not sufficient to convert a claim element containing that term into a 'means for performing a specified function' within the meaning of section 112(6)." *Greenberg v. Ethicon Endo-Surgery, Inc.*, 91 F.3d 1580, 1583, 39 USPQ2d 1783, 1786 (Fed. Cir. 1996) ("detent mechanism" defined in functional terms was not intended to invoke 35 U.S.C. 112, sixth paragraph). See also *Al-Site Corp. v. VSI International Inc.*, 174 F.3d 1308, 1318, 50 USPQ2d 1161, 1166–67 (Fed. Cir. 1999) (although the claim elements "eyeglass hanger member" and "eyeglass contacting member" include a function, these claim elements do not invoke 35 U.S.C. 112, sixth paragraph because the claims themselves contain sufficient structural limitations for performing those functions). Also, a statement of function appearing only in the claim preamble is generally insufficient to invoke 35 U.S.C. 112, sixth paragraph. *O.I. Corp.*, 115 F.3d at 1583, 42 USPQ2d at 1782 ("[A] statement in a preamble of a result that necessarily follows from performing a series of steps does not convert each of those steps into step- plus-function clauses. The steps of 'passing' are not individually associated in the claims with functions performed by the steps of passing.").

With respect to the third prong of this analysis, see *Seal-Flex*, 172 F.3d at 849, 50 USPQ2d at 1234 (Radar, J., concurring) ("Even when a claim element uses language that generally falls under the step-plus-function format, however, 112 ¶ 6 still does not apply when the claim limitation itself recites sufficient acts for performing the specified function."); *Envirco Corp. v. Clestra Cleanroom, Inc.*, 209 F.3d 1360, 54 USPQ2d 1449 (Fed. Cir. 2000) (holding "second baffle means" does not invoke 35 U.S.C. 112, sixth paragraph, because the word "baffle" itself imparts structure and the claim further recites the structure of the baffle); *Rodime PLC v. Seagate Technology, Inc.*, 174 F.3d 1294, 1303–04, 50 USPQ2d 1429, 1435–36 (Fed. Cir. 1999) (holding "positioning means for moving" does not invoke 35 U.S.C. 112, sixth paragraph because the claim further provides a list of the structure underlying the means and the detailed recitation of the structure for performing the moving function removes this element from the purview of 35 U.S.C. 112, sixth paragraph); *Cole v. Kimberly-Clark Corp.*, 102 F.3d 524, 531, 41 USPQ2d 1001, 1006 (Fed. Cir. 1996) (holding "perforation means...for tearing" does not invoke 35 U.S.C. 112, sixth paragraph because the claim describes the structure supporting the tearing function (i.e., perforation)). In other cases, the Federal Circuit has held otherwise. See *Unidynamics Corp. v. Automatic Prod. Int'l*, 157 F.3d 1311, 1319, 48 USPQ2d 1099, 1104 (Fed. Cir. 1998) (holding "spring means" does invoke 35 U.S.C. 112, sixth paragraph). During examination, however, applicants have the opportunity and the obligation to define their inventions precisely, including whether a claim limitation invokes 35 U.S.C. 112, sixth paragraph. Thus, if the phrase "means for" or "step for" is modified by sufficient structure, material or acts for achieving the specified function, the USPTO will not apply 35 U.S.C. 112, sixth paragraph until such modifying language is deleted from the claim limitation.

It is necessary to decide on an element by element basis whether 35 U.S.C. 112, sixth paragraph applies. Not all terms in a means-plus-function or step-plus-function clause are limited to what is disclosed in the written description and equivalents thereof, since 35 U.S.C. 112, sixth paragraph applies only to the interpretation of the means or step that performs the recited function. See, e.g., *IMS Technology Inc. v. Haas Automation Inc.*, 206 F.3d 1422, 54 USPQ2d 1129 (Fed. Cir. 2000) (the term "data block" in the phrase "means to sequentially display data block inquiries" was not the means that caused the sequential display, and its meaning was not limited to the disclosed embodiment and equivalents thereof.). Each claim must be independently reviewed to determine the applicability of 35 U.S.C. 112, sixth paragraph, even where the application contains substantially similar process and apparatus claims. *O.I. Corp.*, 115 F.3d at 1583-1584, 42 USPQ2d at 1782 ("We understand that the steps in the method claims are essentially in

the same language as the limitations in the apparatus claim, albeit without the 'means for' qualification...Each claim must be independently reviewed in order to determine if it is subject to the requirements of section 112, ¶ 6. Interpretation of claims would be confusing indeed if claims that are not means- or step-plus function were to be interpreted as if they were, only because they use language similar to that used in other claims that are subject to this provision.").

Accordingly, these guidelines provide applicants with the opportunity to either invoke or not invoke 35 U.S.C. 112, sixth paragraph based upon a clear and simple set of criteria.

Limitations that fall within the scope of 35 U.S.C. 112, sixth paragraph include:

(A) a jet driving device so constructed and located on the rotor as to drive the rotor . . . ["means" unnecessary]. The term "device" coupled with a function is a proper definition of structure in accordance with the last paragraph of 35 U.S.C. 112. The addition of the words "jet driving" to the term "device" merely renders the latter more definite and specific. *Ex parte Stanley*, 121 USPQ 621 (Bd. App. 1958);

(B) "printing means" and "means for printing" which would have the same connotations. *Ex parte Klumb*, 159 USPQ 694 (Bd. App. 1967). However, the terms "plate" and "wing," as modifiers for the structureless term "means," specify no function to be performed, and do not fall under the last paragraph of 35 U.S.C. 112;

(C) force generating means adapted to provide . . . . *De Graffenreid v. United States*, 20 Ct. Cl. 458, 16 USPQ2d 1321 (Ct. Cl. 1990);

(D) call cost register means, including a digital display for providing a substantially instantaneous display for . . . . *Intellicall Inc. v. Phonometrics, Inc.*, 952 F.2d 1384, 21 USPQ2d 1383 (Fed. Cir. 1992);

(E) reducing the coefficient of friction of the resulting film [step plus function; "step" unnecessary], *In re Roberts*, 470 F.2d 1399, 176 USPQ 313 (CCPA 1973); and

(F) raising the pH of the resultant pulp to about 5.0 to precipitate . . . . *Ex parte Zimmerley*, 153 USPQ 367 (Bd. App. 1966).

In the event that it is unclear whether the claim limitation falls within the scope of 35 U.S.C. 112, sixth paragraph, a rejection under 35 U.S.C. 112, second paragraph may be appropriate.

PROCEDURES FOR DETERMINING WHETHER THE WRITTEN DESCRIPTION ADEQUATELY DESCRIBES THE CORRESPONDING STRUCTURE, MATERIAL, OR ACTS NECESSARY TO SUPPORT A CLAIM LIMITATION WHICH INVOKES 35 U.S.C. 112, SIXTH PARAGRAPH

If a claim limitation invokes 35 U.S.C. 112, sixth paragraph, it must be interpreted to cover the corresponding structure, materials, or acts in the specification and "equivalents thereof." See 35 U.S.C. 112, sixth paragraph. See also *B. Braun Medical, Inc. v. Abbott Lab.*, 124 F.3d 1419, 1424, 43 USPQ2d 1896, 1899 (Fed. Cir. 1997). If the written description fails to set forth the supporting structure, material or acts corresponding to the means- (or step-) plus-function, the claim may not meet the requirement of 35 U.S.C. 112, second paragraph:

> Although [35 U.S.C. 112, sixth paragraph] statutorily provides that one may use means-plus- function language in a claim, one is still subject to the requirement that a claim 'particularly point out and distinctly claim' the invention. Therefore, if one employs means-plus-function language in a claim, one must set forth in the specification an adequate disclosure showing what is meant by that language. If an applicant fails to set forth an adequate disclosure, the applicant has in effect failed to particularly point out and distinctly claim the invention as required by [35 U.S.C. 112, second paragraph].

Donaldson, 16 F.3d at 1195, 29 USPQ2d at 1850; see also *B. Braun Medical*, 124 F.3d at 1425, 43 USPQ2d at 1900; and *In re Dossel*, 115 F.3d 942, 946, 42 USPQ2d 1881, 1884–85 (Fed. Cir. 1997).

Whether a claim reciting an element in means- (or step-) plus-function language fails to comply with 35 U.S.C. 112, second paragraph because the specification does not disclose adequate structure (or material or acts) for performing the recited function is closely related to the question of whether the specification meets the description requirement in 35 U.S.C. 112, first paragraph. See *In re Noll*, 545 F.2d 141, 149, 191 USPQ 721, 727 (CCPA 1976) (unless the means-plus-function language is itself unclear, a claim limitation written in means-plus- function language meets the definiteness requirement in 35 U.S.C. 112, second paragraph so long as the specification meets the writ-

ten description requirement in 35 U.S.C. 112, first paragraph). However, 35 U.S.C. 112, sixth paragraph does not impose any requirements in addition to those imposed by 35 U.S.C. 112, first paragraph. See *In re Knowlton*, 481 F.2d 1357, 1366, 178 USPQ 486, 492–93 (CCPA 1973). Conversely, the invocation of 35 U.S.C. 112, sixth paragraph does not exempt an applicant from compliance with 35 U.S.C. 112, first and second paragraphs. See *Donaldson*, 16 F.3d at 1195, 29 USPQ2d at 1850; *Knowlton*, 481 F.2d at 1366, 178 USPQ at 493.

Under certain limited circumstances, the written description does not have to explicitly describe the structure (or material or acts) corresponding to a means- (or step-) plus-function limitation to particularly point out and distinctly claim the invention as required by 35 U.S.C. 112, second paragraph. See *Dossel*, 115 F.3d at 946, 42 USPQ2d at 1885. Under proper circumstances, drawings may provide a written description of an invention as required by 35 U.S.C. 112. *Vas-Cath, Inc. v. Mahurkar*, 935 F.2d 1555, 1565, 19 USPQ2d 1111, 1118 (Fed. Cir. 1991). Rather, disclosure of structure corresponding to a means-plus-function limitation may be implicit in the written description if it would have been clear to those skilled in the art what structure must perform the function recited in the means-plus-function limitation. See *Atmel Corp. v. Information Storage Devices Inc.*, 198 F.3d 1374, 1379, 53 USPQ2d 1225, 1228 (Fed. Cir. 1999) (stating that the "one skilled in the art" analysis should apply in determining whether sufficient structure has been disclosed to support a means-plus-function limitation and that the USPTO's recently issued proposed Supplemental Guidelines are consistent with the court's holding on this point); *Dossel*, 115 F.3d at 946–47, 42 USPQ2d at 1885 ("Clearly, a unit which receives digital data, performs complex mathematical computations and outputs the results to a display must be implemented by or on a general or special purpose computer (although it is not clear why the written description does not simply state 'computer' or some equivalent phrase.)"). However, the claims must still be analyzed to determine whether there exists corresponding adequate support for such claim under 35 U.S.C. 112, first paragraph. In considering whether there is 35 U.S.C. 112, first paragraph support for the claim limitation, the examiner must consider not only the original disclosure contained in the summary and detailed description of the invention portions of the specification, but also the original claims, abstract, and drawings. See *In re Mott*, 539 F.2d 1291, 1299, 190 USPQ 536, 542–43 (CCPA 1976) (claims); *In re Anderson*, 471 F.2d 1237, 1240, 176 USPQ 331, 333 (CCPA 1973) (claims); *Hill-Rom Co. v. Kinetic Concepts, Inc.*, 243 F.3d 560, 54 USPQ2d 1437 (Fed. Cir. 2000) (unpublished) (abstract); *In re Armbruster*, 512 F.2d 676, 678–79, 185 USPQ 152, 153–54 (CCPA 1975) (abstract); *Anderson*, 471 F.2d at 1240, 176 USPQ at 333 (abstract); *Vas-Cath Inc. v. Mahurkar*, 935 F.2d at 1564, 19 USPQ2d at 1117 (drawings); *In re Wolfensperger*, 302 F.2d 950, 955–57, 133 USPQ 537, 541–43 (CCPA 1962) (drawings).

Therefore, a means-(or step-) plus-function claim limitation satisfies 35 U.S.C. 112, second paragraph if: (A) the written description links or associates particular structure, materials, or acts to the function recited in a means- (or step-) plus-function claim limitation; or (B) it is clear based on the disclosure in the application that one skilled in the art would have known what structure, materials, or acts perform the function recited in a means- (or step-) plus-function limitation.

37 CFR 1.75(d)(1) provides, in part, that "the terms and phrases used in the claims must find clear support or antecedent basis in the description so that the meaning of the terms in the claims may be ascertainable by reference to the description." In the situation in which the written description only implicitly or inherently sets forth the structure, materials, or acts corresponding to a means- (or step-) plus-function, and the examiner concludes that one skilled in the art would recognize what structure, materials, or acts perform the function recited in a means- (or step-) plus-function, the examiner should either: (A) have the applicant clarify the record by amending the written description such that it expressly recites what structure, materials, or acts perform the function recited in the claim element; or (B) state on the record what structure, materials, or acts perform the function recited in the means- (or step-) plus-function limitation. Even if the disclosure implicitly sets forth the structure, materials, or acts corresponding to a means- (or step-) plus-function claim element in compliance with 35 U.S.C. 112, first and second paragraphs, the USPTO may still require the applicant to amend the

specification pursuant to 37 CFR 1.75(d) and MPEP § 608.01(o) to explicitly state, with reference to the terms and phrases of the claim element, what structure, materials, or acts perform the function recited in the claim element. See 35 U.S.C. 112, sixth paragraph ("An element in a claim for a combination may be expressed as a means or step for performing a specified function without the recital of structure, material, or acts in support thereof, and such claim shall be construed to cover the corresponding structure, material, or acts described in the specification and equivalents thereof." (emphasis added)); see also *B. Braun Medical*, 124 F.3d at 1424, 43 USPQ2d at 1900 (holding that "pursuant to this provision [35 U.S.C. 112, sixth paragraph], structure disclosed in the specification is 'corresponding' structure only if the specification or prosecution history clearly links or associates that structure to the function recited in the claim. This duty to link or associate structure to function is the *quid pro quo* for the convenience of employing 112, paragraph 6."); *Wolfensperger*, 302 F.2d at 955, 133 USPQ at 542 (just because the disclosure provides support for a claim element does not mean that the USPTO cannot enforce its requirement that the terms and phrases used in the claims find clear support or antecedent basis in the written description).

SINGLE MEANS CLAIMS

Donaldson does not affect the holding of *In re Hyatt*, 708 F.2d 712, 218 USPQ 195 (Fed. Cir. 1983) to the effect that a single means claim does not comply with the enablement requirement of 35 U.S.C. 112, first paragraph. As *Donaldson* applies only to an interpretation of a limitation drafted to correspond to 35 U.S.C. 112, sixth paragraph, which by its terms is limited to "an element in a claim to a combination," it does not affect a limitation in a claim which is not directed to a combination.

2182 Scope of the Search and Identification of the Prior Art

As noted in MPEP § 2181, in *In re Donaldson Co.*, 16 F.3d 1189, 29 USPQ2d 1845 (Fed. Cir. 1994) the Federal Circuit recognized that it is important to retain the principle that claim language should be given its broadest reasonable interpretation. This principle is important because it helps insure that the statutory presumption of validity attributed to each claim of an issued patent is warranted by the search and examination conducted by the examiner. It is also important from the standpoint that the scope of protection afforded by patents issued prior to *Donaldson* are not unnecessarily limited by the latest interpretation of this statutory provision. Finally, it is important from the standpoint of avoiding the necessity for a patent specification to become a catalogue of existing technology. The specification need not describe the equivalents of the structures, material, or acts corresponding to the means- (or step-) plus-function claim element. See *In re Noll*, 545 F.2d 141, 149-50, 191 USPQ 721, 727 (CCPA 1976) ("The meaning of 'equivalents' is well understood in patent law, ... and an applicant need not describe in his specification the full range of equivalents of his invention.") (citation omitted). A patent specification need not teach, and preferably omits, what is well known in the art. *Hybritech Inc. v. Monoclonal Antibodies, Inc.*, 802 F.2d 1367, 1384, 231 USPQ 81, 94 (Fed. Cir. 1986).

The *Donaldson* decision thus does not substantially alter examining practice and procedure relative to the scope of the search. Both before and after *Donaldson*, the application of a prior art reference to a means or step plus function limitation requires that the prior art element perform the identical function specified in the claim. However, if a prior art reference teaches identity of function to that specified in a claim, then under *Donaldson* an examiner carries the initial burden of proof for showing that the prior art structure or step is the same as or equivalent to the structure, material, or acts described in the specification which has been identified as corresponding to the claimed means or step plus function.

The "means or step plus function" limitation should be interpreted in a manner consistent with the specification disclosure. If the specification defines what is meant by the limitation for the purposes of the claimed invention, the examiner should interpret the limitation as having that meaning. If no definition is provided, some judgment must be exercised in determining the scope of the limitation. See, e.g., *B. Braun Medical, Inc. v. Abbott Labs.*, 124 F.3d 1419, 1424, 43 USPQ2d 1896, 1900 (Fed. Cir. 1997) ("We hold that, pursuant to [35 U.S.C. 112, sixth paragraph], structure disclosed in the specification is 'corresponding' structure only if the specification or prosecution history clearly links or associates that structure to the func-

tion recited in the claim. This duty to link or associate structure to function is the *quid pro quo* for the convenience of employing 112, paragraph 6." The court refused to interpret a means-plus-function limitation as corresponding to a disclosed valve seat structure, as argued by patentee, since there was no indication in the specification or prosecution history that this structure corresponds to the recited function, and there was an explicitly clear association between that function and a traverse cross section bar structure disclosed in the specification.).

2183 Making a *Prima Facie* Case of Equivalence

If the examiner finds that a prior art element

(A) performs the function specified in the claim,

(B) is not excluded by any explicit definition provided in the specification for an equivalent, and

(C) is an equivalent of the means- (or step-) plus-function limitation,

the examiner should provide an explanation and rationale in the Office action as to why the prior art element is an equivalent. Factors that will support a conclusion that the prior art element is an equivalent are:

(A) the prior art element performs the identical function specified in the claim in substantially the same way, and produces substantially the same results as the corresponding element disclosed in the specification. *Kemco Sales, Inc. v. Control Papers Co.*, 208 F.3d 1352, 54 USPQ2d 1308 (Fed. Cir. 2000) (An internal adhesive sealing the inner surfaces of an envelope pocket was not held to be equivalent to an adhesive on a flap which attached to the outside of the pocket. Both the claimed invention and the accused device performed the same function of closing the envelope. But the accused device performed it in a substantially different way (by an internal adhesive on the inside of the pocket) with a substantially different result (the adhesive attached the inner surfaces of both sides of the pocket)); *Odetics Inc. v. Storage Tech. Corp.*, 185 F.3d 1259, 1267, 51 USPQ2d 1225, 1229-30 (Fed. Cir. 1999); *Lockheed Aircraft Corp. v. United States*, 193 USPQ 449, 461 (Ct. Cl. 1977). The concepts of equivalents as set forth in *Graver Tank & Mfg. Co. v. Linde Air Products*, 339 U.S. 605, 85 USPQ 328 (1950) are relevant to any "equivalents " determination. *Polumbo v. Don-Joy Co.*, 762 F.2d 969, 975 n.4, 226 USPQ 5, 8-9 n.4 (Fed. Cir. 1985).

(B) a person of ordinary skill in the art would have recognized the interchangeability of the element shown in the prior art for the corresponding element disclosed in the specification. *Caterpillar Inc. v. Deere & Co.*, 224 F.3d 1374, 56 USPQ2d 1305 (Fed. Cir. 2000); *Al-Site Corp. v. VSI Int' l, Inc.*, 174 F.3d 1308, 1316, 50 USPQ2d 1161, 1165 (Fed. Cir. 1999); *Chiuminatta Concrete Concepts, Inc. v. Cardinal Indus. Inc.*, 145 F.3d 1303, 1309, 46 USPQ2d 1752, 1757 (Fed. Cir. 1998); *Lockheed Aircraft Corp. v. United States,* 193 USPQ 449, 461 (Ct. Cl. 1977); *Data Line Corp. v. Micro Technologies, Inc.*, 813 F.2d 1196, 1 USPQ2d 2052 (Fed. Cir. 1987).

(C) there are insubstantial differences between the prior art element and the corresponding element disclosed in the specification. *IMS Technology, Inc. v. Haas Automation, Inc.*, 206 F.3d 1422, 1436, 54 USPQ2d 1129, 1138 (Fed. Cir. 2000); *Warner-Jenkinson Co. v. Hilton Davis Chemical Co.*, 117 S. Ct. 1040, 41 USPQ2d 1865, 1875 (1997); *Valmont Industries, Inc. v. Reinke Mfg. Co.*, 983 F.2d 1039, 25 USPQ2d 1451 (Fed. Cir. 1993). See also *Caterpillar Inc. v. Deere & Co.*, 224 F.3d 1374, 56 USPQ2d 1305 (Fed. Cir. 2000) (A structure lacking several components of the overall structure corresponding to the claimed function and also differing in the number and size of the parts may be insubstantially different from the disclosed structure. The limitation in a means-plus-function claim is the overall structure corresponding to the claimed function. The individual components of an overall structure that corresponds to the claimed function are not claim limitations. Also, potential advantages of a structure that do not relate to the claimed function should not be considered in an equivalents determination under 35 U.S.C. 112, sixth paragraph).

(D) the prior art element is a structural equivalent of the corresponding element disclosed in the specification. *In re Bond*, 910 F.2d 831, 15 USPQ2d 1566 (Fed. Cir. 1990). That is, the prior art element performs the function specified in the claim in substantially the same manner as the function is performed by the corresponding element described in the specification.

A showing of at least one of the above-noted factors by the examiner should be sufficient to support a conclusion that the prior art element is an equivalent. The examiner should then conclude that the claimed limitation is met by the prior art element. In addition to the conclusion that the prior art element is an equivalent, examiners should also demonstrate, where appropriate, why it would have been obvious to one of ordinary skill in the art at the time of the invention to substitute applicant's described structure, material, or acts for that described in the prior art reference. See *In re Brown*, 459 F.2d 531, 535, 173 USPQ 685, 688 (CCPA 1972). The burden then shifts to applicant to show that the element shown in the prior art is not an equivalent of the structure, material or acts disclosed in the application. *In re Mulder*, 716 F.2d 1542, 219 USPQ 189 (Fed. Cir. 1983). No further analysis of equivalents is required of the examiner until applicant disagrees with the examiner's conclusion, and provides reasons why the prior art element should not be considered an equivalent. See also, *In re Walter*, 618 F.2d 758, 768, 205 USPQ 397, 407-08 (CCPA 1980) (a case treating 35 U.S.C. 112, sixth paragraph, in the context of a determination of statutory subject matter and noting "If the functionally-defined disclosed means and their equivalents are so broad that they encompass any and every means for performing the recited functions . . . the burden must be placed on the applicant to demonstrate that the claims are truly drawn to specific apparatus distinct from other apparatus capable of performing the identical functions"); *In re Swinehart*, 439 F.2d 210, 212-13, 169 USPQ 226, 229 (CCPA 1971) (a case in which the court treated as improper a rejection under 35 U.S.C. 112, second paragraph, of functional language, but noted that "where the Patent Office has reason to believe that a functional limitation asserted to be critical for establishing novelty in the claimed subject matter may, in fact, be an inherent characteristic of the prior art, it possesses the authority to require the applicant to prove that the subject matter shown to be in the prior art does not possess the characteristics relied on"); and *In re Fitzgerald*, 619 F.2d 67, 205 USPQ 594 (CCPA 1980) (a case indicating that the burden of proof can be shifted to the applicant to show that the subject matter of the prior art does not possess the characteristic relied on whether the rejection is based on inherency under 35 U.S.C. 102 or obviousness under 35 U.S.C. 103).

See MPEP § 2184 when determining whether the applicant has successfully met the burden of proving that the prior art element is not equivalent to the structure, material or acts described in the applicant's specification.

IF NONEQUIVALENCE SHOWN, EXAMINER MUST CONSIDER OBVIOUSNESS

However, even where the applicant has met that burden of proof and has shown that the prior art element is not equivalent to the structure, material or acts described in the applicant's specification, the examiner must still make a 35 U.S.C. 103 analysis to determine if the claimed means or step plus function is obvious from the prior art to one of ordinary skill in the art. Thus, while a finding of nonequivalence prevents a prior art element from anticipating a means or step plus function limitation in a claim, it does not prevent the prior art element from rendering the claim limitation obvious to one of ordinary skill in the art. Because the exact scope of an "equivalent" may be uncertain, it would be appropriate to apply a 35 U.S.C. 102/103 rejection where the balance of the claim limitations are anticipated by the prior art relied on. A similar approach is authorized in the case of product-by-process claims because the exact identity of the claimed product or the prior art product cannot be determined by the examiner. *In re Brown*, 450 F.2d 531, 173 USPQ 685 (CCPA 1972). In addition, although it is normally the best practice to rely on only the best prior art references in rejecting a claim, alternative grounds of rejection may be appropriate where the prior art shows elements that are different from each other, and different from the specific structure, material or acts described in the specification, yet perform the function specified in the claim.

2184 Determining Whether an Applicant Has Met the Burden of Proving Nonequivalence After a *Prima Facie* Case Is Made

The specification need not describe the equivalents of the structures, material, or acts corresponding to the means-(or step-) plus-function claim element. See *In re Noll*, 545 F.2d 141, 149-50, 191 USPQ 721, 727

(CCPA 1976) (the meaning of equivalents is well understood in patent law, and an applicant need not describe in his specification the full range of equivalents of his invention) (citation omitted). *Cf. Hybritech Inc. v. Monoclonal Antibodies, Inc.*, 802 F.2d 1367, 1384, 231 USPQ 81, 94 (Fed. Cir. 1986) ("a patent need not teach, and preferably omits, what is well known in the art"). Where, however, the specification is silent as to what constitutes equivalents and the examiner has made out a *prima facie* case of equivalence, the burden is placed upon the applicant to show that a prior art element which performs the claimed function is not an equivalent of the structure, material, or acts disclosed in the specification. See *In re Mulder*, 716 F.2d 1542, 1549, 219 USPQ 189, 196 (Fed. Cir. 1983).

If the applicant disagrees with the inference of equivalence drawn from a prior art reference, the applicant may provide reasons why the applicant believes the prior art element should not be considered an equivalent to the specific structure, material or acts disclosed in the specification. Such reasons may include, but are not limited to:

(A) Teachings in the specification that particular prior art is not equivalent;

(B) Teachings in the prior art reference itself that may tend to show nonequivalence; or

(C) 37 CFR 1.132 affidavit evidence of facts tending to show nonequivalence.

TEACHINGS IN APPLICANT'S SPECIFICATION

When the applicant relies on teachings in applicant's own specification, the examiner must make sure that the applicant is interpreting the "means or step plus function" limitation in the claim in a manner which is consistent with the disclosure in the specification. If the specification defines what is meant by "equivalents" to the disclosed embodiments for the purpose of the claimed means or step plus function, the examiner should interpret the limitation as having that meaning. If no definition is provided, some judgment must be exercised in determining the scope of "equivalents." Generally, an "equivalent" is interpreted as embracing more than the specific elements described in the specification for performing the specified function, but less than any element that performs the function specified in the claim. To interpret "means plus function" limitations as limited to a particular means set forth in the specification would nullify the provisions of 35 U.S.C. 112 requiring that the limitation shall be construed to cover the structure described in the specification and equivalents thereof. *D.M.I., Inc. v. Deere & Co.*, 755 F.2d 1570, 1574, 225 USPQ 236, 238 (Fed. Cir. 1985).

The scope of equivalents embraced by a claim limitation is dependent on the interpretation of an "equivalent." The interpretation will vary depending on how the element is described in the supporting specification. The claim may or may not be limited to particular structure, material or acts (e.g., steps) as opposed to any and all structure, material or acts performing the claimed function, depending on how the specification treats that question. See, e.g., *Ishida Co. v. Taylor*, 221 F.3d 1310, 55 USPQ2d 1449 (Fed. Cir. 2000) (The court construed the scope of a means-plus-function claim element where the specification disclosed two structurally very different embodiments for performing the claimed function by looking separately to each embodiment to determine corresponding structures. The court declined to adopt a single claim construction encompassing both embodiments since it would be so broad as to describe systems both with and without the fundamental structural features of each embodiment.).

If the disclosure is so broad as to encompass any and all structure, material or acts for performing the claimed function, the claims must be read accordingly when determining patentability. When this happens the limitation otherwise provided by "equivalents" ceases to be a limitation on the scope of the claim in that an equivalent would be any structure, material or act other than the ones described in the specification that perform the claimed function. For example, this situation will often be found in cases where (A) the claimed invention is a combination of elements, one or more of which are selected from elements that are old, *per se*, or (B) apparatus claims are treated as indistinguishable from method claims. See, for example, *In re Meyer*, 688 F.2d 789, 215 USPQ 193 (CCPA 1982); *In re Abele*, 684 F.2d 902, 909, 214 USPQ 682, 688 (CCPA 1982); *In re Walter*, 618 F.2d 758, 767, 205 USPQ 397, 406-07 (CCPA 1980); *In re Maucorps*, 609 F.2d 481, 203 USPQ 812 (CCPA 1979); *In re Johnson*, 589 F.2d 1070, 200 USPQ 199 (CCPA

1978); and *In re Freeman*, 573 F.2d 1237, 1246, 197 USPQ 464, 471 (CCPA 1978).

On the other end of the spectrum, the "equivalents" limitation as applied to a claim may also operate to constrict the claim scope to the point of covering virtually only the disclosed embodiments. This can happen in circumstances where the specification describes the invention only in the context of a specific structure, material or act that is used to perform the function specified in the claim.

FACTORS TO BE CONSIDERED IN DECIDING EQUIVALENCE

When deciding whether an applicant has met the burden of proof with respect to showing nonequivalence of a prior art element that performs the claimed function, the following factors may be considered. First, unless an element performs the identical function specified in the claim, it cannot be an equivalent for the purposes of 35 U.S.C. 112, sixth paragraph. *Pennwalt Corp. v. Durand-Wayland, Inc.*, 833 F.2d 931, 4 USPQ2d 1737 (Fed. Cir. 1987), *cert. denied*, 484 U.S. 961 (1988).

Second, while there is no litmus test for an "equivalent" that can be applied with absolute certainty and predictability, there are several indicia that are sufficient to support a conclusion that one element is or is not an "equivalent" of a different element in the context of 35 U.S.C. 112, sixth paragraph. Among the indicia that will support a conclusion that one element is or is not an equivalent of another are:

(A) Whether the prior art element performs the identical function specified in the claim in substantially the same way, and produces substantially the same results as the corresponding element disclosed in the specification. *Kemco Sales, Inc. v. Control Papers Co.*, 208 F.3d 1352, 54 USPQ2d 1308 (Fed. Cir. 2000) (An internal adhesive sealing the inner surfaces of an envelope pocket was not held to be equivalent to an adhesive on a flap which attached to the outside of the pocket. Both the claimed invention and the accused device performed the same function of closing the envelope. But the accused device performed it in a substantially different way (by an internal adhesive on the inside of the pocket) with a substantially different result (the adhesive attached the inner surfaces of both sides of the pocket)); *Odetics Inc. v. Storage Tech. Corp.*, 185 F.3d 1259, 1267, 51 USPQ2d 1225, 1229-30 (Fed. Cir. 1999); *Lockheed Aircraft Corp. v. United States*, 193 USPQ 449, 461 (Ct. Cl. 1977). The concepts of equivalents as set forth in *Graver Tank & Mfg. Co. v. Linde Air Products*, 339 U.S. 605, 85 USPQ 328 (1950) are relevant to any "equivalents " determination. *Polumbo v. Don-Joy Co.*, 762 F.2d 969, 975, n. 4, 226 USPQ 5, 8-9, n. 4 (Fed. Cir. 1985).

(B) Whether a person of ordinary skill in the art would have recognized the interchangeability of the element shown in the prior art for the corresponding element disclosed in the specification. *Caterpillar Inc. v. Deere & Co.*, 224 F.3d 1374, 56 USPQ2d 1305 (Fed. Cir. 2000); *Al-Site Corp. v. VSI Int' l, Inc.*, 174 F.3d 1308, 1316, 50 USPQ2d 1161, 1165 (Fed. Cir. 1999); *Chiuminatta Concrete Concepts, Inc. v. Cardinal Indus. Inc.*, 145 F.3d 1303, 1309, 46 USPQ2d 1752, 1757 (Fed. Cir. 1998); *Lockheed Aircraft Corp. v. United States*, 193 USPQ 449, 461 (Ct. Cl. 1977); *Data Line Corp. v. Micro Technologies, Inc.*, 813 F.2d 1196, 1 USPQ2d 2052 (Fed. Cir. 1987).

(C) Whether there are insubstantial differences between the prior art element and the corresponding element disclosed in the specification. *IMS Technology, Inc. v. Haas Automation, Inc.*, 206 F.3d 1422, 1436, 54 USPQ2d 1129, 1138 (Fed. Cir. 2000); *Warner-Jenkinson Co. v. Hilton Davis Chemical Co.*, 117 S. Ct. 1040, 41 USPQ2d 1865, 1875 (1997); *Valmont Industries, Inc. v. Reinke Mfg. Co.*, 983 F.2d 1039, 25 USPQ2d 1451 (Fed. Cir. 1993). See also *Caterpillar Inc. v. Deere & Co.*, 224 F.3d 1374, 56 USPQ2d 1305 (Fed. Cir. 2000) (A structure lacking several components of the overall structure corresponding to the claimed function and also differing in the number and size of the parts may be insubstantially different from the disclosed structure. The limitation in a means-plus-function claim is the overall structure corresponding to the claimed function. The individual components of an overall structure that corresponds to the claimed function are not claim limitations. Also, potential advantages of a structure that do not relate to the claimed function should not be considered in an equivalents determination under 35 U.S.C. 112, sixth paragraph).

(D) Whether the prior art element is a structural equivalent of the corresponding element disclosed in the specification. *In re Bond*, 910 F.2d 831, 15 USPQ2d 1566 (Fed. Cir. 1990). That is, the prior

art element performs the function specified in the claim in substantially the same manner as the function is performed by the corresponding element described in the specification.

These examples are not intended to be an exhaustive list of the indicia that would support a finding that one element is or is not an equivalent of another element for the purposes of 35 U.S.C. 112, sixth paragraph. A finding according to any of the above examples would represent a sufficient, but not the only possible, basis to support a conclusion that an element is or is not an equivalent. There could be other indicia that also would support the conclusion.

MERE ALLEGATIONS OF NONEQUIVALENCE ARE NOT SUFFICIENT

In determining whether arguments or 37 CFR 1.132 evidence presented by an applicant are persuasive that the element shown in the prior art is not an equivalent, the examiner should consider and weigh as many of the above-indicated or other indicia as are presented by applicant, and should determine whether, on balance, the applicant has met the burden of proof to show nonequivalence. However, under no circumstance should an examiner accept as persuasive a bare statement or opinion that the element shown in the prior art is not an equivalent embraced by the claim limitation. Moreover, if an applicant argues that the "means" or "step" plus function language in a claim is limited to certain specific structural or additional functional characteristics (as opposed to "equivalents" thereof) where the specification does not describe the invention as being only those specific characteristics, the claim should not be allowed until the claim is amended to recite those specific structural or additional functional characteristics. Otherwise, a claim could be allowed having broad functional language which, in reality, is limited to only the specific structure or steps disclosed in the specification. This would be contrary to public policy of granting patents which provide adequate notice to the public as to a claim's true scope.

APPLICANT MAY AMEND CLAIMS

Finally, as in the past, applicant has the opportunity during proceedings before the Office to amend the claims so that the claimed invention meets all the statutory criteria for patentability. An applicant may choose to amend the claim by further limiting the function so that there is no longer identity of function with that taught by the prior art element, or the applicant may choose to replace the claimed means plus function limitation with specific structure, material or acts that are not described in the prior art.

2185 Related Issues Under 35 U.S.C. 112, First or Second Paragraphs

Interpretation of claims as set forth in MPEP § 2181 may create some uncertainty as to what applicant regards as the invention. If this issue arises, it should be addressed in a rejection under 35 U.S.C. 112, second paragraph. While 35 U.S.C. 112, sixth paragraph permits a particular form of claim limitation, it cannot be read as creating an exception either to the description, enablement or best mode requirements of the first paragraph or the definiteness requirement of the second paragraph of 35 U.S.C. 112. *In re Knowlton*, 481 F.2d 1357, 178 USPQ 486 (CCPA 1973).

If a "means or step plus function" limitation recited in a claim is not supported by corresponding structure, material or acts in the specification disclosure, the following rejections should be considered:

(A) under 35 U.S.C. 112, first paragraph, as not being supported by an enabling disclosure because the person skilled in the art would not know how to make and use the invention without a description of elements to perform the function. The description of an apparatus with block diagrams describing the function, but not the structure, of the apparatus is not fatal under the enablement requirement of 35 U.S.C. 112, first paragraph, as long as the structure is conventional and can be determined without an undue amount of experimentation. *In re Ghiron*, 442 F.2d 985, 991, 169 USPQ 723, 727 (CCPA 1971);

(B) under 35 U.S.C. 112, second paragraph, as being indefinite. *In re Dossel*, 115 F.3d 942, 946, 42 USPQ2d 1881, 1884 (Fed. Cir. 1997); and

(C) under 35 U.S.C. 102 or 103 where the prior art anticipates or renders obvious the claimed subject matter including the means or step that performs the function specified in the claim, the theory being that since there is no corresponding structure, etc., in the specification to limit the means or step plus function

limitation, an equivalent is any element that performs the specified function.

2186 Relationship to the Doctrine of Equivalents

The doctrine of equivalents arises in the context of an infringement action. If an accused product or process does not literally infringe a patented invention, the accused product or process may be found to infringe under the doctrine of equivalents. The essential objective inquiry is: "Does the accused product or process contain elements identical or equivalent to each claimed element of the patented invention?" *Warner-Jenkinson Co. v. Hilton Davis Chemical Co.*, 117 S. Ct. 1040, 41 USPQ2d 1865, 1875 (1997). In determining equivalence, "[a]n analysis of the role played by each element in the context of the specific patent claim will thus inform the inquiry as to whether a substitute element matches the function, way, and result of the claimed element, or whether the substitute plays a role substantially different from the claimed element." 41 USPQ2d at 1875.

35 U.S.C. 112, sixth paragraph permits "means or step plus function" limitations in claims to combinations, "with the proviso that application of the broad literal language of such claims must be limited to only those means that are 'equivalent' to the actual means shown in the patent specification. This is an application of the doctrine of equivalents in a restrictive role, narrowing the application of broad literal claim elements." 41 USPQ2d at 1870. Accordingly, decisions involving the doctrine of equivalents should be considered, but should not unduly influence a determination under 35 U.S.C. 112, sixth paragraph during *ex parte* examination.

●●●●●●●●●●●●●●●●●●●●●●●●●●●●●●

Chapter 2200 Citation of Prior Art and Ex Parte Reexamination of Patents

2201 Introduction
2202 Citation of Prior Art
2203 Persons Who May Cite Prior Art
2204 Time for Filing Prior Art Citation
2205 Content of Prior Art Citation
2206 Handling of Prior Art Citation
2207 Entry of Court Decision in Patent File
2208 Service of Citation on Patent Owner
2209 Reexamination
2210 Request for Reexamination
2211 Time for Requesting Examinations
2212 Persons Who May File a Request
2213 Representative of Requester
2214 Content of Request
2215 Fee for Requesting Reexamination
2216 Substantial New Question of Patentability
2217 Statement in the Request Applying Prior Art
2218 Copies of Prior Art
2219 Copy of Printed Patent
2220 Certificate of Service
2221 Amendments Included in Request by Patent Owner
2222 Address of Patent Owner
2223 Withdrawal of Attorney or Agent
2224 Correspondence
2225 Untimely Paper Filed Prior to Order
2226 Initial Processing of Request
2227 Incomplete Request
2228 Informal Request
2229 Notice of Request in *Official Gazette*
2230 Constructive Notice to Patent Owner
2231 Processing of Request Corrections
2232 Public Access
2233 Processing in Technology Center
2234 Entry of Amendments
2235 Record Systems
2236 Assignment of Reexamination
2237 Transfer Procedure
2238 Time Reporting
2239 Reexamination Ordered at the Commissioner's Initiative
2240 Decision on Request
2241 Time for Deciding Request
2242 Criteria for Deciding Request
2243 Claims Considered in Deciding Request
2244 Prior Art on Which the Determination Is Based
2245 Processing of Decision
2246 Decision Ordering Reexamination
2247 Decision on Request for Reexamination, Request Denied
2247.01 Examples of Decisions on Request for Reexamination
2248 Petition From Denial of Request
2249 Patent Owner's Statement
2250 Amendment by Patent Owner
2250.01 Correction of Patent Drawings
2250.02 Correction of Inventorship
2251 Reply by Third Party Requester
2252 Consideration of Statement and Reply
2253 Consideration by Examiner
2254 Conduct of Reexamination Proceedings
2255 Who Reexamines
2256 Prior Art Patents and Printed Publications Considered by Examiner in Reexamination
2257 Listing of Prior Art
2258 Scope of Reexamination
2259 Collateral Estoppel In Reexamination Proceedings
2260 Office Actions
2260.01 Dependent Claims
2261 Special Status For Action
2262 Form and Content of Office Action
2263 Time for Response
2264 Mailing of Office Action
2265 Extension of Time
2266 Responses
2266.01 Submission Not Fully Responsive to Non-final Office Action
2266.02 Examiner Issues Notice of Defective Paper in Reexamination
2266.03 Service of Papers
2267 Handling of Inappropriate or Untimely Filed Papers
2268 Petition for Entry of Late Papers
2269 Reconsideration
2270 Clerical Handling
2271 Final Action
2271.01 Patentability Review Conferences
2272 After Final Practice
2273 Appeal in Reexamination
2274 Appeal Brief
2275 Examiner's Answer
2276 Oral Hearing
2277 Board of Patent Appeals and Interferences Decision
2278 Action Following Decision
2279 Appeal to Courts
2280 Information Material to Patentability in Reexamination Proceeding
2281 Interviews in Reexamination Proceedings
2282 Notification of Existence of Prior or Concurrent Proceedings and Decisions Thereon

2283 Multiple Copending Reexamination Proceedings
2284 Copending Reexamination and Interference Proceedings
2285 Copending Reexamination and Reissue Proceedings
2286 Reeexamination and Litigation Proceedings
2287 Conclusion of Reexamination Proceeding
2288 Issuance of Reexamination Certificate
2289 Reexamination Review
2290 Format of Certificate
2291 Notice of Certificate Issuance in *Official Gazette*
2292 Distribution of Certificate
2293 Intervening Rights
2294 Terminated Reexamination Files
2295 Reexamination of a Reexamination
2296 USPTO Forms To Be Used

2201 Introduction

Statutory basis for citation of prior patents or printed publications in patent files and reexamination of patents became available on July 1, 1981, as a result of new sections 301-307 of title 35 United States Code which were added by Public Law 96-517 enacted on December 12, 1980. The rules of practice in patent cases relating to reexamination were initially promulgated on April 30, 1981, at 46 FR 24179-24180 and on May 29, 1981, at 46 FR 29176-29187.

This chapter is intended to be primarily a guide for U.S. Patent and Trademark Office (Office) personnel on the processing of prior art citations and *ex parte* reexamination requests. Secondarily, it is to also serve as a guide on the formal requirements for filing such documents in the Office.

The flowchart shows the general provisions of both the citation of prior art and *ex parte* reexamination proceedings, including reference to the pertinent rule sections.

On November 29, 1999, Public Law 106-113 was enacted, and expanded reexamination by providing an "*inter partes*" option. Public Law 106-113 authorized the extension of reexamination proceedings via an optional *inter partes* reexamination procedure in addition to the present *ex parte* reexamination as a means for improving the quality of United States patents. 35 U.S.C. 311 - 318 are directed to the optional *inter partes* reexamination procedures. The final rules to implement the optional *inter partes* reexamination were published in the *Federal Register* on December 7, 2000 at 65 FR 76756 and in the *Official Gazette* on January 2, 2001 at 1242 OG 12.

SUMMARY OF REEXAMINATION PROVISIONS

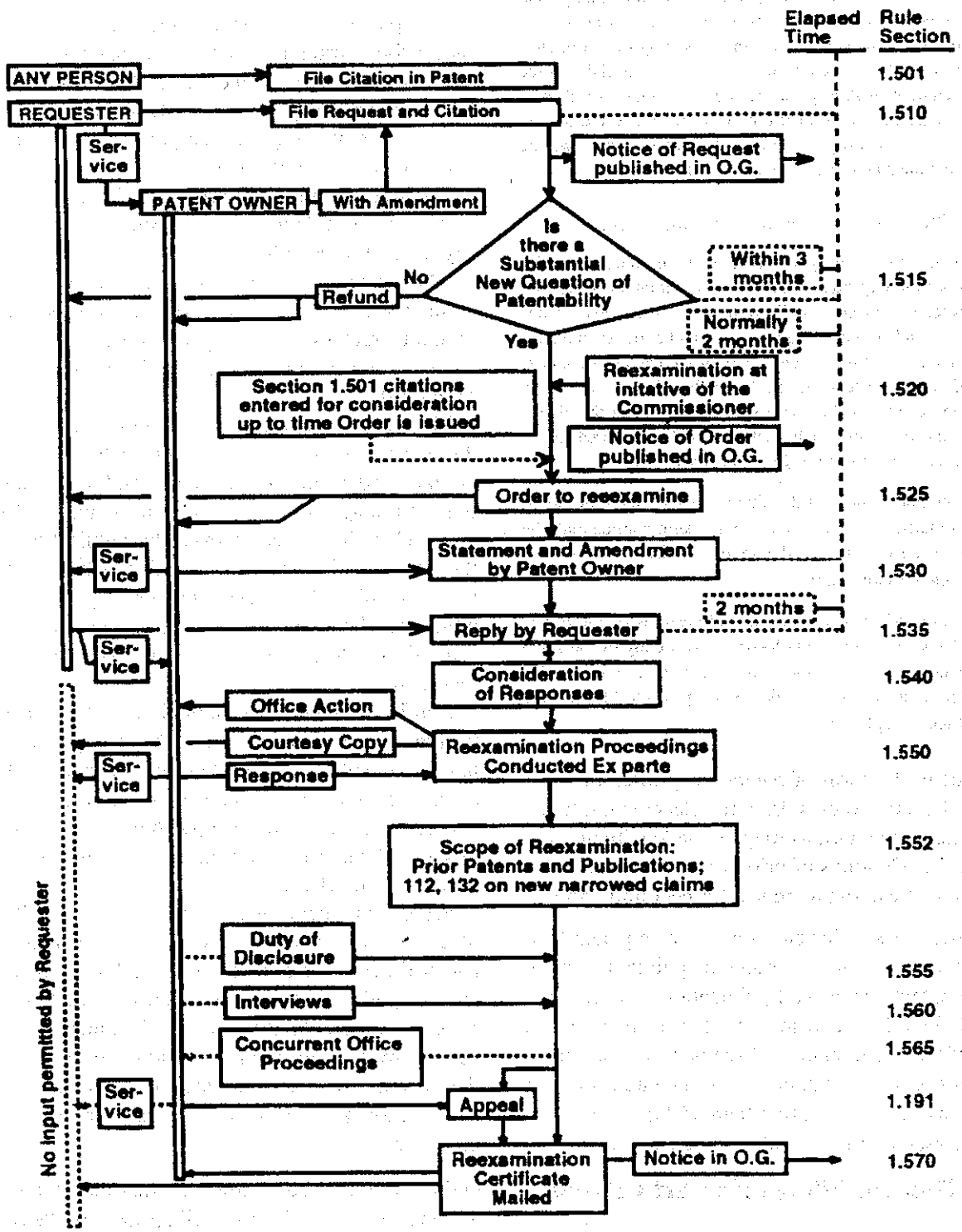

2202 Citation of Prior Art

35 U.S.C. 301. Citation of prior art.

Any person at any time may cite to the Office in writing prior art consisting of patents or printed publications which that person believes to have a bearing on the patentability of any claim of a particular patent. If the person explains in writing the pertinency and manner of applying such prior art to at least one claim of the patent, the citation of such prior art and the explanation thereof will become a part of the official file of the patent. At the written request of the person citing the prior art, his or her identity will be excluded from the patent file and kept confidential.

37 CFR 1.501. Citation of prior art in patent files.

(a) At any time during the period of enforceability of a patent, any person may cite, to the Office in writing, prior art consisting of patents or printed publications which that person states to be pertinent and applicable to the patent and believes to have a bearing on the patentability of any claim of the patent. If the citation is made by the patent owner, the explanation of pertinency and applicability may include an explanation of how the claims differ from the prior art. Such citations shall be entered in the patent file except as set forth in §§ 1.502 and 1.902.

(b) If the person making the citation wishes his or her identity to be excluded from the patent file and kept confidential, the citation papers must be submitted without any identification of the person making the submission.

(c) Citation of patents or printed publications by the public in patent files should either: (1) Reflect that a copy of the same has been mailed to the patent owner at the address as provided for in § 1.33(c); or in the event service is not possible (2) Be filed with the Office in duplicate.

Prior art in the form of patents or printed publications may be cited to the Office for placement into the patent files. Such citations may be made without payment of a fee. Citations of prior art may be made separate from and without a request for reexamination.

The basic purpose for citing prior art in patent files is to inform the patent owner and the public in general that such patents or printed publications are in existence and should be considered when evaluating the validity of the patent claims. Placement of citations in the patent file along with copies of the cited prior art will also ensure consideration thereof during any subsequent reissue or reexamination proceeding.

The citation of prior art provisions of 35 U.S.C. 301 and 37 CFR 1.501 do not apply to citations or protests filed in pending applications.

2203 Persons Who May Cite Prior Art

The patent owner, or any member of the public, may submit prior art citations of patents or printed publications to the Office. 35 U.S.C. 301 states that "Any person at any time may cite to the Office. . . ."

"Any person" may be a corporate or governmental entity as well as an individual.

If a person citing prior art desires his or her identity to be kept confidential, such a person need not identify himself or herself.

"Any person" includes patentees, licensees, reexamination requesters, real parties in interest, persons without a real interest, and persons acting for real parties in interest without a need to identify the real party of interest.

The statute indicates that "at the written request of the person citing the prior art, his or her identity will be excluded from the patent file and kept confidential". Although an attempt will be made to exclude any such written request from the public files, since the review will be mainly clerical in nature, complete assurance of such exclusion cannot be given. Persons citing art who desire to remain confidential are therefore advised to not identify themselves anywhere in their papers.

Confidential citations should include at least an unsigned statement indicating that the patent owner has been sent a copy of the citation papers. In the event that it is not possible to serve a copy on the patent owner, a duplicate copy should accompany the original of the prior art citation, when the original is filed with the Office.

Patent examiners should not, at their own initiative, place in a patent file or forward for placement in the patent file, any citations of prior art. Patent examiners are charged with the responsibility of making decisions as to patentability for the Commissioner. Any activity by examiners which would appear to indicate that patent claims are not patentable, outside of those cases pending before them, is considered to be inappropriate.

2204 Time for Filing Prior Art Citation

Citations of prior art may be filed "at any time" under 35 U.S.C. 301. However, this period has been defined by rule (37 CFR 1.501(a)) to be "any time during the period of enforceability of a patent." The

period of enforceability is the length of the term of the patent plus the 6 years under the statute of limitations for bringing an infringement action (35 U.S.C. 286). In addition, if litigation is instituted within the period of the statute of limitations, citations may be submitted after the statute of limitations has expired, as long as the patent is still enforceable against someone. While citations of prior art may be filed at any time during the period of enforceability of the patent, citations submitted after the date of any order to reexamine will not be entered into the patent file until the pending reexamination proceeding has been terminated (37 CFR 1.501(a)), unless the citations are submitted (1) by the patent owner, (2) by a reexamination requester who also submits the fee and other documents required under 37 CFR 1.510, or (3) in a third party requester's reply under 37 CFR 1.535, or as an enterable submission in an *inter partes* reexamination proceeding. To ensure that prior art cited by a third party is considered without the payment of another reexamination fee, it must be presented before reexamination is ordered.

The purpose of this rule is to prevent harassment of the patent owner due to frequent submissions of prior art citations during reexamination proceedings.

2205 Content of Prior Art Citation

The prior art which may be submitted under 35 U.S.C. 301 is limited to "written prior art consisting of patents or printed publications."

An explanation is required of how the person submitting the prior art considers it to be pertinent and applicable to the patent, as well as an explanation of why it is believed that the prior art has a bearing on the patentability of any claim of the patent. Citations of prior art by patent owners may also include an explanation of how the claims of the patent differ from the prior art cited.

It is preferred that copies of all the cited prior patents or printed publications and any necessary English translation be included so that the value of the citations may be readily determined by persons inspecting the patent files and by the examiner during any subsequent reissue or reexamination proceeding.

All prior art citations filed by persons other than the patent owner must either indicate that a copy of the citation has been mailed to, or otherwise served on, the patent owner at the correspondence address as defined under 37 CFR 1.33(c), or if for some reason service on the patent owner is not possible, a duplicate copy of the citation must be filed with the Office along with an explanation as to why the service was not possible. The most recent address of the attorney or agent of record may be obtained from the Office's register of registered patent attorneys and agents maintained by the Office of Enrollment and Discipline pursuant to 37 CFR 10.5 and 10.11(a).

All prior art citations submitted should identify the patent in which the citation is to be placed by the patent number, issue date, and patentee.

A cover sheet with an identification of the patent should have firmly attached to it all other documents relating to the citation so that the documents will not become separated during processing. The documents themselves should also contain, or have placed thereon, an identification of the patent for which they are intended.

Affidavits or declarations relating to the prior art documents submitted may accompany the citation to explain the contents or pertinent dates in more detail. A commercial success affidavit tied in with a particular prior art document may also be acceptable. For example, the patent owner may wish to cite a patent or printed publication which raises the issue of obviousness of at least one patent claim. Together with the cited art, the owner may file (a) an affidavit of commercial success or other evidence of nonobviousness, or (b) an affidavit which questions the enablement of the teachings of the cited prior art.

No fee is required for the submission of citations under 37 CFR 1.501.

A prior art citation is limited to the citation of patents and printed publications and an explanation of the pertinency and applicability of the patents and printed publications. This may include an explanation by the patent owner as to how the claims differ from the prior art. It may also include affidavits and declarations. The prior art citation cannot include any issue which is not directed to patents and printed publications. Thus, for example, a prior art citation cannot include a statement as to the claims violating 35 U.S.C. 112, a statement as to the public use of the claimed invention, or a statement as to the conduct of the patent owner. A prior art citation must be directed to patents and printed publications and cannot discuss what the patent owner did, or failed to do, with

respect to submitting and/or describing patents and printed publications, because that would be a statement as to the conduct of the patent owner. The citation also should not contain argument and discussion of references previously treated in the prosecution of the invention which matured into the patent or references previously treated in a reexamination proceeding as to the patent.

If the prior art citation contains any issue not directed to patents and printed publications, it should not be entered into the patent file, despite the fact that it may otherwise contain a complete submission of patents and printed publications with an explanation of the pertinency and applicability. Rather, the prior art citation should be returned to the sender as described in MPEP § 2206.

Examples of letters submitting prior art under 37 CFR 1.501 follow.

EXAMPLE I

Submission by a third party:

IN THE UNITED STATES
PATENT AND TRADEMARK OFFICE

In re patent of
Joseph Smith
Patent No. 9,999,999
Issued: July 7, 2000
For: Cutting Tool

Submission of Prior Art Under 37 CFR 1.501

Hon. Assistant Commissioner for Patents
Washington, D. C. 20231

Sir:

The undersigned herewith submits in the above identified patent the following prior art (including copies thereof) which is pertinent and applicable to the patent and is believed to have a bearing on the patentability of at least claims 1 - 3 thereof:

Weid et al U.S. 2,585,416 April 15, 1933
McGee U.S. 2, 722,794 May 1, 1934
Paulk et al U.S. 3,625,291 June 16, 1936

Each of the references discloses a cutting tool strikingly similar to the device of Smith in having pivotal handles with cutting blades and a pair of dies. It is believed that each of the references has a bearing on the patentability of claims 1-3 of the Smith patent.

Insofar as claims 1 and 2 are concerned, each of the references clearly anticipates the claimed subject matter under 35 U.S.C 102.

As to claim 3, the differences between the subject matter of this claim and the cutting tool of Weid et al are shown in the device of Paulk et al. Further, Weid et al suggests that different cutting blades can be used in their device. A person of ordinary skill in the art at the time the invention was made would have been led by the suggestion of Weid et al to the cutting blades of Paulk et al as obvious substitutes for the blades of Weid et al.

Respectfully submitted,
(Signed)

John Jones

Certificate of Service

I hereby certify on this first day of June 1982, that a true and correct copy of the foregoing "Submission of Prior Art" was mailed by first-class mail, postage paid, to:

Ben Schor
555 Any Lane
Anytown, VA 22202

(Signed)

John Jones

EXAMPLE II

Submission by the patent owner:

IN THE UNITED STATES
PATENT AND TRADEMARK OFFICE

In re patent of
Joseph Smith
Patent No. 9,999,999
Issued: July 7, 2000
For: Cutting Tool

Submission of Prior Art Under 37 CFR 1.501

Hon. Assistant Commissioner for Patents
Washington, D. C. 20231

Sir:

The undersigned herewith submits in the above identified patent the following prior art (including copies thereof) which is pertinent and applicable to the patent and is believed to have a bearing on the patentability of at least claims 1 - 3 thereof:

Weid et al U.S. 2,585,416 April 15, 1933
McGee U.S. 2, 722,794 May 1, 1934
Paulk et al U.S. 3,625,291 June 16, 1936

Each of the references discloses a cutting tool strikingly similar to the device of Smith in having pivotal handles with cutting blades and a pair of dies. While it is believed that each of the references has a bearing on the patentability of claims 1-3 of the Smith patent, the subject matter claimed differs from the references and is believed patentable thereover

Insofar as claims 1 and 2 are concerned, none of the references show the particular dies claimed and the structure of these claimed dies would not have been obvious to a person of ordinary skill in the art at the time the invention was made.

As to claim 3, while the cutting blades required by this claim are shown in Paulk et al, the remainder of the claimed structure is found only in Weid et al. A person of ordinary skill in the art at the time the invention was made would not have found it obvious to substitute the cutting blades of Paulk et al for those of Weid et al. In fact, the disclosure of Weid et al would lead a person of ordinary skill in the art away from the use of cutting blades such as shown in Paulk et al.

The reference to McGee, while generally Similar, lacks the particular cooperation between the elements which is specifically set forth in each of claims 1-3.

Respectfully submitted,

(Signed)

William Green
Attorney for Patent Owner

2206 Handling of Prior Art Citation

Prior art citations received in the Office will be forwarded to the Technology Center (TC) that currently examines the class and subclass in which the patent to which the prior art citations are addressed is classified as an original.

It is the responsibility of the TC to immediately determine whether a citation meets the requirements of the statute and the rules and to enter it into the patent file at the appropriate time if it is proper.

If a proper citation is filed after the date of an order for reexamination but it is not entitled to entry pursuant to the reexamination rules, the citation is retained (stored) in the TC until the reexamination is terminated. Note 37 CFR 1.501(a) and MPEP § 2294. A tag should be placed on the reexamination file as a reminder of the citation to be placed in the patent file after termination of the reexamination proceeding. The citation is then placed in the TC's citation storage file. After the reexamination proceeding is terminated, the citation is removed from the storage file and processed for placement in the patent file. Citations filed after the date of an order for reexamination which are not entitled to entry pursuant to the reexamination rules will not be considered by the examiner during the reexamination.

I. CITATION QUALIFIES FOR ENTRY UNDER 37 CFR 1.501

A. Citations by Third Party

1. Prior to Order in Any Pending Reexamination Proceeding

If the citation is proper (i.e., limited to patents and printed publications) and is filed prior to an order in a reexamination proceeding, it should be immediately entered into the patent file. If the citation includes an indication of service on the patent owner, the citation is merely timely entered and no notice of such entry is sent to any party. If the citation does not include an indication of service, the patent owner should be notified that a citation of prior art has been entered into the patent file. If a duplicate copy of the citation was filed, the duplicate copy should be sent to the patent owner along with the notification. If no duplicate copy is present, no copy will be sent with the notification. Wording similar to the following should be used:

"A citation of prior art under 35 U.S.C. 301 and 37 CFR 1.501 has been filed on ____ in your patent number ____ entitled_____.

This notification is being made to inform you that the citation of prior art has been placed in the file wrapper of:

[ ] the above identified patent.

[ ] reexamination control # _____.

The person submitting the prior art:

1. [ ] was not identified

2. [ ] is confidential

3. [ ] is _____."

2. After the Order in Any Pending Reexamination Proceeding

If the citation is proper but is filed after an order for reexamination in a pending reexamination, the citation is not entered at the time because of the ongoing reexamination. The patent owner and sender (if known) should be alerted of this fact. Such notification is important to enable the patent owner to consider submitting the prior art under 37 CFR 1.555 during the reexamination. Such notification will also enable the third party sender to consider the desirability of filing a separate request for reexamination. If the citation does not include service of a copy on the patent owner and a duplicate copy is submitted, the duplicate copy should be sent to the patent owner along with the notification. If a duplicate copy is not present, no copy will accompany the notification to the patent owner. In this situation, the original copy (in storage) should be made available for copying by the patent owner. If the citation includes service of a copy on the patent owner, the citation is placed in storage and not entered until the reexamination is terminated. The patent owner and third party sender (if known) should be given notice of this action.

An example of a letter giving notice to the patent owner and third party sender is as follows.

John A. Jones (Citation Sender)
Jones & Smith
1020 United First Bldg.
1033 Any Street
U.S. Town, Washington 98121

Richard A. Davis (Patent Owner)
The A.B. Good Co.
Patent Law Dept.
9921 Any Road
Any City, Ohio 44141

In re Doe, et al	:	
Examination Proceeding	:	
Control No. 90/999,999	:	**NOTIFICATION RE**
Filed: February 7, 2000	:	**PRIOR ART CITATION**
For: U.S. Patent No. 9,999,999	:	

The prior art citation filed May 19, 2000, is a proper citation under 37 CFR 1.501(a); however, it was filed after the May 2, 2000, date of the order for reexamination in reexamination control # 90/999,999.

Because the prior art citation was filed after the date of the order for reexamination, the citation is being retained in the Technology Center (TC 1700) until the reexamination is terminated. Note 37 CFR 1.501(a) and MPEP § 2294. At that time, the citation will be processed for placement in the patent file of patent # 9,999,999.

The prior art citation filed May 19, 2000, will not be considered in reexamination control # 90/999,999.

The patent owner and sender of the citation are being provided with a copy of this notification. If appropriate, the patent owner may wish to consider submitting prior art from the prior art citation pursuant to 37 CFR 1.555 during the reexamination proceeding (reexamination control # 90/999,999). In addition, if appropriate, the sender may file a request for reexamination to place the art of the prior art citation before the patent examiner.

Kenneth M. Schor
Special Programs Examiner
Technology Center 3700

B. Citation Filed by Patent Owner

If a proper prior art citation is filed by the patent owner, it should be entered in the file. This is true whether the citation is filed prior to or after an order for reexamination has been mailed. No notification to the patent owner is necessary.

The following diagram shows the various situations which can occur when a proper prior art citation is filed and the action to be taken for each alternative situation:

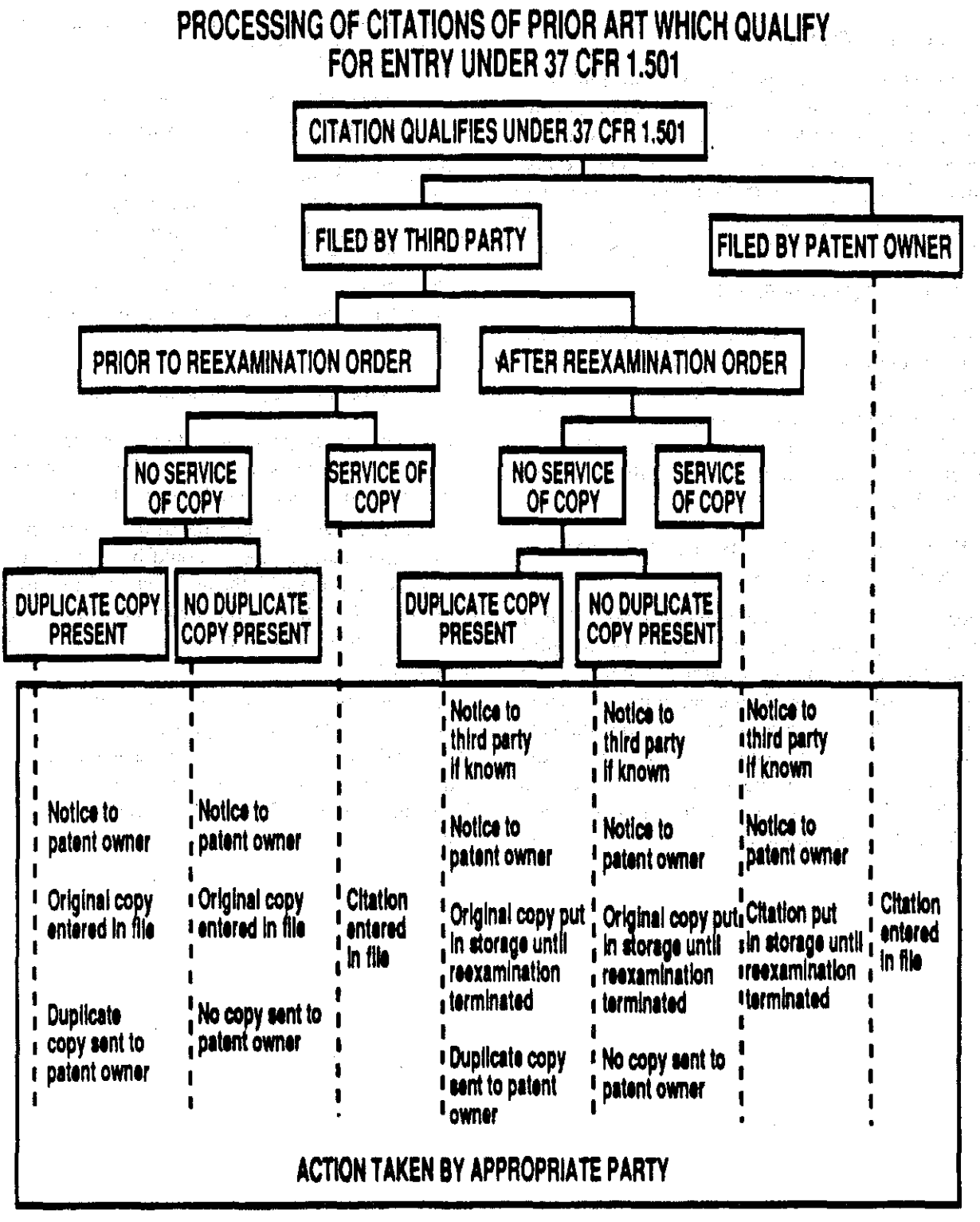
PROCESSING OF CITATIONS OF PRIOR ART WHICH QUALIFY FOR ENTRY UNDER 37 CFR 1.501
CITATION QUALIFIES UNDER 37 CFR 1.501
FILED BY THIRD PARTY
FILED BY PATENT OWNER
PRIOR TO REEXAMINATION ORDER
AFTER REEXAMINATION ORDER
NO SERVICE OF COPY
SERVICE OF COPY
NO SERVICE OF COPY
SERVICE OF COPY
DUPLICATE COPY PRESENT
NO DUPLICATE COPY PRESENT
DUPLICATE COPY PRESENT
NO DUPLICATE COPY PRESENT
Notice to patent owner
Original copy entered in file
Duplicate copy sent to patent owner
Notice to patent owner
Original copy entered in file
No copy sent to patent owner
Citation entered in file
Notice to third party if known
Notice to patent owner
Original copy put in storage until reexamination terminated
Duplicate copy sent to patent owner
Notice to third party if known
Notice to patent owner
Original copy put in storage until reexamination terminated
No copy sent to patent owner
Notice to third party if known
Notice to patent owner
Citation put in storage until reexamination terminated
Citation entered in file
ACTION TAKEN BY APPROPRIATE PARTY

II. CITATION DOES NOT QUALIFY FOR ENTRY UNDER 37 CFR 1.501

A. Citation by Third Party

If the citation is not proper (i.e., it is not limited to patents or printed publications), it should not be entered in the patent file. The sender (if known) and the patent owner *in all cases* should be notified that the citation is improper and that it is not being entered in the patent file. The handling of the citation will vary depending on the particular following situation.

1. Service of Copy Included

Where the citation includes an indication of service of copy on the patent owner and the identity of the third party sender is known, the original citation paper should be returned to the third party sender along with the notification of nonentry. If the identity of the third party sender is not known, the original citation papers should be discarded.

2. Service of Copy Not Included; Identity of Third Party Sender Known

Where the citation does not include an indication of service on the patent owner, the identity of the third party sender is known, and a duplicate copy of the citation is present, the original citation papers should be returned to the third party sender and the duplicate copy should be sent to the patent owner along with the notification of nonentry. If the duplicate copy required in 37 CFR 1.501(c) is not present, the original citation papers should be sent to the PATENT OWNER along with the notification of nonentry. The third party sender should be sent a notification that the citation was not entered and that the original citation papers were sent to the patent owner.

3. Service of Copy Not Included; Identity of Third Party Sender Not Known

Where the citation does not include an indication of service, the identity of the third party sender is not known, and a duplicate copy of the citation is or is not present, the duplicate copy (if present) should be discarded and the original citation papers should be sent to the patent owner along with the notification of nonentry.

B. Citation Filed by the Patent Owner

If an improper prior art citation under 37 CFR 1.501 is filed by the patent owner prior to an order for reexamination, it should not be entered in the file.

The patent owner should be notified of the nonentry, and the citation papers should be returned to the patent owner along with the notification. Prior art submission filed by the patent owner after an order for reexamination should be entered in the file under 37 CFR 1.555.

The following diagram shows the various situations which can occur when an improper prior art citation is filed and the action to be taken for each alternative situation. Any unusual problems should be brought to the attention of the Office of Patent Legal Administration.

PROCESSING OF CITATIONS OF PRIOR ART WHICH DO NOT QUALIFY FOR ENTRY UNDER 37 CFR 1.501

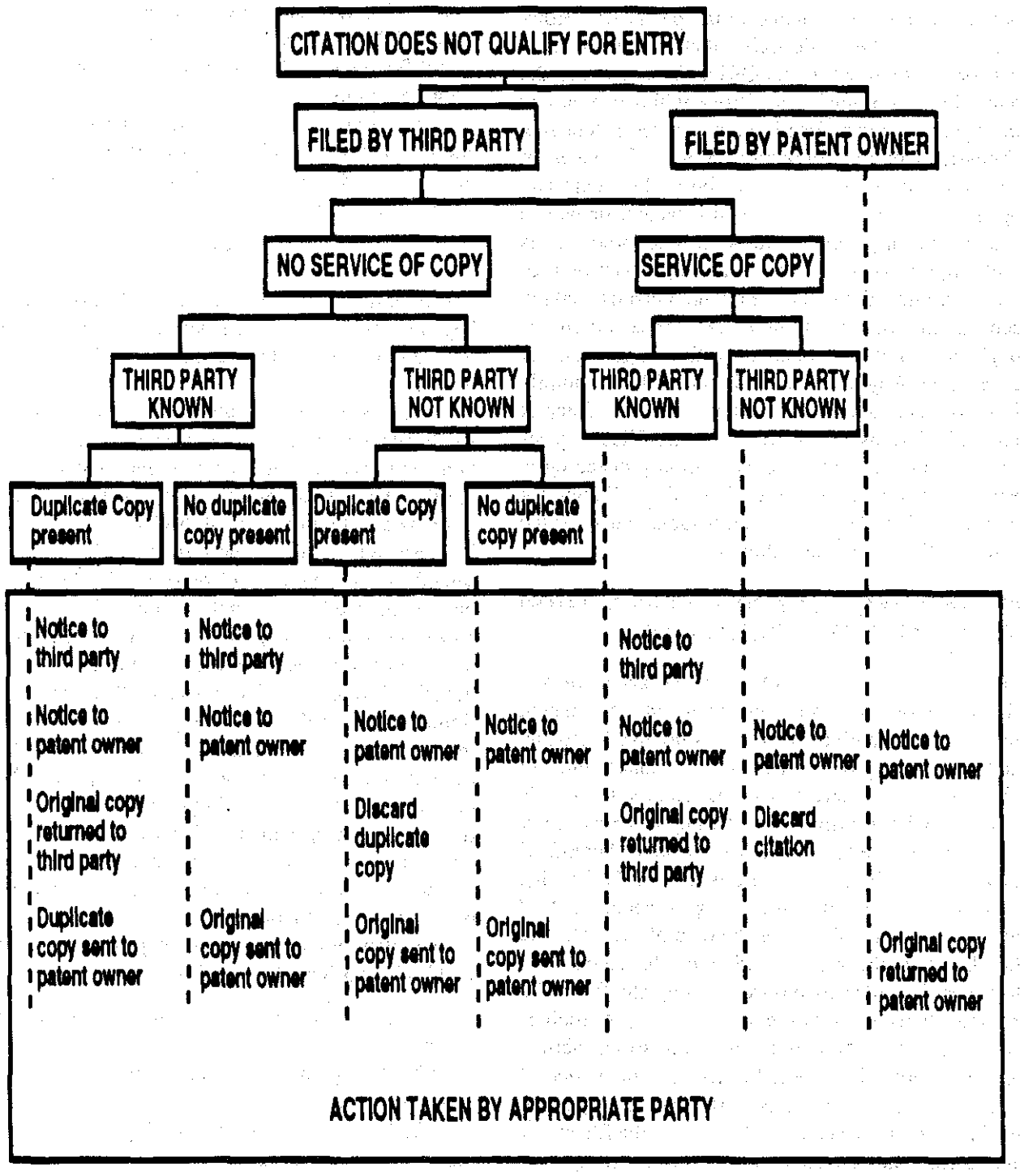

2207 Entry of Court Decision in Patent File

The Solicitor's Office processes *notices* required by 35 U.S.C. 290, received from the clerks of the various courts, and has them entered in the patent file. However, it is considered desirable that the *entire court decision* be supplied to the Office for entry into the patent file. Accordingly, the Office will accept at *any time* from *any party* for placement in the patent file, submissions of the following: copies of notices of suits and other proceedings involving the patent and copies of decisions or other court papers, or papers filed in the court, from litigations or other proceedings involving the patent. Such submissions must be provided without additional comment. Persons making such submissions must *limit the submission to the notification* and not include further arguments or information. Any proper submission will be promptly placed on record (entered) in the patent file. Entry of these submissions is performed by the Files Repository personnel, unless a reexamination proceeding is pending, in which case, the Technology Center (or other area of the Office) having responsibility for the reexamination enters the submission.

WHERE A REQUEST FOR REEXAMINATION OF THE PATENT HAS BEEN FILED

It is important for the Office to be aware of any prior court or other proceedings in which a patent undergoing reexamination is or was involved, and any results of such proceedings. In accordance with 37 CFR 1.565(a), the patent owner is required to provide the Office with information regarding the existence of any such proceedings and the results thereof, if known. As to third parties, note as follows. Ordinarily, while a reexamination proceeding is pending, third party submissions filed after the date of the order are not placed in the reexamination or the patent file. However, in order to ensure a complete file, with updated status information as to prior proceedings regarding a patent undergoing reexamination, submissions (as above-described) limited to *bare notice* of the proceedings, with copies of the papers of the proceedings, will be accepted and placed in the file at any time during the reexamination from any party. See MPEP § 2240 and § 2242 for handling of requests for reexamination of patents involved in litigation.

2208 Service of Citation on Patent Owner

A copy of any submission of a citation of prior art patents or printed publications in a patent file should be served on the patent owner so that the patent owner is kept fully informed as to the content of his or her patent file wrapper. See MPEP § 2206 for handling of prior art citations.

The service to the patent owner should be addressed to the correspondence address as set forth in 37 CFR 1.33(c). See MPEP § 2222 as to the correspondence address.

2209 Reexamination

Procedures for reexamination of issued patents began on July 1, 1981, the date when the reexamination provisions of Public Law 96-517 came into effect.

The reexamination statute and rules permit any person to file a request for reexamination containing certain elements and the fee required under 37 CFR 1.20(c). The Office initially determines if "a substantial new question of patentability" (35 U.S.C. 303(a)) is presented. If such a new question has been presented, reexamination will be ordered. The reexamination proceedings which follow the order for reexamination are very similar to regular examination procedures in patent applications; however, there are notable differences. For example, there are certain limitations as to the kind of rejections which may be made, special reexamination forms to be used, and time periods set to provide "special dispatch." When the reexamination proceedings are terminated, a certificate is issued which indicates the status of all claims following the reexamination.

The following sections of this chapter explain the details of reexamination.

The intent of the reexamination procedures covered in this chapter include the following:

(A) To provide procedures for reexamination of patents;

(B) To implement reexamination in an essentially *ex parte* manner;

(C) To minimize the processing costs and complexities of reexamination;

(D) To maximize respect for the reexamined patent;

(E) To provide procedures for prompt and timely determinations by the Office in accordance with the "special dispatch" requirements of 35 U.S.C. 305.

The basic characteristics of reexamination are as follows:

(A) Anyone can request reexamination at any time during the period of enforceability of the patent;

(B) Prior art considered during reexamination is limited to prior art patents or printed publications applied under the appropriate parts of 35 U.S.C. 102 and 103;

(C) A substantial new question of patentability must be present for reexamination to be ordered;

(D) If ordered, the actual reexamination proceeding is *ex parte* in nature;

(E) Decision on the request must be made no later than 3 months from its filing, and the remainder of proceedings must proceed with "special dispatch;"

(F) If ordered, a reexamination proceeding will normally be conducted to its conclusion and the issuance of a reexamination certificate;

(G) The scope of a claim cannot be enlarged by amendment;

(H) All reexamination and patent files are open to the public.

2210 Request for Reexamination

35 U.S.C. 302. Request for reexamination.

Any person at any time may file a request for reexamination by the Office of any claim of a patent on the basis of any prior art cited under the provisions of section 301 of this title. The request must be in writing and must be accompanied by payment of a reexamination fee established by the Director pursuant to the provisions of section 41 of this title. The request must set forth the pertinency and manner of applying cited prior art to every claim for which reexamination is requested. Unless the requesting person is the owner of the patent, the Director promptly will send a copy of the request to the owner of record of the patent.

37 CFR 1.510. Request for ex parte reexamination.

(a) Any person may, at any time during the period of enforceability of a patent, file a request for an *ex parte* reexamination by the Office of any claim of the patent on the basis of prior art patents or printed publications cited under § 1.501. The request must be accompanied by the fee for requesting reexamination set in § 1.20(c)(1).

(b) Any request for reexamination must include the following parts:

(1) A statement pointing out each substantial new question of patentability based on prior patents and printed publications.

(2) An identification of every claim for which reexamination is requested, and a detailed explanation of the pertinency and manner of applying the cited prior art to every claim for which reexamination is requested. If appropriate the party requesting reexamination may also point out how claims distinguish over cited prior art.

(3) A copy of every patent or printed publication relied upon or referred to in paragraph (b)(1) and (2) of this section accompanied by an English language translation of all the necessary and pertinent parts of any non-English language patent or printed publication.

(4) A copy of the entire patent including the front face, drawings, and specification/claims (in double column format) for which reexamination is requested, and a copy of any disclaimer, certificate of correction, or reexamination certificate issued in the patent. All copies must have each page plainly written on only one side of a sheet of paper.

(5) A certification that a copy of the request filed by a person other than the patent owner has been served in its entirety on the patent owner at the address as provided for in § 1.33(c). The name and address of the party served must be indicated. If service was not possible, a duplicate copy must be supplied to the Office.

(c) If the request does not include the fee for requesting reexamination or all of the parts required by paragraph (b) of this section, the person identified as requesting reexamination will be so notified and given an opportunity to complete the request within a specified time. If the fee for requesting reexamination has been paid but the defect in the request is not corrected within the specified time, the determination whether or not to institute reexamination will be made on the request as it then exists. If the fee for requesting reexamination has not been paid, no determination will be made and the request will be placed in the patent file as a citation if it complies with the requirements of § 1.501(a).

(d) The filing date of the request is:

(1) The date on which the request including the entire fee for requesting reexamination is received in the Patent and Trademark Office; or

(2) The date on which the last portion of the fee for requesting reexamination is received.

(e) A request filed by the patent owner may include a proposed amendment in accordance with § 1.530.

(f) If a request is filed by an attorney or agent identifying another party on whose behalf the request is being filed, the attorney or agent must have a power of attorney from that party or be acting in a representative capacity pursuant to § 1.34(a).

Any person, at any time during the period of enforceability of a patent, may file a request for reexamination by the U.S. Patent and Trademark Office of any claim of the patent based on prior art patents or printed publications. The request must include the elements set forth in 37 CFR 1.510(b) (see MPEP § 2214) and must be accompanied by the fee as set forth in 37 CFR 1.20(c)(1). No attempt will be made to maintain a requester's name in confidence.

After the request for reexamination, including the entire fee for requesting reexamination, is received in the Office, no abandonment, withdrawal, or striking of the request is possible, regardless of who requests the same. In some limited circumstances, such as after a court decision where all of the claims are finally held invalid, a reexamination order may be vacated, see MPEP § 2286.

2211 Time for Requesting Examinations

Under 37 CFR 1.510(a), any person may, at any time during the period of enforceability of a patent, file a request for reexamination. This period was set by rule, since the Office considered that Congress could not have intended expending Office resources on deciding patent validity questions in patents which cannot be enforced. In this regard see *Patlex Corp. v. Mossinghoff*, 758 F.2d 594, 225 USPQ 243, 249 (Fed. Cir. 1988). The period of enforceability is determined by adding 6 years to the date on which the patent expires. The patent expiration date for a utility patent, for example, is determined by taking into account the term of the patent, whether maintenance fees have been paid for the patent, and whether any disclaimer was filed as to the patent to shorten its term. Any other relevant information should also be taken into account. In addition, if litigation is instituted within the period of the statute of limitations, requests for reexamination may be filed after the statute of limitations has expired, as long as the patent is still enforceable against someone.

2212 Persons Who May File a Request

37 CFR 1.510. Request for reexamination.

(a) Any person may, at any time during the period of enforceability of a patent, file a request for an *ex parte* reexamination by the Office of any claim of the patent on the basis of prior art patents or printed publications cited under § 1.501. The request must be accompanied by the fee for requesting reexamination set in § 1.20(c)(1).

*****

35 U.S.C. 302 and 37 CFR 1.510(a) both indicate that "any person" may file a request for reexamination of a patent. Accordingly, there are no persons who are excluded from being able to seek reexamination. Corporations and/or governmental entities are included within the scope of the term "any person." The patent owner can ask for reexamination which will be limited to an *ex parte* consideration of prior patents or printed publications. If the patent owner wishes to have a wider consideration of issues by the Office, including matters such as prior public use or sale, the patent owner may file a reissue application. It is also possible for the Commissioner to initiate reexamination on the Commissioner's own initiative under 37 CFR 1.520. Reexamination will be initiated by the Commissioner on a very limited basis, such as where a general public policy question is at issue and there is no interest by "any other person." Some of the persons likely to use reexamination are patentees, licensees, potential licensees, attorneys without identification of their real client in interest, infringers, potential exporters, patent litigants, interference applicants, and International Trade Commission respondents. The name of the person who files the request will not be maintained in confidence.

2213 Representative of Requester

37 CFR 1.510. Request for ex parte reexamination.

*****

(f) If a request is filed by an attorney or agent identifying another party on whose behalf the request is being filed, the attorney or agent must have a power of attorney from that party or be acting in a representative capacity pursuant to § 1.34(a).

Where an attorney or agent files a request for an identified client (the requester), he or she may act under either a power of attorney, or act in a representative capacity under 37 CFR 1.34(a), 37 CFR 1.510(f). While the filing of the power of attorney is desirable, processing of the reexamination request will not be delayed due to its absence.

If any question of authority to act is raised, proof of authority may be required by the Office.

All correspondence for a requester that is not the patent owner should be addressed to the representative of the requester, unless a specific indication is made to forward correspondence to another address.

If the request is filed by a person on behalf of the patent owner, correspondence will be directed to the patent owner at the address as indicated in 37 CFR 1.33(c), regardless of the address of the person filing the request. See MPEP § 2222 for a discussion of who receives correspondence on behalf of a patent owner and how changes in the correspondence address are to be made.

A patent owner may not be represented during a reexamination proceeding by an attorney or other person who is not registered to practice before the Office, since those individuals are prohibited by 37 CFR 1.33(c) from signing amendments and other papers filed in a reexamination proceeding on behalf of the patent owner.

2214 Content of Request

37 CFR 1.510. Request for ex parte reexamination.

(a) Any person may, at any time during the period of enforceability of a patent, file a request for an *ex parte* reexamination by the Office of any claim of the patent on the basis of prior art patents or printed publications cited under § 1.501. The request must be accompanied by the fee for requesting reexamination set in § 1.20(c)(1).

(b) Any request for reexamination must include the following parts:

(1) A statement pointing out each substantial new question of patentability based on prior patents and printed publications.

(2) An identification of every claim for which reexamination is requested, and a detailed explanation of the pertinency and manner of applying the cited prior art to every claim for which reexamination is requested. If appropriate the party requesting reexamination may also point out how claims distinguish over cited prior art.

(3) A copy of every patent or printed publication relied upon or referred to in paragraph (b)(1) and (2) of this section accompanied by an English language translation of all the necessary and pertinent parts of any non-English language patent or printed publication.

(4) A copy of the entire patent including the front face, drawings, and specification/claims (in double column format) for which reexamination is requested, and a copy of any disclaimer, certificate of correction, or reexamination certificate issued in the patent. All copies must have each page plainly written on only one side of a sheet of paper.

(5) A certification that a copy of the request filed by a person other than the patent owner has been served in its entirety on the patent owner at the address as provided for in § 1.33(c). The name and address of the party served must be indicated. If service was not possible, a duplicate copy must be supplied to the Office.

*****

37 CFR 1.510(a) requires the payment of the fee specified in 37 CFR 1.20(c)(1) for a request for reexamination. See MPEP § 2215.

37 CFR 1.510(b) sets forth the required elements of a request for reexamination. The elements are as follows:

"(1) a statement pointing out each substantial new question of patentability based on prior patents and printed publications."

This statement should clearly point out what the requester considers to be the substantial new question of patentability which would warrant a reexamination. The cited prior art should be listed on a form PTO-1449 by the requester. See also MPEP § 2217.

A request for reexamination must assert a substantial new question of patentability. A requester may not, in a request for reexamination, argue that the submitted references do not raise a substantial new question of patentability, and that no order for reexamination should be issued.

"(2) An identification of every claim for which reexamination is requested, and a detailed explanation of the pertinency and manner of applying the cited prior art to every claim for which reexamination is requested. If appropriate the party requesting reexamination may also point out how claims distinguish over cited prior art."

The request should apply the cited prior art to every claim for which reexamination is requested. If the request is filed by the patent owner, he or she may also indicate how the claims distinguish from the cited prior art patents and printed publications.

"(3) A copy of every patent or printed publication relied upon or referred to in paragraph (b)(1) and (2) of this section accompanied by an English language translation of all the necessary and pertinent parts of any non-English language patent or printed publication."

A copy of each cited patent or printed publication, as well as a translation of each non-English document is required so that all materials will be available to the examiner for full consideration. See MPEP § 2218.

"(4) A copy of the entire patent including the front face, drawings, and specification/claims (in double column format) for which reexamination is requested, and a copy of any disclaimer, certificate of correction, or reexamination certificate issued in the patent. All copies must have each page plainly written on only one side of a sheet of paper."

A copy of the patent, for which reexamination is requested, should be provided in a double column format. Thus, a full copy of the printed patent (including the front page) can be used to provide the abstract, drawings, specification, and claims of the patent for the reexamination request.

Any disclaimer, certificate of correction, or reexamination certificate issued in the patent becomes a part of the patent. Thus, a copy of each must be supplied in order to provide the complete patent.

> "(5) A certification that a copy of the request filed by a person other than the patent owner has been served in its entirely on the patent owner at the address as provided for in § 1.33(c). The name and address of the party served must be indicated. If service was not possible, a duplicate copy must be supplied to the Office."

If the request is filed by a person other than the patent owner, a certification that a copy of the request papers has been served on the patent owner must be included. The request should be as complete as possible, since there is no guarantee that the examiner will consider other prior art when making the decision on the request. Also, if no statement is filed by the patent owner, no later reply or other submission may be filed by the requester in the *ex parte* reexamination proceeding. See also MPEP § 2220.

Form PTO-1465 should be helpful to persons filing requests for reexamination. The use of this form is encouraged, but its use is not a requirement of the law nor the rules.

PTO/SB/57 (02-01)
Approved for use through 01/31/2004. OMB 0651-0033
U.S. Patent and Trademark Office; U.S. DEPARTMENT OF COMMERCE
Under the Paperwork Reduction Act of 1995, no persons are required to respond to a collection of information unless it displays a valid OMB control number.

(Also referred to as FORM PTO - 1465)

REQUEST FOR *EX PARTE* REEXAMINATION TRANSMITTAL FORM

Address to:
Assistant Commissioner for Patents
Box Reexam
Washington, D.C. 20231

Attorney Docket No.
Date:

1. ☐ This is a request for *ex parte* reexamination pursuant to 37 CFR 1.510 of patent number _____ issued _____. The request is made by:

   ☐ patent owner. ☐ third party requester.

2. ☐ The name and address of the person requesting reexamination is:

   _____
   _____
   _____

3. ☐ a. A check in the amount of $_____is enclosed to cover the reexamination fee, 37 CFR 120 (c)(1);

   ☐ b. The Commissioner is hereby authorized to charge the fee as set forth in 37 CFR 120 (c)(1) to Deposit Account No. _____; or

   ☐ c. Payment by credit card. Form PTO-2038 is attached.

4. ☐ Any refund should be made by ☐ check or ☐ credit to Deposit Account No._____. 37 CFR 1.26(c). If payment is made by credit card, refund must be to credit card account.

5. ☐ A copy of the patent to be reexamined having a double column format on one side of a separate paper is enclosed. 37 CFR 1.510(b)(4)

6. ☐ CD-ROM or CD-R in duplicate, Computer Program (Appendix) or large table

7. ☐ Nucleotide and/or Amino Acid Sequence Submission
   If applicable, all of the following are necessary

   a. ☐ Computer Readable Form (CRF)
   b. Specification Sequence Listing on:

      i ☐ CD-ROM (2 copies) or CD-R (2 copies); **or**
      ii ☐ paper

   c. ☐ Statements verifying identity of above copies

8. ☐ A copy of any disclaimer, certificate of correction or reexamination certificate issued in the patent is included.

9. ☐ Reexamination of claim(s) _____is requested.

10. ☐ A copy of every patent or printed publication relied upon is submitted herewith including a listing thereof on Form PTO-1449.

11. ☐ An English language translation of all necessary and pertinent non-English language patents and/or printed publications is included.

[Page 1 of 2]

Burden Hour Statement: This form is estimated to take 2.0 hours to complete. Time will vary depending upon the needs of the individual case. Any comments on the amount of time you are required to complete this form should be sent to the Chief Information Officer, U.S. Patent and Trademark Office, Washington, DC 20231. DO NOT SEND FEES OR COMPLETED FORMS TO THIS ADDRESS. SEND TO: Assistant Commissioner for Patents, Box Reexam, Washington, DC 20231.

PTO/SB/57 (02-01)
Approved for use through 01/31/2004. OMB 0651-0033
U.S. Patent and Trademark Office; U.S. DEPARTMENT OF COMMERCE
Under the Paperwork Reduction Act of 1995, no persons are required to respond to a collection of information unless it displays a valid OMB control number.

12. ☐ The attached detailed request includes at least the following items:
   a. A statement identifying each substantial new question of patentability based on prior patents and printed publications. 37 CFR 1.510(b)(1)
   b. An identification of every claim for which reexamination is requested, and a detailed explanation of the pertinency and manner of applying the cited art to every claim for which reexamination is requested. 37 CFR 1.510(b)(2)

13. ☐ A proposed amendment is included (only where the patent owner is the requester). 37 CFR 1.510(e)

14. ☐ a. It is certified that a copy of this request (if filed by other than the patent owner) has been served in its entirety on the patent owner as provided in 37 CFR 1.33(c).
The name and address of the party served and the date of service are:

_____
_____
_____

Date of Service:_____; or

☐ b. A duplicate copy is enclosed since service on patent owner was not possible.

15. ☐ Correspondence Address: Direct all communication about the reexamination to:

☐ Customer Number [ ] → *Place Customer Number Bar Code Label here*
OR *Type Customer Number here*

☐ Firm or Individual Name					
Address (line 1)					
Address (line 2)					
City		State		Zip	
Country					
Telephone		Fax			

16. ☐ The patent is currently the subject of the following concurrent proceeding(s):
   ☐ a. Copending reissue Application No._____.
   ☐ b. Copending reexamination Control No._____.
   ☐ c. Copending Interference No._____.
   ☐ d. Copending litigation styled:

_____
_____

WARNING: Information on this form may become public. Credit card information should not be included on this form. Provide credit card information and authorization on PTO-2038.

_____
Authorized Signature

_____
Date

☐ *For Patent Owner Requester*
☐ *For Third Party Requester*

[Page 2 of 2]

Attachment to Form PTO-1465
providing information of
Pat. No. 9,999,999

Sir:

Reexamination under 35 U.S.C. 302 - 307 and 37 CFR 1.510 is requested of United States patent number 9,999,999 which issued on July 7, 1987, to Joseph Smith. This patent is still enforceable.

I. Claims for which reexamination is requested:

- Reexamination is requested of claims 1-3 of the Smith patent in view of the earlier United States Patent document number 594,225 to Berridge which is listed on attached Information Disclosure Statement form and of which a copy is enclosed.

- Reexamination is also requested of claim 4 of the Smith patent in view of the earlier Swiss Patent document 80,555 to Hotopp in view of the disclosure in "American Machinist" magazine, October 16, 1950, issue, on page 169. An English translation of the German language Swiss document is enclosed. Copies of the Hotopp and "American Machinist" documents are also enclosed.

II: Explanation of pertinency and manner of applying cited prior art to every claim for which reexamination is requested based on prior art:

Claims 1-3 of the Smith patent are considered to be fully anticipated under 35 U.S.C. 102 by the prior art patent document to Berridge.

Claim 3 of the Smith patent, which is more specific than claims 1 and 2 in all features, is set forth below with an explanation as to how the prior art patent document to Berridge meets all the recited features.

Smith, claim 3:

"In a cutting and crimping tool"	(Berridge page 1, lines 10-13 states his invention is "an improved tool for crimping metal which in its preferred form of embodiment is combined with a cutting-tool or shears, forming therewith a combination-tool.")
"the combination with the cutting blades"	(elements 4 and 5 in Berridge)
"and their pivoted handles"	(elements 1 and 2 in Berridge)

"of bosses arranged at an angle to and offset from the plane of the shear blades"	("bosses" as used in the Smith claim is used to mean a projection. The dies 6 and 7 of the Berridge prior art patent document are arranged at the same angle to the plane of the shear blades and are arranged at an angle in the same manner as shown in the drawing figures of the Smith patent.)
"and crimping dies formed on the meeting faces of said bosses"	(The dies 6 and 7 (bosses) of Berridge have meeting die-faces 12 and 13 (page 1, line 63) for performing crimping operations (page 1, lines 70 - 74.1))

Claim 4 of the Smith patent is considered to be unpatentable under 35 U.S.C. 103 in view of the prior art Swiss patent document to Hotopp and further in view of the prior art American Machinist magazine publication, page 169 of the October 16, 1950 issue.

Claim 4 of Smith reads as quoted below:

"In a cutting and crimping tool,"	(The prior art Swiss patent document to Hotopp discloses cutting jaws (column 1, line 8) and dies "b" and "c" which may be used for crimping.)
"the combination of a pair of pivoted handles"	(elements "a" and "e" in the prior art document to Hotopp).
"with cutting jaws at one end and crimping dies on the opposite side of the pivot"	(The prior art document to Hotopp discloses cutting jaws (column 1 line 8) and crimping dies "b" and "c" on the opposite side of pivot "d" from the cutting jaws.)

"and rounded prongs projecting from said cutting jaws"	(Rounded prongs are not specifically disclosed by Hotopp but are shown to be old in the art by the illustration in "American Machinist" magazine under the title "Double-Purpose Pliers Don't Break Insulation". To provide the cutting jaws of Hotopp with rounded prongs as shown in the "American Machinist" magazine is considered to be a matter which would have been obvious to a person having ordinary skill in the art at the time the invention was made.)

III. Statement pointing out substantial new question of patentability:
The prior art documents referred to above were not of record in the file of the Smith patent. Since claims 1-4 in the Smith patent are not patentable over these prior art documents, a substantial new question of patentability is raised. Further, these prior art documents are closer to the subject matter of Smith than any prior art which was cited during the prosecution of the Smith patent. These prior art documents provide teachings not provided during prosecution of the Smith patent.

(Signed)

John Doe
Attorney for requester

2215 Fee for Requesting Reexamination

37 CFR 1.510. Request for ex parte reexamination.

*****

(c) If the request does not include the fee for requesting reexamination or all of the parts required by paragraph (b) of this section, the person identified as requesting reexamination will be so notified and given an opportunity to complete the request within a specified time. If the fee for requesting reexamination has been paid but the defect in the request is not corrected within the specified time, the determination whether or not to institute reexamination will be made on the request as it then exists. If the fee for requesting reexamination has not been paid, no determination will be made and the request will be placed in the patent file as a citation if it complies with the requirements of § 1.501(a).

(d) The filing date of the request is:

(1) The date on which the request including the entire fee for requesting reexamination is received in the Patent and Trademark Office; or

(2) The date on which the last portion of the fee for requesting reexamination is received.

*****

In order for a request to be accepted, be given a filing date, and be published in the *Official Gazette*, the entire fee required under 37 CFR 1.20(c)(1) for filing a request for reexamination must be paid.

If the request for reexamination is subsequently denied or vacated, a refund in accordance with 37 CFR 1.26(c) will be made to the identified requester.

If the entire fee for reexamination is not paid, the request will be considered to be incomplete. See 37 CFR 1.510 (c) and (d).

Where the entire filing fee is not paid, the request, if otherwise proper, should be treated as a citation of prior art under 37 CFR 1.501. See MPEP § 2206 for handling of prior art citations.

2216 Substantial New Question of Patentability

Under 35 U.S.C. 304, the Office must determine whether "a substantial new question of patentability" affecting any claim of the patent has been raised. 37 CFR 1.510(b)(1) requires that a request for reexamination include "a statement pointing out each substantial new question of patentability based on prior patents and printed publications." If such a new question is found, an order for reexamination of the patent is issued. It is therefore important that the request clearly set forth in detail what the requester considers the "substantial new question of patentability" to be in view of prior patents and printed publications. The request should point out how any questions of patentability raised are substantially different from those raised in the previous examination of the patent before the Office. If a substantial new question of patentability is found as to one claim, all claims will be reexamined during the *ex parte* reexamination process. See also MPEP § 2242.

Questions relating to grounds of rejection other than those based on prior art patents or printed publications should not be included in the request and will not be considered by the examiner if included. Examples of such questions that will not be considered are public use, on sale, and fraud.

Affidavits or declarations which explain the contents or pertinent dates of prior patents or printed publications in more detail may be considered in reexamination. See MPEP § 2258.

2217 Statement in the Request Applying Prior Art

The third sentence of 35 U.S.C. 302 indicates that the "request must set forth the pertinency and manner of applying cited prior art to every claim for which reexamination is requested." 37 CFR 1.510(b)(2) requires that the request include "[a]n identification of every claim for which reexamination is requested, and a detailed explanation of the pertinency and manner of applying the cited prior art to every claim for which reexamination is requested." If the request is filed by the patent owner, the request for reexamination may also point out how claims distinguish over cited prior art.

The prior art applied may only consist of prior art patents or printed publications. Substantial new questions of patentability may be based upon the following portions of 35 U.S.C. 102:

"(a)...patented or described in a printed publication in this or a foreign country, before the invention thereof by the applicant for patent, or"

"(b) the invention was patented or described in a printed publication in this or a foreign country... more than one year prior to the date of the application for patent in the United States, or"

*****

"(d) the invention was first patented or caused to be patented, or was the subject of an inventor's certificate, by the applicant or his legal representatives or assigns in a foreign country prior to the date of the application for patent in this country on an application for patent or inventor's certificate filed more than twelve months before the filing of the application in the United States, or"

"(e) the invention was described in—

(1) an application for patent, published under section 122(b), by another filed in the United States before the invention by the applicant for patent, except that an international application filed under the treaty defined in section 351(a) shall have the effect under this subsection of a national application published under section 122(b) only if the international application designating the United States was published under Article 21(2)(a) of such treaty in the English language; or

(2) a patent granted on an application for patent by another filed in the United States before the invention by the applicant for patent, except that a patent shall not be deemed filed in the United States for the purposes of this subsection based on the filing of an international application filed under the treaty defined in section 351(a); or"

"(f) he did not himself invent the subject matter sought to be patented, or"

"(g)(1) during the course of an interference conducted under section 135 or section 291, another inventor involved therein establishes, to the extent permitted in section 104, that before such person's invention thereof the invention was made by such other inventor and not abandoned, suppressed, or concealed, or (2) before such person's invention thereof, the invention was made in this country by another inventor who had not abandoned, suppressed, or concealed it. In determining priority of invention under this subsection, there shall be considered not only the respective dates of conception and reduction to practice of the invention, but also the reasonable diligence of one who was first to conceive and last to reduce to practice, from a time prior to conception by the other."

Where substantial new questions of patentability are presented under 35 U.S.C. 102(f) or (g), the prior invention of another must be disclosed in a patent or printed publication. Substantial new questions of patentability may also be presented under 35 U.S.C. 103 which are based on the above indicated portions of 35 U.S.C. 102. Substantial new questions of patentability may be found under 35 U.S.C. 102(f)/103 or 102(g)/ 103 based on the prior invention of another disclosed in a patent or printed publication if the reference invention and the claimed invention were not commonly owned at the time the claimed invention was made. See, 35 U.S.C. 103(c) and MPEP § 706.02(l). See MPEP § 706.02(l)(1) for information pertaining to references which qualify as prior art under 35 U.S.C. 102(e)/103.

Substantial new questions of patentability must be based on patents or printed publications. Other matters, such as public use or sale, inventorship, 35 U.S.C. 101, 35 U.S.C. 112, fraud, etc., will not be considered when making the determination on the request and should not be presented in the request. Further, a prior art patent or printed publication cannot be properly applied as a ground for reexamination if it is merely used as evidence of alleged prior public use or sale, insufficiency of disclosure, etc. The prior art patent or printed publication must be applied directly to claims under 35 U.S.C. 103 and/or an appropriate portion of 35 U.S.C. 102 or relate to the application of other prior art patents or printed publications to claims on such grounds.

The statement applying the prior art may, where appropriate, point out that claims in the patent for which reexamination is requested are entitled only to the filing date of the patent and are not supported by an earlier foreign or United States patent application whose filing date is claimed. For example, the effective date of some of the claims in a patent which resulted from a continuing application under 35 U.S.C. 120 could be the filing date of the continuing application since those claims were not supported in the parent application. Therefore, intervening patents or printed publications are available as prior art. See *In re Ruscetta*, 255 F.2d 687, 118 USPQ 101 (CCPA 1958), *In re van Langehoven*, 458 F.2d 132, 173 USPQ 426 (CCPA 1972). See also MPEP § 201.11.

Double patenting is normally proper for consideration in reexamination. See *In re Lonardo*, 119 F.3d 960, 43 USPQ2d 1262 (Fed. Cir. 1997). See also the discussion as to double patenting in MPEP § 2258.

The mere citation of new patents or printed publications without an explanation does not comply with 37 CFR 1.510(b)(2). Requester must present an explanation of how the cited patents or printed publications are applied to all claims which requester considers to merit reexamination. This not only sets forth the requester's position to the Office, but also to the patent owner (where the patent owner is not the requester).

Affidavits or declarations which explain the contents or pertinent dates of prior patents or printed publications in more detail may be considered in reexamination. See MPEP § 2258.

ADMISSIONS

The consideration under 35 U.S.C. 303 of a request for reexamination is limited to prior art patents and printed publications. See *Ex parte McGaughey*, 6 USPQ2d 1334, 1337 (Bd. Pat. App. & Inter. 1988). Thus an admission, *per se*, may not be the basis for establishing a substantial new question of patentability. However, an admission by the patent owner of record in the file or in a court record may be utilized in combination with a patent or printed publication.

For handling of admissions during the examination stage of a proceeding (i.e., after reexamination has been ordered), see MPEP § 2258.

The admission can reside in the patent file (made of record during the prosecution of the patent application) or may be presented during the pendency of the reexamination proceeding or in litigation. Admissions by the patent owner as to any matter affecting patentability may be utilized to determine the scope and content of the prior art **in conjunction with patents and printed publications** in a prior art rejection, whether such admissions result from patents or printed publications or from some other source. An admission relating to *any* prior art (i.e., on sale, public use, etc.) established in the record or in court may be used by the examiner in combination with patents or printed publications in a reexamination proceeding. The admission must stand on its own. Information supplementing or further defining the admission would be improper.

Any admission submitted by the patent owner is proper. A third party, however, may not submit admissions of the patent owner made outside the record of the file or the court record. Such a submission would be outside the scope of reexamination.

2218 Copies of Prior Art

It is required that a copy of each patent or printed publication relied on or referred to in the request be filed with the request (37 CFR 1.510(b)(3)). If any of the documents are not in the English language, an English language translation of all necessary and pertinent parts is also required. An English language summary or abstract of a non-English language document is usually not sufficient.

It is also helpful to include copies of the prior art considered during earlier prosecution of the patent for which reexamination is requested. The presence of both the old and the new prior art allows a comparison to be made to determine whether a substantial new question of patentability is indeed present. See MPEP § 2242.

Copies of parent applications should be submitted if the content of the parent application has a bearing on the alleged substantial new question of patentability; for example, if the patent is a continuation-in-part and the question of patentability relates to a rejection based on intervening prior art where support in the parent application is relevant. *In re Ruscetta*, 255 F. 2d 687, 118 USPQ 101 (CCPA 1958).

2219 Copy of Printed Patent

The U.S. Patent and Trademark Office will prepare a separate file wrapper for each reexamination request which will become part of the patent file. Since, in some instances, it may not be possible to obtain the patent file promptly, and in order to provide a format which can be amended and used for printing, requesters are required under 37 CFR 1.510(b)(4) to include a copy of the patent for which reexamination is requested, to serve as the specification for the reexamination proceeding. A copy of the patent for which reexamination is requested should be provided in a double column format. Thus, a full copy of the printed patent (including the front page) would be used to provide the abstract, drawings, specification, and claims of the patent for the reexamination request. A copy of any disclaimer, certificate of correction, or reexamination certificate issued for the patent must also be included, so that a complete history of the patent is before the Office for consideration. A copy of any Federal Court decision, complaint in a pending civil action, or interference decision should also be submitted.

2220 Certificate of Service

If the requester is a person other than the patent owner, the owner of the patent must be served with a copy of the request in its entirety. The service should be made to the correspondence address as indicated in 37 CFR 1.33(c). The third party requester must set

forth on the certificate of service the name and address of the party served and the method of service. The certificate of service must be attached to the request submitted to the Office. Further, the copy of the request served on the patent owner must also include a copy of the certificate of service.

The most recent address of the attorney or agent of record can be determined by checking the Office's register of patent attorneys and agents maintained by the Office of Enrollment and Discipline pursuant to 37 CFR 10.5 and 10.11(a). See MPEP § 2266.03 regarding service on the requester and on the patent owner.

2221 Amendments Included in Request by Patent Owner

Under 37 CFR 1.510(e), a patent owner may include a proposed amendment with his or her request. Any such amendment must be in accordance with 37 CFR 1.530(d) through (j). See MPEP § 2250. Amendments may also be proposed by patent owners in a statement under 37 CFR 1.530(b) and (c) or during the actual *ex parte* reexamination prosecution (37 CFR 1.550(b)). See also MPEP § 2234 and § 2250.

The request should be decided on the wording of the patent claims in effect at that time (without any proposed amendments). The decision on the request will be made on the basis of the patent claims as though the proposed amendment had not been presented. However, if the request for reexamination is granted, the *ex parte* reexamination prosecution and examination should be on the basis of the claims as amended.

2222 Address of Patent Owner

37 CFR 1.33. Correspondence respecting patent applications, reexamination proceedings, and other proceedings.

*****

(c) All notices, official letters, and other communications for the patent owner or owners in a reexamination proceeding will be directed to the attorney or agent of record (see § 1.34(b)) in the patent file at the address listed on the register of patent attorneys and agents maintained pursuant to §§ 10.5 and 10.11 or, if no attorney or agent is of record, to the patent owner or owners at the address or addresses of record. Amendments and other papers filed in a reexamination proceeding on behalf of the patent owner must be signed by the patent owner, or if there is more than one owner by all the owners, or by an attorney or agent of record in the patent file, or by a registered attorney or agent not of record who acts in a representative capacity under the provisions of § 1.34(a). Double correspondence with the patent owner or owners and the patent owner's attorney or agent, or with more than one attorney or agent, will not be undertaken. If more than one attorney or agent is of record and a correspondence address has not been specified, correspondence will be held with the last attorney or agent made of record.

*****

In 37 CFR 1.33(c), it is indicated which correspondence address is to be normally used to direct correspondence to the patent owner. In most instances, this will be the address of the first named, most recent attorney or agent of record in the patent file, at his or her current address. As a general rule, the attorney-client relationship terminates when the purpose for which the attorney was employed is accomplished; e.g., the issuance of a patent to the client. However, apart from the attorney-client relationship, the Office has, by regulation, 37 CFR 10.23(c)(8), made it the responsibility of every "practitioner," by virtue of his/her registration, "to inform a client or <u>former client</u> ... of correspondence received from the Office ... when the correspondence (i) could have a significant effect on a matter pending before the Office, (ii) is received by the practitioner on behalf of a client or former client, and (iii) is correspondence of which a reasonable practitioner would believe under the circumstances the client or former client should be notified." (Emphasis added.) This responsibility of a practitioner to a former client manifestly is not eliminated by withdrawing as an attorney or agent of record. The practitioner if he/she so desires, can minimize the need for forwarding correspondence concerning issued patents by having the correspondence address changed after the patent issues if the correspondence address is the practitioner's address, which frequently is the case where the practitioner is the attorney or agent of record.

Further, 37 CFR 10.23(c)(8) requires a practitioner to "timely notify the Office of an inability to notify a client or <u>former client</u> of correspondence received from the Office" (Emphasis added.) As the language of this requirement clearly indicates, the duty to notify the Office is a consequence, not of any attorney-client relationship, but rather arises by virtue of the practitioner's status as a registered attorney or agent.

If the patent owner desires that a different attorney or agent receive correspondence, then a new power of attorney must be filed. Correspondence will continue to be sent to the attorney or agent of record in the patent file absent a revocation of the same by the patent owner. If the attorney or agent of record specifies a correspondence address to which correspondence is to be directed, such direction should be followed. However, since a change in the correspondence address does not withdraw a power of attorney, a change of the correspondence address by the patent owner does not prevent the correspondence from being directed to the attorney or agent of record in the patent file under 37 CFR 1.33(c).

Submissions to the Office to change the correspondence address or power of attorney in the record of the patent should be addressed as follows:

Where a request for reexamination has been filed and the reexamination has not yet been assigned to an a Technology Center-

Assistant Commissioner for Patents

Box Reexam

Washington D.C. 20231

Where a request for reexamination has been filed and the reexamination has already been assigned to an a Technology Center-

Assistant Commissioner for Patents

Washington D.C. 20231

Where no request for reexamination has been filed and the patent is in storage-

Commissioner of Patents and Trademarks

ATTN: Document Services Division

Washington D.C. 20231

A sample form for changing correspondence address or power of attorney is set forth below.

ate, correspondence should also be marked for the attention of a

CHANGE OF POWER OF ATTORNEY OR CORRESPONDENCE ADDRESS IN U.S. PATENT

Address to:
Assistant Commissioner for Patents
Washington, D.C. 20231

To the Commissioner of Patents and Trademarks:
In United States patent number ____, granted ____ to ____ (list first inventor) please make the following change:

[ ] 1. Change the address of the attorney(s) of record to:

.....

.....

[ ] 2. Change the correspondence address of the patent owner to:

.....

.....

[ ] 3. Add a power of attorney to, and address any future correspondence to, the first named person below

.....

.....

who I hereby appoint to transact all business in the Patent and Trademark Office.

[ ] *4. Remove all previous powers of attorney which I hereby revoke and enter a power of attorney and address any future correspondence to

.....

.....

It is certified that the person whose signature appears below has the authority to make the requested changes in the patent.

.....

....

Date **Authorized Signature**

[ ] Attorney/Agent Reg. No. _____

[ ] Patent Owner

***Requires signature of patent owner.**

See MPEP § 324 for establishing assignee's right to take action when submitting a power of attorney.

2223 Withdrawal of Attorney or Agent

A request by an attorney or agent of record to withdraw from a patent will normally be approved only if at least 30 days remain in any running period for response. See also MPEP § 402.06.

2224 Correspondence

37 CFR 1.1. Addresses for correspondence with the Patent and Trademark Office.

(a) Except for § 1.1(a)(3) (i) and (ii), all correspondence intended for the Patent and Trademark Office must be addressed to either "Commissioner of Patents and Trademarks, Washington, D.C. 20231" or to specific areas within the Office as set out in paragraphs (a) (1), (2) and (3)(iii) of this section. When appropriparticular office or individual.

(1) *Patent correspondence.* All correspondence concerning patent matters processed by organizations reporting to the Assistant Commissioner for Patents should be addressed to "Assistant Commissioner for Patents, Washington, D.C. 20231."

*****

(c) Requests for reexamination should be additionally marked "Box Reexam."

*****

All requests for reexamination mailed to the U.S. Patent and Trademark Office should be additionally marked "Box Reexam" on the face of the outer envelope. Such mail will be sorted out immediately and processed by the reexamination preprocessing staff. The use of "Box Reexam" is limited to the filing of the original request for reexamination. Subsequent correspondence should not be marked "Box Reexam." It should be directed to the Technology Center (TC) art unit indicated on the Office letters. Any correction or change of correspondence address for a United States patent should be addressed to the Office at Box "Patent Address Change."

A request for reexamination may not be sent by facsimile transmission. See 37 CFR 1.6(d)(5).

After the filing of the request for reexamination, any letters sent to the U.S. Patent and Trademark Office relating to a reexamination proceeding should identify the proceeding by the number of the patent undergoing reexamination, the reexamination request control number assigned, TC art unit, and the name of the examiner. The certificate of mailing and transmission procedures (37 CFR 1.8) and "Express Mail" mailing procedure (37 CFR 1.10) may be used to file any paper in an existing reexamination proceeding.

Communications from the U.S. Patent and Trademark Office to the patent owner will be directed to the first named, most recent attorney or agent of record in the patent file at the current address on the Office's register of patent attorneys and agents, or to the patent owner's address if no attorney or agent is of record, 37 CFR 1.33(c).

Amendments and other papers filed on behalf of patent owners must be signed by the patent owners, or the registered attorney or agent of record in the patent file, or any registered attorney or agent acting in a representative capacity under 37 CFR 1.34(a). See MPEP § 2213.

Double correspondence with the patent owners and the attorney or agent normally will not be undertaken by the Office.

Where no correspondence address is otherwise specified, correspondence will be with the most recent attorney or agent made of record by the patent owner.

Note MPEP § 2220 on certificate of service.

2225 Untimely Paper Filed Prior to Order

After filing of a request, no papers other than (1) citations of patents or printed publications under 37 CFR 1.501, (2) another complete request under 37 CFR 1.510, or (3) notifications pursuant to MPEP § 2282, should be filed with the Office prior to the date of the decision on the request for reexamination. Any papers other than those under 37 CFR 1.501 or 1.510 or MPEP § 2282 filed prior to the decision on the request will be returned to the sender by the Technology Center Director without consideration. A copy of the letter accompanying the returned papers will be made of record in the patent file. However, no copy of the returned papers will be retained by the Office. If the submission of the returned papers is appropriate later in the proceedings, they will be accepted by the Office at that time. See *Patlex Corp. v. Mossinghoff*, 771 F.2d 480, 226 USPQ 985, 989 (Fed. Cir. 1985); *In re Knight*, 217 USPQ 294 (Comm'r Pat. 1982) and *In re Amp Inc.*, 212 USPQ 826 (Comm'r Pat. 1981).

2226 Initial Processing of Request

The opening of all mail marked "Box Reexam," and all initial clerical processing of requests for reexamination, will be performed by the reexamination preprocessing staff in the Office of Patent Legal Administration, Central Reexamination Unit.

2227 Incomplete Request

37 CFR 1.510. Request for ex parte reexamination.

*****

(c) If the request does not include the fee for requesting reexamination or all of the parts required by paragraph (b) of this section, the person identified as requesting reexamination will be so notified and given an opportunity to complete the request within a specified time. If the fee for requesting reexamination has been paid but the defect in the request is not corrected within the specified time, the determination whether or not to institute reexamination will be made on the request as it then exists. If the fee

for requesting reexamination has not been paid, no determination will be made and the request will be placed in the patent file as a citation if it complies with the requirements of § 1.501(a).

(d) The filing date of the request is:

(1) The date on which the request including the entire fee for requesting reexamination is received in the Patent and Trademark Office; or

(2) The date on which the last portion of the fee for requesting reexamination is received.

*****

If the required fee under 37 CFR 1.20(c)(l) is not paid in full, the request is incomplete, 37 CFR 1.510(c), and will not be considered on its merits or have a notice of its filing announced in the *Official Gazette*. The request is considered to have a "filing date" under 37 CFR 1.510(d) only when the entire fee is paid. Until the entire fee is received, no control number or filing date will be assigned and technically, no reexamination exists.

If no fee is received, or only a portion of the fee is received, the reexamination preprocessing staff of the Office of Patent Legal Administration, Central Reexamination Unit (CRU) will notify the requester of the defect and give the requester a specified time, normally 1 month, to complete the request. This notice does not enter the system. A telephone call may also be made to the requester indicating the amount of the insufficient fee. If the request is not timely completed, any partial fee will be returned by the CRU to the requester along with a notice that the reexamination request has not been accepted and the process has been terminated. If the request otherwise complies with 37 CFR 1.501(a), it will be treated as a citation under 37 CFR 1.501(a). If the request does not comply with 37 CFR 1.501(a), the request papers will be returned to the requester by the CRU.

2228 Informal Request

If the fee under 37 CFR 1.20(c)(l) has been paid, but the request does not contain all the elements called for by 37 CFR 1.510(b), the request is considered to be informal. All requests which are accompanied with the entire fee will be assigned a filing date from which the 3-month period for making a decision on the request will be computed. Notice of filing of all complete requests will be published in the *Official Gazette*, approximately 4-5 weeks after filing.

The reexamination preprocessing staff of the Central Reexamination Unit will attempt to notify the requester of any informality in the request in order to give the requester time to respond before a decision is made on the request. If the requester does not respond and correct the informality, the decision on the request will be made on the information presented. If the information presented does not present "a substantial new question of patentability," the request for reexamination will be denied.

2229 Notice of Request in *Official Gazette*

37 CFR 1.11. Files open to the public.

*****

(c) All requests for reexamination for which the fee under § 1.20(c) has been paid, will be announced in the *Official Gazette*. Any reexaminations at the initiative of the Commissioner pursuant to § 1.520 will also be announced in the *Official Gazette*. The announcement shall include at least the date of the request, if any, the reexamination request control number or the Commissioner initiated order control number, patent number, title, class and subclass, name of the inventor, name of the patent owner of record, and the examining group to which the reexamination is assigned.

(d) All papers or copies thereof relating to a reexamination proceeding which have been entered of record in the patent or reexamination file are open to inspection by the general public, and copies may be furnished upon paying the fee therefor.

*****

Under 37 CFR 1.11(c), both reexamination requests with sufficient fees and Commissioner-initiated orders made without a request will be announced in the *Official Gazette*. The reexamination preprocessing staff of the Central Reexamination Unit (CRU) will complete a form with the information needed to print the notice. The forms are forwarded at the end of each week to the Office of Publications for printing in the *Official Gazette*.

In addition, a record of requests filed will be located in the Patent Search Room and in the reexamination preprocessing area of the CRU. Office personnel may use the PALM system to determine if a request for reexamination has been filed in a particular patent. The *Official Gazette* notice will appear in the notice section of the *Official Gazette* under the heading of Reexamination Requests Filed and will include the name of any requestor along with the other items set forth in 37 CFR 1.11(c).

2230 Constructive Notice to Patent Owner

In some instances, it may not be possible to deliver mail to the patent owner because no current address is available. If all efforts to correspond with the patent owner fail, the reexamination proceeding will proceed without actual notice to the patent owner. The publication in the *Official Gazette* of (1) the notice of the filing of a request for reexamination, or (2) the ordering of reexamination at the initiative of the Commissioner, will serve as constructive notice to the patent owner in such an instance.

2231 Processing of Request Corrections

Any payment of insufficient request filing fee should be marked "Box Reexam" so that the fee may be promptly forwarded to the reexamination preprocessing area of the Office. If the fee payment completes the payment of the required fee, the request will be processed, notice will be published in the *Official Gazette,* and the request will be forwarded to the appropriate Technology Center (TC) for determination.

Any correction of a defect other than the fee should be directed to the TC where the file is located, after the reexamination has been assigned to a TC. The TC technical support staff will process any timely corrections and enter them in the file of the reexamination.

2232 Public Access

Reexamination files are normally NOT open to inspection by the general public until the file has been scanned into the reexamination database in the Central Reexamination Unit (CRU), at which point an electronic copy of the file is made available to the public. A Reexamination Processing System (REPS) terminal is available to the public in the Patent Search Room for accessing/copying reexamination files from the reexamination database. Access is free, and copies are 25 cents per page.

The reexamination files that have been scanned into the reexamination database include an entry in the case contents in PALM of "SCNR" each time that incoming and/or outgoing paper is scanned into the database.

While copying of the physical reexamination file is not permitted (since an electronic copy of the file is made available to the public), reexamination files will be made available only for inspection, and in the area of the Office in which they are located.

The reexamination files will be stored in a separate central location (or other designated storage area) in the Technology Center (TC) unless being acted upon by the examiner or a communication is being processed by the group technical support staff. In view of the statutory requirement to conduct the reexamination proceeding with special dispatch and because of other special circumstances, a reexamination file may *NOT* be available to the public for inspection, even if the file has been scanned at the following times:

(A) The reexamination file is not available to the public when it is in the reexamination preprocessing area of the CRU. This is because the request papers are being actively processed and compiled into the reexamination file wrapper. Further, the reexamination file has not yet been captured as a permanent record in the USPTO electronic scanning database;

(B) The reexamination file is not available to the public when it is actively being processed, e.g., when the examiner has started consideration of some matter but an action has not been mailed. However, all areas should be as reasonable as possible in allowing inspection (but not copying) of the file;

(C) The reexamination file is not available to the public once the reexamination file has been released and forwarded by the TC for publication of the reexamination certificate. This would include any reexamination files which have been selected for a quality review check at the Office of Patent Quality Review, as well as during the post-issuance review process in the Office of Patent Legal Administration (see MPEP § 2289). Unless prosecution is reopened, the reexamination files are not available to the public until the reexamination certificate issues. This is because the reexamination file has been put into a special format for printing purposes, and it contains special checklists needed for printing purposes which are not part of the record.

At times other than those identified above, unscanned reexamination files will normally be made available to members of the public upon request. Inspection will be permitted in the TC. If a copy of the reexamination file is requested, it may be ordered from the Document Services Division of the Office of

Public Records (OPR), or ordered via e-mail from: dsd@uspto.gov, and the cost of the copy may be charged to a credit card or deposit account. Alternatively, a copy may be ordered from the scanned database in the Patent Search Room.

SALE OF COPIES OF REEXAMINATION REQUESTS

Copies of reexamination requests, all cited references, and the file wrapper and contents of the patent file for which reexamination is requested are available at the standard charge per page. Alternatively, a copy of a file wrapper may be put on a CD, for a standard fee. The current fee is $200 for a copy of a file wrapper put on CD. Furthermore, requests for copies may be sent via e-mail to: dsd@uspto.gov, and the cost of the copy may be charged to a credit card or deposit account. Orders for such copies must indicate the control number assigned the reexamination request. Orders should be addressed as follows: Box 10 Commissioner of Patents and Trademarks, Washington, DC 20231, Attention: Document Services Division of OPR.

A certified copy of a reexamination file may be purchased from the Document Services Division of OPR.

TO DETERMINE ON PALM IF A REEXAMINATION REQUEST HAS BEEN FILED FOR A GIVEN PATENT NUMBER

Assume Patent Number Is 4104156:

—Clear PALM Terminal
—Key In: 3110 and Press Send
—When Screen Fills
Enter: PAT NO. 4104156 (In Family Name)
Press: TAB
Enter: $ (In Given Name)
Press: TAB
Enter: Y
Press: TRANSMIT

Any reexamination for the patent number will be listed on the return screen. This information can also be obtained from PALM Intranet by checking the continuity data for a given patent number.

There will be about a ten (10) day lag between filing and data entry.

2233 Processing in Technology Center

The working groups in the Technology Centers (TCs) have designated the legal instrument examiners to act as reexamination clerks, as part of their assigned duties, and thus to perform those clerical duties and responsibilities in the groups which are unique to reexamination. The TC Special Program Examiners (SPREs) and Paralegal Specialists have the responsibility to oversee clerical processing and serve as a resource for questions.

FEES

Under reexamination, there are generally no fees due other than for the request and any appeal, brief, and oral hearing fees under 37 CFR 1.191, 1.192, and 1.194(b). No fees are required for additional claims added, for an extension of time under 37 CFR 1.550(c) (37 CFR 1.136 is not available in reexamination), or for issue of the certificate. Any petitions filed under 35 U.S.C. 133 or 37 CFR 1.182 or 1.183 relating to a reexamination proceeding require fees (37 CFR 1.17(h) and (l)). Small entity reductions are available to the patent owner for the 35 U.S.C. 133 petition fee, appeal, brief, and oral hearing fees. Small entity reductions in fees are not available for the reexamination filing fee nor for petition fees for petitions filed under 37 CFR 1.182 and 1.183. When a fee is required in a merged proceeding (see MPEP § 2283 and § 2285), only a single fee is needed even though multiple copies of the submissions (one for each file) are required.

MAILING

A transmittal form with the requester's address will be used to forward copies of Office actions to the requester. Whenever an Office action is issued, a copy of this form will be made and attached to a copy of the Office action. The use of this form removes the need to retype the requester's address each time a mailing is required. When the patent owner is the requester, no such form is needed.

The following steps should be taken when processing reexamination requests in the TCs.

(A) Report receipt of the reexamination file in the TC on the PALM terminal and forward the file to the TC reexamination clerk.

(B) Date stamp the date of receipt in the TC on the reexamination file.

(C) Charge file on the PALM terminal to the supervisory patent examiner (SPE) of the TC art unit indicated on the reexamination file and forward the file to the supervisory patent examiner.

(D) The SPE promptly reviews the subject matter of the patent in which reexamination was requested and either transfers the request file (which should rarely occur) or assigns it to a patent examiner other than the examiner who was involved in the examination of the patent application (see MPEP § 2236). The patent examiner is informed and the request file is returned to the TC reexamination clerk for entry of the examiner's name into PALM.

(E) At about 6 weeks after the filing of the request, the request file should be given to the examiner and charged to him or her on PALM.

(F) The examiner then drafts a decision on the request and returns it to be typed on a "special" basis, normally within 8 weeks after the filing date of the request.

(G) The typed decision is forwarded to the examiner for review. The examiner will sign the action (if the examiner is a primary examiner) or forward the action to the SPE for signature (if examiner is not a primary examiner). After signing, the file is returned to the TC technical support staff for mailing and PALM update, normally within 10 weeks after the filing date of the request.

The initial reexamination files were patent application files which had orange tape applied to the face. The current reexamination file wrappers are orange in color for easy identification.

2234 Entry of Amendments

37 CFR 1.121. Manner of making amendments in application.

*****

(i) *Amendments in reexamination proceedings:* Any proposed amendment to the description and claims in patents involved in reexamination proceedings in both *ex parte* reexaminations filed under § 1.510 and *inter partes* reexaminations filed under § 1.913 must be made in accordance with § 1.530(d)-(j).

*****

37 CFR 1.530. Statement by patent owner in ex parte reexamination; amendment by patent owner in ex parte or inter partes reexamination; inventorship change in ex parte or inter partes reexamination.

*****

(d) *Making amendments in a reexamination proceeding.* A proposed amendment in an *ex parte* or an *inter partes* reexamination proceeding is made by filing a paper directing that proposed specified changes be made to the patent specification, including the claims, or to the drawings. An amendment paper directing that proposed specified changes be made in a reexamination proceeding may be submitted as an accompaniment to a request filed by the patent owner in accordance with § 1.510(e), as part of a patent owner statement in accordance with paragraph (b) of this section, or, where permitted, during the prosecution of the reexamination proceeding pursuant to § 1.550(a) or § 1.937.

(1) *Specification other than the claims.* Changes to the specification, other than to the claims, must be made by submission of the entire text of an added or rewritten paragraph including markings pursuant to paragraph (f) of this section, except that an entire paragraph may be deleted by a statement deleting the paragraph, without presentation of the text of the paragraph. The precise point in the specification must be identified where any added or rewritten paragraph is located. This paragraph applies whether the amendment is submitted on paper or compact disc (*see* §§ 1.96 and 1.825).

(2) *Claims.* An amendment paper must include the entire text of each patent claim which is being proposed to be changed by such amendment paper and of each new claim being proposed to be added by such amendment paper. For any claim changed by the amendment paper, a parenthetical expression "amended," "twice amended," *etc.*, should follow the claim number. Each patent claim proposed to be changed and each proposed added claim must include markings pursuant to paragraph (f) of this section, except that a patent claim or proposed added claim should be canceled by a statement canceling the claim, without presentation of the text of the claim.

(3) *Drawings.* Any change to the patent drawings must be submitted as a sketch on a separate paper showing the proposed changes in red for approval by the examiner. Upon approval of the changes by the examiner, only new sheets of drawings including the changes and in compliance with § 1.84 must be filed. Amended figures must be identified as "Amended," and any added figure must be identified as "New." In the event a figure is canceled, the figure must be surrounded by brackets and identified as "Canceled."

(4) The formal requirements for papers making up the reexamination proceeding other than those set forth in this section are set out in § 1.52.

(e) *Status of claims and support for claim changes.* Whenever there is an amendment to the claims pursuant to paragraph (d) of this section, there must also be supplied, on pages separate from the pages containing the changes, the status (*i.e.*, pending or canceled), as of the date of the amendment, of all patent claims and of all added claims, and an explanation of the support in the disclosure of the patent for the changes to the claims made by the amendment paper.

(f) *Changes shown by markings.* Any changes relative to the patent being reexamined which are made to the specification, including the claims, must include the following markings:

(1) The matter to be omitted by the reexamination proceeding must be enclosed in brackets; and

(2) The matter to be added by the reexamination proceeding must be underlined.

(g) *Numbering of patent claims preserved.* Patent claims may not be renumbered. The numbering of any claims added in the reexamination proceeding must follow the number of the highest numbered patent claim.

(h) *Amendment of disclosure may be required.* The disclosure must be amended, when required by the Office, to correct inaccuracies of description and definition, and to secure substantial correspondence between the claims, the remainder of the specification, and the drawings.

(i) *Amendments made relative to patent.* All amendments must be made relative to the patent specification, including the claims, and drawings, which are in effect as of the date of filing the request for reexamination.

(j) *No enlargement of claim scope.* No amendment may enlarge the scope of the claims of the patent or introduce new matter. No amendment may be proposed for entry in an expired patent. Moreover, no amendment, other than the cancellation of claims, will be incorporated into the patent by a certificate issued after the expiration of the patent.

(k) *Amendments not effective until certificate.* Although the Office actions will treat proposed amendments as though they have been entered, the proposed amendments will not be effective until the reexamination certificate is issued.

*****

Amendments which comply with 37 CFR 1.530(d) through (j) are entered in the reexamination file wrapper. An amendment is given a Paper No. and is designated by consecutive letters of the alphabet (A, B, C, etc.).

The amendment will be entered by drawing a line in red ink through (1) any claim(s) or paragraph(s) amended and (2) the claim(s) or paragraph(s) canceled which are not part of the patent, and the substituted copy being indicated by reference letter. Canceled claim(s) or paragraph(s) which are part of the patent should not be lined through, but rather marked with brackets (i.e., a bracket placed at the beginning and end of each canceled claim or paragraph of the patent). Patent claims must not be renumbered, and the numbering of the claims added during reexamination must follow the number of the highest numbered patent claim.

ALL amendments in reexamination proceedings, including examiner's amendments made at the time when the Notice of Intent to Issue Reexamination Certificate (NIRC) is prepared (37 CFR 1.121(g) does not apply in reexamination proceedings), must be presented in the form of a full copy of the text of each claim which is amended and each paragraph of the description which is amended. In other words, the entire claim or paragraph must be presented for any amendment of the claim or paragraph.

If a portion of the text is amended more than once, each amendment should indicate *ALL* of the changes (insertions and deletions) in relation to the current text of the patent under reexamination.

Although amendments will be entered for purposes of examination, the amendments are not legally effective until the reexamination certificate is issued.

See MPEP § 2250 for manner of making amendments by patent owner and for examples of proper claim amendment format. For clerical handling of amendments, see MPEP § 2270. See also MPEP § 2221 for amendments included in the request by the patent owner. For entry of amendments in a merged proceeding, see MPEP § 2283 and § 2285.

2235 Record Systems

PALM — MONITORING SYSTEMS

The Patent Application Locating and Monitoring (PALM) system is used to support the reexamination process. The sections below delineate PALM related activities.

(A) *Reexamination File Data on PALM* — The routine PALM retrieval transactions are used to obtain data on reexamination files. The user keys in the retrieval transaction code (2952, 2962, etc.) the reexamination series code (90) and the reexamination control number. Almost all data displayed for reexamination files has the same meaning as for regular patent applications. Two changes should be noted. In the first named applicant location (normally upper left corner, abbreviation APPL), the patent number being reexamined will appear for reexamination files. For a patent undergoing reexamination the number of the proceeding can be determined on the 2953 retrieval screen. The pertinent reexamination number(s) will appear in the "Details" section of the screen as a six digit number preceded by an "R". If no "R" number is present then no reexamination has been filed.

Reexamination file data can also be retrieved using PALM Intranet by entering the reexamination control number in the space provided for an application number.

(B) *Reexamination File Location Control* — The location of a reexamination file is monitored in the same manner as regular patent application files. All PALM transactions are equally applicable to regular patent applications and reexamination files.

(C) *Patent File Location Control* — The movement of patent files related to requests for reexamination throughout the Office is monitored by the PALM system in the normal fashion. Within the Technology Centers (TCs), the reexamination file and patent file will be kept together, from initial receipt until the reexamination is assigned to an examiner for determination. At this point, the patent file will be charged to the examiner assigned the reexamination file (use transaction 1036) and will be kept in the examiner's room until the proceeding is terminated. After the reexamination proceeding has been terminated, the patent file should be forwarded with the reexamination file to the Office of Publications via the appropriate office. Publishing Division will forward the patent file and the reexamination file to the Record Room after printing of the certificate.

(D) *Reporting Events to* PALM — The PALM system is used to monitor major events that take place in processing reexamination proceedings. During initial processing all major pre-*ex parte* examination events are reported. During the *ex parte* phase the mailing of examiner's actions are reported as well as owner's responses thereto. The TC reexamination clerk is responsible for reporting these events using the bar code reader (BCR) initiated 2920 cathode-ray tube (CRT) update screen display. The events that will be reported are as follows:

(1) Determination Mailed — Denial of request for reexamination.

(2) Determination Mailed — Grant of request for reexamination.

(3) Petition for reconsideration of determination received.

(4) Decision on petition mailed — Denied.

(5) Decision on petition mailed — Granted.

(6) Owner response to determination (owner's statement) received.

(7) Requester response to determination (requester's reply) received.

(8) The mailing of all examiner actions.

The receipt of owner's responses to examiner's actions and Office receipt date.

Each of these events, as well as additional events reported by the Reexamination Preprocessing Unit will be permanently recorded and displayed in the "Contents" portion of PALM. In addition, status representative of these events will also be displayed.

(E) *Status Reports* — Various weekly "tickler" reports can be generated for each TC given the event reporting discussed above. The primary purpose of these computer outputs is to assure that reexaminations are, in fact, processed with "special dispatch."

(1) *PALM Reports* — A number of automated reports generated from the PALM system are provided to the TCs at the beginning of each week. These reports serve to indicate to the TCs when certain deadlines are approaching. Each report is subdivided by TC working group and lists the requests in control number sequence. The following reports have been identified.

(2) *Requests Not Yet Received in TC* — This report serves to indicate to a TC those requests assigned to it for which preprocessing has not been completed and which have not yet been received in the TC. This report provides an indicator of future workload as well as identifying potential, problem stragglers.

(3) *Requests Not Yet Assigned to an Examiner* — This report serves to highlight those requests which have not been assigned to an examiner by the 6th week since their filing. Requests appearing on this report should be located and docketed immediately.

(4) *Requests Which Should Be Taken Up for Determination* — This report lists those requests which have been assigned to an examiner and in which no determination has been mailed and the 6th week since their filing is past. Requests on this report should be taken up for determination by the examiner.

(5) *Requests for Which Determinations Should be Prepared* — This report lists those requests which have been assigned to an examiner and in which no determination has been mailed and the 2nd month since their filing is past. Determinations for requests on this report should be in the final stages of preparation.

(6) **Requests for Which Determinations Should Have Been Mailed* — This report lists those requests which have been assigned to an examiner and in which no determination has been mailed and the 10th week since their filing is past. Determinations for requests on this report should be mailed immediately.

(7) **Overdue Determinations* — This report lists those requests in which no determination has been mailed and the 3rd week since their filing is past. This report should always be zero.

(8) *Overdue Petitions for Reconsideration of a Denial* — This report lists those requests in which the determination denied reexamination and no petition has been received and 6 weeks have passed since the determination was mailed. Requests on this report should be terminated.

(9) *Overdue Owner Responses to Determinations* — This report lists those requests in which the determination ordered reexamination and the owner has not filed a response and 10 weeks have passed since the mailing of the determination. These requests should be taken up for immediate *ex parte* action by the examiner.

(10) *Overdue Requester Responses to Statements* — This report lists those requests in which a proper OWNER statement was received and NO requester reply has been received and 10 weeks have passed since the receipt of the owner response. These requests should be taken up for immediate action.

(11) **Overdue First Ex Parte Actions* — This report lists those requests in which reexamination has been ordered and a first action has not been mailed and 6 weeks have passed since the request became available for *ex parte* prosecution. These requests should be taken up for immediate action by the examiner.

(12) **Overdue Action or Examiner's Answer* — This report lists those reexaminations which are up for second or subsequent action by the examiner and no such action has been mailed and 2 months have passed since the filing of an owner response to a previous action.

(13) **Overdue Advisory Action* — This report lists those reexaminations which are up for action by the examiner and no such action has been mailed and 1 month has passed since the filing of an owner response to a previous final action.

(14) **Overdue Owner Response* — This report lists those requests in which there has been an action rendered and 4 months have passed without an owner response.

(15) **Overdue Certificates* — This report lists those requests in which a Notice of Intent to Issue a Reexamination Certificate has been mailed and 3 months have passed since its mailing and no issue date has been assigned.

(16) **Requests With Prolonged Prosecution* — This report lists pending requests which have not matured into a certificate and 15 months have passed since the date of filing.

*Asterisk items require immediate action and follow-up, if appropriate.

(F) *Historical Reporting* — A variety of historical reports are possible given the event recording described above. Thus, such statistics as the number of requests filed and determinations made in a specified period or number or kind of reexaminations in which an appeal was filed can be made available.

2236 Assignment of Reexamination

Reexamination requests should normally be assigned to the art unit which examines the class and subclass in which the patent to be reexamined is currently classified as an original. In that art unit, the Supervisory Patent Examiner (SPE) will assign the reexamination request to a primary examiner, other than the examiner who originally examined the patent application (see "Examiner Assignment Policy" below), who is most familiar with the claimed subject matter of the patent. When no such knowledgeable primary examiner is available, the reexamination may be assigned to an assistant examiner. In such an instance the SPE must sign all actions and take responsibility for all actions taken.

EXAMINER ASSIGNMENT POLICY

It is the policy of the Office that the SPE will assign the reexamination request to an examiner different from the examiner(s) who examined the patent application. Thus, under normal circumstances, the reexamination request will not be assigned to an SPE, primary examiner, or assistant examiner who was involved in any part of the examination of the patent

for which reexamination is requested (e.g., by preparing/signing an action). Exceptions to this general policy include cases where the SPE is the only primary examiner in the art unit, or where the original examiner is the only examiner with adequate knowledge of the relevant technology to examine the case. In the unusual case where there is a need to assign the request to the original examiner, the assignment must be approved by the Technology Center (TC) Director, and the fact that such approval was given by the TC Director must be stated by the examiner in the decision on the request for reexamination.

CONSEQUENCES OF INADVERTENT ASIGNMENT TO AN "ORIGINAL EXAMINER"

Should a reexamination be inadvertently assigned to an "original examiner" (in a situation where the TC Director's approval is not stated in the decision on the request), the patent owner or the third party requester who objects must promptly file a paper alerting the Office of this fact. Any request challenging the assignment of an examiner to the case must be made within two months of the first Office action or other Office communication indicating the examiner assignment, or reassignment will not be considered. Reassignment of the reexamination to a different examiner will be addressed on a case-by-case basis. In no event will the assignment to the original examiner, by itself, be grounds for vacating any Office decision(s) or action(s) and "restarting" the reexamination.

2237 Transfer Procedure

Although the number of reexamination requests which must be transferred should be very small, the following procedures have been established for an expeditious resolution of any such problems.

No transfer inquiry forms (PTO-447A) should be used in reexamination situations. The supervisory patent examiner (SPE) to whose art unit the reexamination has been assigned should, when transfer is desired, hand-carry the patent file to the SPE of the art unit to which a transfer is desired. Any conflict which cannot be resolved by the supervisory patent examiners will be resolved by the TC Directors involved.

If the "new" art unit accepts assignment of the reexamination request, the "new" SPE assigns the request to an examiner, and the "new" TC's reexamination clerk PALMs in the request. In addition, the Offices of the Special Program Examiner for both TCs must be notified of the transfer by the respective SPEs.

2238 Time Reporting

CLERICAL TIME REPORTING

Both the Program Management System (PMS) and Payroll systems now used to monitor clerical time have been modified to report reexamination activities. Time devoted to processing actual reexamination files in the Technology Centers (TCs) should be reported using the appropriate PMS Code and Project Code. It should be noted that all clerical time consumed by reexamination activities must be reported in the above manner. Such activities as supervision, copying, typing, and docketing should be included.

PROFESSIONAL TIME REPORTING

(A) Reexamination fees are based on full cost recovery and it is essential that all time expended on reexamination activities be reported accurately. Thus, directors, supervisory patent examiners (SPEs), examiners and members of the Board of Patent Appeals and Interferences should report time spent on reexamination on their individual Time and Attendance Report using the following Project Codes:

119051 — Used to report all activities related to a specific reexamination proceeding up until the time *ex parte* prosecution is begun.

119052 — Used to report all activities related to a specific reexamination proceeding from the time it is taken up for first, *ex parte*, action until the issuance of a certificate takes place.

Examiners and SPEs will use the above codes to report their time for reexamination activities on the Examiner's Biweekly Time Worksheet (PTO-690E) by making appropriate entries in the Item 16 space.

Time reported using codes 119051 and 119052 will also be reported in the Examiner Production System as "Other" time.

(B) TC Special Program Examiners and paralegals will use 1407-30 as the code to report their time for reexamination activities on the Biweekly Time Worksheet Paralegal/Special Program Examiner (PTO-690 P/S).

2239 Reexamination Ordered at the Commissioner's Initiative

37 CFR 1.520. Ex parte reexamination at the initiative of the Commissioner.

The Commissioner, at any time during the period of enforceability of a patent, may determine whether or not a substantial new question of patentability is raised by patents or printed publications which have been discovered by the Commissioner or which have been brought to the Commissioner's attention, even though no request for reexamination has been filed in accordance with § 1.510 or § 1.913. The Commissioner may initiate *ex parte* reexamination without a request for reexamination pursuant to § 1.510 or § 1.913. Normally requests from outside the Office that the Commissioner undertake reexamination on his own initiative will not be considered. Any determination to initiate *ex parte* reexamination under this section will become a part of the official file of the patent and will be mailed to the patent owner at the address as provided for in § 1.33(c).

The Commissioner may initiate reexamination without a request being filed and without a fee being paid. Such reexamination may be ordered at any time during the period of enforceability of the patent.

The decision to order reexamination at the Commissioner's initiative is normally made by the Deputy Commissioner for Patent Examination Policy after a review of all the facts concerning the patent. It may also be made by the Commissioner of Patents and Trademarks, the Deputy Commissioner or the Assistant Commissioner for Patents. The number of such Commissioner-initiated orders is expected to be very small.

If an Office employee becomes aware of an unusual fact situation in a patent which he or she considers to clearly warrant reexamination, a memorandum setting forth these facts (including a proposed rejection of all appropriate claims) along with the patent file and any prior patents or printed publications should be forwarded to the Deputy Commissioner for Patent Examination Policy through the supervisory chain of command. A disk having the memorandum in electronic format should be included with the paper copy of the memorandum.

If an order to reexamine is to be issued, the decision is prepared in the Office of Patent Legal Administration (OPLA). The decision is signed by the Deputy Commissioner for Patent Examination Policy and mailed by the OPLA. The patent file is then forwarded to the reexamination preprocessing staff for preparation of the reexamination file and *Official Gazette* notice.

After the reexamination preprocessing staff of the Central Reexamination Unit (CRU) has completed its preparation of the reexamination file, the file will be forwarded to the appropriate Technology Center (TC). Examination and prosecution will then proceed without further communication with anyone but the patent owner.

If the Deputy Commissioner for Patent Examination Policy refuses to issue an order for reexamination, no record of any consideration of the matter will be placed in the patent file and the patent owner will not be notified.

The Commissioner will not normally consider requests to order reexamination at the Commissioner's initiative received from members of the public. If a member of the public desires reexamination, a request and fee should be filed in accordance with 37 CFR 1.510.

2240 Decision on Request

35 U.S.C. 303. Determination of issue by Director.

(a) Within three months following the filing of a request for reexamination under the provisions of section 302 of this title, the Director will determine whether a substantial new question of patentability affecting any claim of the patent concerned is raised by the request, with or without consideration of other patents or printed publications. On his own initiative, and any time, the Director may determine whether a substantial new question of patentability is raised by patents and publications discovered by him or cited under the provisions of section 301 of this title.

(b) A record of the Director's determination under subsection (a) of this section will be placed in the official file of the patent, and a copy promptly will be given or mailed to the owner of record of the patent and to the person requesting reexamination, if any.

(c) A determination by the Director pursuant to subsection (a) of this section that no substantial new question of patentability has been raised will be final and nonappealable. Upon such a determination, the Director may refund a portion of the reexamination fee required under section 302 of this title.

37 CFR 1.515. Determination of the request for ex parte reexamination.

(a) Within three months following the filing date of a request for an *ex parte* reexamination, an examiner will consider the request and determine whether or not a substantial new question of patentability affecting any claim of the patent is raised by the request and the prior art cited therein, with or without consideration of other patents or printed publications. The examiner's determination will be based on the claims in effect at the time of the determination, will become a part of the official file of the

patent, and will be mailed to the patent owner at the address as provided for in § 1.33(c) and to the person requesting reexamination.

(b) Where no substantial new question of patentability has been found, a refund of a portion of the fee for requesting *ex parte* reexamination will be made to the requester in accordance with § 1.26(c).

(c) The requester may seek review by a petition to the Commissioner under § 1.181 within one month of the mailing date of the examiner's determination refusing *ex parte* reexamination. Any such petition must comply with § 1.181(b). If no petition is timely filed or if the decision on petition affirms that no substantial new question of patentability has been raised, the determination shall be final and nonappealable.

Before making a determination on the request for reexamination, the examiner must request a litigation computer search by the Scientific and Technical Information Center (STIC) to check if the patent has been, or is, involved in litigation. The "Litigation Review" box on the reexamination file wrapper should be completed to indicate that the review was conducted and the results thereof. A copy of the STIC search should be hole-punched and placed on the right side of the reexamination file. In the rare instance where the record of the reexamination proceeding or the STIC search indicates that additional information is desirable, guidance as to making an additional litigation search may be obtained from the library of the Office of the Solicitor. If the patent is or was involved in litigation, and a paper referring to the court proceeding has been filed, reference to the paper by number should be made in the "Litigation Review" box as "litigation; see paper #1C". If a litigation records search is already noted on the file, the examiner need not repeat or update it.

If litigation has concluded or is taking place in the patent on which a request for reexamination has been filed, the request must be promptly brought to the attention of the Technology Center (TC) Director (or the TC Special Program Examiner, where the TC Director has delegated this review to him or her), who should review the decision on the request and any examiner's action to ensure that it conforms to the current Office litigation policy and guidelines. See MPEP § 2286.

35 U.S.C. 303 requires that within 3 months following the filing of a request for reexamination, the Commissioner will determine whether or not the request raises a "substantial new question of patentability" affecting any claim of the patent of which reexamination is desired. See also MPEP § 2241. Such a determination may be made with or without consideration of other patents or printed publications in addition to those cited in the request. No input from the patent owner is considered prior to the determination, unless the patent owner filed the request. See *Patlex Corp. v. Mossinghoff*, 771 F.2d 480, 226 USPQ 985 (Fed. Cir. 1985).

The patent claims in effect at the time of the determination will be the basis for deciding whether a substantial new question of patentability has been raised. 37 CFR 1.515(a). Amendments which (1) have been presented with the request if by the patent owner, (2) have been filed in a pending reexamination proceeding in which the certificate has not been issued, or (3) have been submitted in a reissue application on which no reissue patent has been issued, will not be considered or commented upon when deciding requests.

The decision on the request for reexamination has as its object either the granting or denial of an order for reexamination. This decision is based on whether or not "a substantial new question of patentability" is found. A final determination as to unpatentability of the claims is not made in the decision; this determination will be made during the examination stage of the reexamination proceedings. Accordingly, no *prima facie* case of unpatentability need be found to grant an order for reexamination. If a decision to deny an order for reexamination is made, the requester may seek review by a petition under CFR 1.181. See 37 CFR 1.515(c). Where there have been prior decisions relating to the patent, see MPEP § 2242.

It is only necessary to establish that a substantial new question of patentability exists as to any one of the patent claims in order to order reexamination. In the examination stage of the reexamination, normally all patent claims will be reexamined, even where the order has made a finding of a substantial new question for less than all of the patent claims. However, where there has been a prior Federal Court decision as to some claims, see MPEP § 2242. The decision on the request should discuss ALL patent claims in order to inform the patent owner of the examiner's position, so that a response thereto may be made in the patent owner's statement.

The examiner should indicate, insofar as possible, his or her initial position on all the issues identified in

the request or by the requester so that comment thereon may be received in the patent owner's statement and in the requester's reply. However, the examiner **SHOULD NOT** make any rejection of the claims in the order for reexamination.

The Commissioner of Patents and Trademarks has the authority to order reexamination only in those cases which raise a substantial new question of patentability. The substantial new question of patentability requirement protects patentees from having to respond to, or participate in unjustified reexaminations. *Patlex Corp. v. Mossinghoff*, 771 F.2d 480, 226 USPQ 985 (Fed. Cir. 1985).

SECOND OR SUBSEQUENT REQUEST FILED DURING REEXAMINATION

If a second or subsequent request for reexamination is filed (by any party) while a reexamination is pending, the presence of a substantial new question of patentability depends on the prior art cited by the second or subsequent requester. If the requester includes in the second or subsequent request prior art which raised a substantial new question in the pending reexamination, reexamination should generally be ordered. This is because the prior art which raised a substantial new question of patentability resulting in an order for reexamination continues to raise a substantial new question of patentability until the pending reexamination is concluded. However, in aggravated situations, upon petition by the patent owner under 37 CFR 1.182, where it appears clear that the second or subsequent request was filed for purposes of harassment of the patent owner, the request should be denied. The grant of such a request would unduly prolong the conclusion of the pending reexamination and be inconsistent with the requirement that reexamination proceeding be conducted with special dispatch. If the second or subsequent requester does not include the prior art which raised a substantial new question of patentability in the pending reexamination, reexamination may or may not be ordered depending on whether the different prior art raises a substantial new question of patentability. The second or subsequent request should be determined on its own merits without reference to the pending reexamination.

For cases in which a reexamination is pending at the time a second or subsequent request for reexamination is to be decided, see MPEP § 2283.

2241 Time for Deciding Request

The determination whether or not to reexamine must be made within 3 months following the filing date of a request. See 35 U.S.C. 303(a) and 37 CFR 1.515(a). The examiner should take up a request for decision about 6 weeks after the request was filed. The decision should be mailed within 10 weeks of the filing date of the request. When reexamination for the same patent has already been ordered based on an earlier request and that reexamination is pending, the examiner should immediately take up the new request for decision, i.e., there should be no delay of 6 weeks. See the last portion of MPEP § 2240 and also see MPEP § 2283 for multiple copending reexamination proceedings. A determination to reexamine may be made at any time during the period of enforceability of a patent.

2242 Criteria for Deciding Request

SUBSTANTIAL NEW QUESTION OF PATENTABILITY

The presence or absence of "a substantial new question of patentability" determines whether or not reexamination is ordered. The meaning and scope of the term "a substantial new question of patentability" is not defined in the statute and must be developed to some extent on a case-by-case basis, using the case law to provide guidance as will be discussed in this section.

If the prior art patents and printed publications raise a substantial question of patentability of at least one claim of the patent, then a substantial <u>new</u> question of patentability is present, unless the same question of patentability has already been decided by (1) a final holding of invalidity by a Federal Court, or (2) by the Office in a previous examination of the patent. A "previous examination of the patent" is: (1) the original examination of the application which matured into the patent; (2) the examination in a reissue application that has resulted in a reissue of the patent; or (3) an earlier concluded reexamination. The answer to the question of whether a "substantial new question of patentability" exists, and therefore whether reexamination may be had, is decided by the Commissioner,

and, as 35 U.S.C. 303 provides, that determination is final, i.e., not subject to appeal on the merits of the decision. See *In re Etter*, 756 F.2d 852, 225 USPQ 1 (Fed. Cir. 1985). But see *Heinl v. Godici*, 143 F.Supp.2d 593, 596-98 (E.D.Va. 2001) (35 U.S.C. 303 addresses only USPTO decisions to deny a request for reexamination and does not bar review of USPTO decisions to grant reexamination requests. However, a decision to grant a reexamination request is not a final agency decision and is not ordinarily subject to judicial review.).

A prior art patent or printed publication raises a substantial question of patentability where there is a substantial likelihood that a reasonable examiner would consider the prior art patent or printed publication important in deciding whether or not the claim is patentable. In making a determination whether to reexamine a patent based on a request, the examiner should consider the prior art patents and/or printed publications to determine if there is a substantial likelihood that a reasonable examiner would consider them important. If the prior art patents and/or publications would be considered important, then the examiner should find "a substantial new question of patentability" unless the same question of patentability has already been decided as to the claim in a final holding of invalidity by a Federal court or by the Office in a previous examination. For example, the same question of patentability may have already been decided by the Office where the examiner finds the additional prior art patents or printed publications are merely cumulative to similar prior art already fully considered by the Office in a previous examination of the claim.

For "a substantial new question of patentability" to be present, it is only necessary that: (1) the prior art patents and/or printed publications raise a substantial question of patentability regarding at least one claim, i.e., the teaching of the (prior art) patents and printed publications is such that a reasonable examiner would consider the teaching to be <u>important</u> in deciding whether or not the claim is patentable; and (2) the same question of patentability as to the claim has not been decided by the Office in a previous examination of the patent or in a final holding of invalidity by the Federal Courts in a decision on the merits involving the claim. It is not necessary that a "*prima facie*" case of unpatentability exist as to the claim in order for "a substantial new question of patentability" to be present as to the claim. Thus, "a substantial new question of patentability" as to a patent claim could be present even if the examiner would not necessarily reject the claim as either fully anticipated by, or obvious in view of, the prior patents or printed publications. As to the importance of the difference between "a substantial new question of patentability" and a "*prima facie*" case of unpatentability see generally *In re Etter*, 756 F.2d 852, 857 n.5, 225 USPQ 1, 4 n.5 (Fed. Cir. 1985).

In order to further clarify the meaning of "a substantial new question of patentability" certain situations are outlined below which, if present, should be considered when making a decision as to whether or not "a substantial new question of patentability" is present.

POLICY IN SPECIFIC SITUATIONS

A. *Prior Favorable Decisions by the U.S. Patent and Trademark Office (Office) on the Same or Substantially Identical Prior Art in Relation to the Same Patent.*

A "substantial new question of patentability" is not raised by prior art presented in a reexamination request if the Office has previously considered (in an earlier examination of the patent) the same question of patentability as to a patent claim favorable to the patent owner based on the same prior art patents or printed publications. *In re Recreative Technologies*, 83 F.3d 1394, 38 USPQ2d 1776 (Fed. Cir. 1996).

In determining the presence or absence of "a substantial new question of patentability," the consideration to be given to prior art patents and printed publications cited in an earlier examination is controlled by *In re Portola Packaging Inc.*, 110 F.3d 786, 42 USPQ2d 1295 (Fed. Cir. 1997).

See the guidelines below for reviewing requests for reexaminations and ongoing reexaminations for compliance with the *Portola Packaging* decision. Note also *In re Hiniker Co.*, 150 F.3d 1362, 1367, 47 USPQ2d 1523, 1527 (Fed. Cir. 1998) (Court held the reexamination proceeding was supported by a substantial new question of patentability where the rejection before the court was based on a combination of art that had been before the examiner during the

original prosecution, and art newly cited during the reexamination proceeding.).

1. Explanation of Portola Packaging

In order for the Office to conduct reexamination, prior art must raise a "substantial new question of patentability." See 35 U.S.C. 304. In *Portola Packaging*, the Federal Circuit held that a combination of two references that were relied upon individually to reject claims during the prosecution of the application which matured into the patent does not raise a substantial new question of patentability in a subsequent reexamination of the patent. During the original prosecution of the application which led to the patent, the Office had rejected the claims separately based upon the Hunter and Faulstich references. However, the Office never applied the references in combination. During reexamination, Portola Packaging amended the patent claims, and for the first time the Office rejected the amended patent claims based upon the Hunter and Faulstich references in combination. Despite these facts, the Federal Circuit determined that the Office was precluded from conducting reexamination on those references, either alone or in combination. The Court explained that "a rejection made during reexamination does not raise a substantial new question of patentability if it is supported only by prior art previously considered by the PTO." 110 F.3d at 791, 42 USPQ2d at 1300.110 F.3d at 790, 42 USPQ2d at 1299. The Federal Circuit also held that an amendment of the claims during reexamination does not justify using old prior art alone to raise a substantial new question of patentability. 110 F.3d at 791, 42 USPQ2d at 1299.

2. General Principles Governing Compliance With Portola Packaging

If prior art was previously relied upon to reject a claim in a prior related Office proceeding, the Office will not order or conduct reexamination based only on such prior art. Prior related Office proceedings include the application which matured into the patent that is being reexamined, any reissue application for the patent, and any reexamination proceeding for the patent.

If prior art was not relied upon to reject a claim, but was cited in the record of a prior related Office proceeding, and its relevance to the patentability of any claim was actually discussed on the record, the Office will not order or conduct reexamination based on only such prior art. The relevance of the prior art to patentability may have been discussed by either the applicant, patentee, examiner, or any third party. However, 37 CFR 1.2 requires that all Office business be transacted in writing. Thus, the Office cannot presume that a prior art reference was previously relied upon or discussed in a prior Office proceeding if there is no basis in the written record to so conclude other than the examiner's initials or a check mark on a PTO 1449 form, or equivalent, submitted with an information disclosure statement. Thus, any specific discussion of prior art must appear on the record of a prior related Office proceeding. However, generalized statements such as the prior art is "cited to show the state of the art," "cited to show the background of the invention," or "cited of interest" would not preclude reexamination.

The Office may order and conduct reexamination based on prior art that was cited but whose relevance to patentability of the claims was not discussed in any prior related Office proceeding.

3. Procedures for Determining Whether a Reexamination May be Ordered in Compliance With Portola Packaging

Office personnel must adhere to the following procedures when determining whether a reexamination may be ordered in compliance with the Federal Circuit's decision in *Portola Packaging*:

(A) Read the reexamination request to identify the prior art on which the request is based.

(B) Conduct any necessary search of the prior art relevant to the subject matter of the patent for which reexamination was requested. See 35 U.S.C. 303 ("On his own initiative, and any time, the Commissioner may determine whether a substantial new question of patentability is raised by patents and publication discovered by him. . . ."); see also MPEP § 2244 ("If the examiner believes that additional prior art patents and publications can be readily obtained by searching to supply any deficiencies in the prior art cited in the request, the examiner can perform such an additional search.").

(C) Read the prosecution histories of all prior related Office proceedings.

(D) Determine if the prior art in the reexamination request and the prior art found in any search was: (1) relied upon to reject any claim in a prior related Office proceeding; or (2) cited and its relevance to patentability of any claim discussed in a prior related Office proceeding.

(E) Deny the reexamination request if the decision to order reexamination would be based only on prior art that was, in a prior related Office proceeding, (1) relied upon to reject any claim, and/or (2) cited and its relevance to patentability of any claim discussed. See *Portola Packaging, Inc.*, 110 F.3d at 790, 42 USPQ2d at 1299 (examiner presumed to have done his/her job). There may be unusual fact patterns and evidence which suggest that the examiner did not consider the prior art that was discussed in the prior Office proceeding. These cases should be brought to the attention of the Technology Center (TC) Director. For a discussion of the treatment of such cases, see section 5 below.

(F) Order reexamination if the decision to order reexamination would be based at least in part on prior art that was, in a prior related Office proceeding, neither (1) relied upon to reject any claim, nor (2) cited and its relevance to patentability of any claim discussed and a substantial new question of patentability is raised with respect to any claim of the patent. If not specified, a reexamination generally includes all claims. However, reexamination may be limited to specific claims. See 35 U.S.C. 304 (authorizing the power to grant reexamination for determination of a "substantial new question of patentability affecting *any* claim of a patent.") (emphasis added). Thus, the Commissioner may order reexamination confined to specific claims. However, reexamination is not necessarily limited to those questions set forth in the reexamination order. See 37 CFR 1.104(a) ("The examination shall be complete with respect both to compliance of the application or patent under reexamination with the applicable statutes and rules and to the patentability of the invention as claimed.").

4. Procedures for Determining Whether an Ongoing Reexamination Must Be Terminated in Compliance With Portola Packaging

Office personnel must adhere to the following procedures when determining whether any current or future ongoing reexamination should be terminated in compliance with the Federal Circuit's decision in *Portola Packaging*:

(A) Prior to making any rejection in an ongoing reexamination, determine for any prior related Office proceeding what prior art was (1) relied upon to reject any claim or (2) cited and discussed.

(B) Base any and all rejections of the patent claims under reexamination at least in part on prior art that was, in any prior related Office proceeding, neither (1) relied upon to reject any claim, nor (2) cited and its relevance to patentability of any claim discussed.

(C) Withdraw any rejections based only on prior art that was, in any prior related Office proceeding, previously either (1) relied upon to reject any claim, or (2) cited and its relevance to patentability of any claim discussed.

(D) Terminate reexaminations in which the only remaining rejections are entirely based on prior art that was, in any prior related Office proceeding, previously (1) relied upon to reject any claim, and/or (2) cited and its relevance to patentability of a claim discussed. The Commissioner may conduct a search for new art to determine whether a substantial new question of patentability exists prior to terminating any ongoing reexamination proceeding. See 35 U.S.C. 303. See also 35 U.S.C. 305 (indicating that "reexamination will be conducted according to the procedures established for initial examination," thereby suggesting that the Commissioner may conduct a search during an ongoing reexamination proceeding).

5. Application of Portola Packaging to Unusual Fact Patterns

The Office recognizes that each case must be decided on its particular facts and that cases with unusual fact patterns will occur. In such a case, the reexamination should be brought to the attention of the TC Director who will then determine the appropriate action to be taken.

Unusual fact patterns may appear in cases in which prior art was relied upon to reject any claim or cited and discussed with respect to the patentability of a claim in a prior related Office proceeding, but other evidence clearly shows that the examiner did not appreciate the issues raised in the reexamination request or the ongoing reexamination with respect to that art. Such other evidence may appear in the

reexamination request, in the nature of the prior art, in the prosecution history of the prior examination, or in an admission by the patent owner, applicant, or inventor. See 37 CFR 1.104(c)(3). The following examples are intended to be illustrative and not inclusive.

For example, if a textbook was cited during prosecution of the application which matured into the patent, the record of that examination may show that only select information from the textbook was discussed with respect to the patentability of the claims. The file history of the prior Office proceeding should indicate which portion of the textbook was previously considered. See 37 CFR 1.98(a)(2)(ii) (an information disclosure statement must include a copy of each "publication or *that portion* which caused it to be listed") (emphasis added). If a subsequent reexamination request relied upon other information in the textbook that actually teaches what is required by the claims, it may be appropriate to rely on this other information in the textbook to order and/or conduct reexamination. However, a reexamination request that merely provides a new interpretation of a reference already previously relied upon or actually discussed by the Office does not create a substantial new question of patentability.

Another example involves the situation where an examiner discussed a reference in a prior Office proceeding, but did not either reject a claim based upon the reference or maintain the rejection based on the mistaken belief that the reference did not qualify as prior art. For example, the examiner may not have believed that the reference qualified as prior art because: (i) the reference was undated or was believed to have a bad date; (ii) the applicant submitted a declaration believed to be sufficient to antedate the reference under 37 CFR 1.131; or (iii) the examiner attributed an incorrect filing date to the claimed invention. If the reexamination request were to explain how and why the reference actually does qualify as prior art, it may be appropriate to rely on the reference to order and/or conduct reexamination. For example, the request could: (i) verify the date of the reference; (ii) undermine the sufficiency of the declaration filed under 37 CFR 1.131; or (iii) explain the correct filing date accorded a claim. See e.g., *Heinl v. Godici*, 143 Supp.2d 593 (E.D.Va. 2001) (reexamination on the basis of art previously presented without adequate proof of date may proceed if prior art status established).

Another example involves foreign language prior art references. If a foreign language prior art reference was cited and discussed in any prior Office proceeding but the foreign language prior art reference was never completely and accurately translated into English during the original prosecution, *Portola Packaging* may not prohibit reexamination over a complete and accurate translation of that foreign language prior art reference. Specifically, if a reexamination request were to explain why a more complete and accurate translation of that same foreign language prior art reference actually teaches what is required by the patent claims, it may be appropriate to rely on the foreign language prior art reference to order and/or conduct reexamination.

Another example of an unusual fact pattern involves cumulative references. To the extent that a cumulative reference is repetitive of a prior art reference that was previously applied or discussed, *Portola Packaging* may prohibit reexamination of the patent claims based only on the repetitive reference. For purposes of reexamination, a cumulative reference that is repetitive is one that substantially reiterates verbatim the teachings of a reference that was either previously relied upon or discussed in a prior Office proceeding even though the title or the citation of the reference may be different. However, it is expected that a repetitive reference which cannot be considered by the Office during reexamination will be a rare occurrence since most references teach additional information or present information in a different way than other references, even though the references might address the same general subject matter.

6. Notices Regarding Compliance With Portola Packaging

(A) If a request for reexamination is denied under 3(E) above in order to comply with the Federal Circuit's decision in *Portola Packaging*, the notice of reexamination denial should state: "This reexamination request is denied based on *In re Portola Packaging, Inc.*, 110 F.3d 786, 42 USPQ2d 1295 (Fed. Cir. 1997). No patentability determination has been made in this reexamination proceeding."

(B) If an ongoing reexamination is terminated under 4(D) above in order to comply with the Federal

Circuit's decision in *Portola Packaging*, the Notice of Intent to Issue a Reexamination Certificate should state: "This reexamination is terminated based on *In re Portola Packaging, Inc.*, 110 F.3d 786, 42 USPQ2d 1295 (Fed. Cir. 1997). No patentability determination has been made in this reexamination proceeding."

(C) If a rejection in the reexamination has previously been issued and that rejection is withdrawn under 4(C) above in order to comply with the Federal Circuit's decision in *Portola Packaging*, the Office action withdrawing such rejection should state: "The rejection is withdrawn in view of *In re Portola Packaging, Inc.*, 110 F.3d 786, 42 USPQ2d 1295 (Fed. Cir. 1997). No patentability determination of the claims of the patent in view of such prior art has been made in this reexamination proceeding." If multiple rejections have been made, the Office action should clarify which rejections are being withdrawn.

B. Prior Adverse Decisions by the Office on the Same or Substantially Identical Prior Art in the Same Patent.

A prior decision adverse to the patentability of a claim of a patent by the Office based upon prior art patents or printed publications would usually mean that "a substantially new question of patentability" is present. Such an adverse decision by the Office could, for example, arise from a reissue application which was abandoned after rejection of the claim and without disclaiming the patent claim.

C. Prior Adverse Reissue Application Final Decision by the Commissioner or the Board of Patent Appeals and Interferences Based Upon Grounds Other Than Patents or Printed Publications.

Any prior adverse final decision by the Commissioner, or the Board of Patent Appeals and Interferences, on an application seeking to reissue the same patent on which reexamination is requested will be considered by the examiner when determining whether or not a "substantial new question of patentability" is present. To the extent that such prior adverse final decision was based upon grounds other than patents or printed publications, the prior adverse final decision will not be a basis for determining whether or not a "substantial new question of patentability" is present.

D. Prior Favorable or Adverse Decisions on the Same or Substantially Identical Prior Patents or Printed Publications in Other Cases not Involving the Patent.

While the Office would consider decisions involving substantially identical patents or printed publications in determining whether a "substantial new question of patentability" is raised, the weight to be given such decisions will depend upon the circumstances. For example, if the Office has used the same or substantially identical prior art to reject the same or substantially identical claims in another application or patent under reexamination, this would be considered as being controlling in making a determination. Similarly, if a foreign patent office or a foreign court has used the same or substantially identical prior art to reject or invalidate the same or substantially identical claims, this would be weighted heavily in making the determination. Likewise, if a United States Court has invalidated similar claims in another patent based on the same or substantially identical prior patents or printed publications, this would be considered as being controlling in making the determination. Favorable decisions on the same or substantially identical prior patents or printed publications in other cases would be considered but would not be controlling.

POLICY WHERE A FEDERAL COURT DECISION HAS BEEN ISSUED ON THE PATENT

A. Final Court Holding of Validity.

When the initial question as to whether the prior art raises a substantial new question of patentability as to a patent claim is under consideration, the existence of a final court decision of claim *validity* in view of the same or different prior art does not necessarily mean that no new question is present, because of the different standards of proof employed by the Federal District Courts and the Office. While the Office may accord deference to factual findings made by the district court, the determination of whether a substantial new question of patentability exists will be made independently of the court's decision on validity, because it is not controlling on the Office.

B. Nonfinal Court Holding of Invalidity or Unenforceability.

A *nonfinal* holding of claim *invalidity* or unenforceability will not be controlling on the question of whether a substantial new question of patentability is present.

C. Final Court Holding of Invalidity or Unenforceability.

A *final* holding of claim *invalidity* or unenforceability is controlling on the Office. In such cases, a substantial new question of patentability would *not* be present as to the claims finally held invalid or unenforceable.

As to *A.* - *C.* above, see *Ethicon v. Quigg*, 849 F.2d 1422,7 USPQ2d 1152 (Fed. Cir. 1988).

Any situations requiring clarification should be brought to the attention of the Office of Patent Legal Administration.

2243 Claims Considered in Deciding Request

The claims in effect at the time of the determination will be the basis for deciding whether "a substantial new question of patentability" is present. 37 CFR 1.515(a). While the examiner will ordinarily concentrate on those claims for which reexamination is requested, the finding of "a substantial new question of patentability" can be based upon a claim of the patent other than the ones for which reexamination is requested. For example, the request might seek reexamination of particular claims, but the examiner is not limited to those claims and can make a determination that "a substantial new question of patentability" is present as to other claims in the patent without necessarily finding "a substantial new question" with regard to the claims requested. If a substantial new question of patentability is found as to any claim, reexamination will be ordered and will normally cover all claims except where some claims have been finally held invalid in a Federal Court decision on the merits. The decision should discuss all patent claims in order to inform the patent owner of the examiner's position. See MPEP § 2242 for patent claims which have been the subject of a prior decision. Amendments or new claims will not be considered or commented upon when deciding a request.

2244 Prior Art on Which the Determination Is Based

The determination whether or not "a substantial new question of patentability" is present can be based upon any prior art patents or printed publications. Section 303(a) of the statute and 37 CFR 1.515(a) provide that the determination on a request will be made "with or without consideration of other patents or printed publications," i.e., other than those relied upon in the request. The examiner is not limited in making the determination to the patents and printed publications relied on in the request. The examiner can find "a substantial new question of patentability" based upon the prior art patents or printed publications relied on in the request, a combination of the prior art relied on in the request and other prior art found elsewhere, or based entirely on different patents or printed publications. The primary source of patents and printed publications used in making the determination are those relied on in the request. However, subject to the *Portola Packaging* and *Recreative Technologies* limitations discussed in MPEP § 2242, the examiner can also consider the prior art of record in the patent file from the earlier examination or a reexamination and any patents and printed publications of record in the patent file from submissions under 37 CFR 1.501 which are in compliance with 37 CFR 1.98 in making the determination. If the examiner believes that additional prior art patents and publications can be readily obtained by searching to supply any deficiencies in the prior art cited in the request, the examiner can perform such an additional search. Such a search should be limited to that area most likely to contain the deficiency of the prior art previously considered and should be made only where there is a reasonable likelihood that prior art can be found to supply any deficiency necessary to "a substantial new question of patentability."

The determination should be made on the claims in effect at the time the decision is made (37 CFR 1.515(a)).

The Commissioner of Patents and Trademarks has the authority to order reexamination only in those cases which raise a substantial new question of patentability. The substantial new question of patentability requirement protects patentees from having to respond to, or participate in unjustified

reexaminations. See, e.g., *Patlex Corp. v. Mossinghoff*, 771 F.2d 480, 226 USPQ 985 (Fed. Cir. 1985).

2245 Processing of Decision

After the examiner has prepared the decision and proofread and signed the typed version, the reexamination file and decision are given to the Technology Center's (TC's) reexamination clerk for coordinating the clerical processing carried out by the technical support staff.

The technical support staff then prints the heading on the decision by using the computer terminal. If the request was made by a third party, the technical support staff makes 3 copies of any prior art documents not already supplied by or to the patent owner or requester. If the patent owner filed the request, only 2 copies are required.

A copy of the decision is then mailed to the patent owner and to any third party, along with any required copies of prior art documents. The original signed copy of the decision and a copy of any prior art enclosed is made of record in the reexamination file.

The reexamination file is then returned to the special storage area in the TC.

2246 Decision Ordering Reexamination

35 U.S.C. 304. Reexamination order by Director.

If, in a determination made under the provisions of subsection 303(a) of this title, the Director finds that a substantial new question of patentability affecting any claim of a patent is raised, the determination will include an order for reexamination of the patent for resolution of the question. The patent owner will be given a reasonable period, not less than two months from the date a copy of the determination is given or mailed to him, within which he may file a statement on such question, including any amendment to his patent and new claim or claims he may wish to propose, for consideration in the reexamination. If the patent owner files such a statement, he promptly will serve a copy of it on the person who has requested reexamination under the provisions of section 302 of this title. Within a period of two months from the date of service, that person may file and have considered in the reexamination a reply to any statement filed by the patent owner. That person promptly will serve on the patent owner a copy of any reply filed.

37 CFR 1.525. Order for ex parte reexamination.

(a) If a substantial new question of patentability is found pursuant to § 1.515 or § 1.520, the determination will include an order for *ex parte* reexamination of the patent for resolution of the question. If the order for *ex parte* reexamination resulted from a petition pursuant to § 1.515(c), the *ex parte* reexamination will ordinarily be conducted by an examiner other than the examiner responsible for the initial determination under § 1.515(a).

(b) The notice published in the *Official Gazette* under § 1.11(c) will be considered to be constructive notice and *ex parte* reexamination will proceed.

If the request is granted, the examiner will conclude that a substantial new question of patentability has been raised by identifying all claims and issues, the patents or printed publications relied on, and a brief statement of the rationale supporting each new question.

In the examiner's decision, the examiner must identify at least one substantial new question of patentability and explain how the prior art patents or printed publications raise such a question. The examiner should indicate, insofar as possible, his or her initial position on all the issues identified in the request or by the requester (without rejecting claims) so that comment thereon may be received in the patent owner's statement and in the requester's reply. The prior art relied on should be listed on a form PTO-892 if it is not already listed on a form PTO-1449 by the requester. A copy of a reference should be supplied only where it has not been previously supplied to the patent owner and requester.

As to each substantial new question of patentability identified in the decision, the decision should point out:

(A) The prior patents and printed publications which add some new teaching as to at least one claim;

(B) What that new teaching is;

(C) The claims that the new teaching is directed to;

(D) That the new teaching was not previously considered nor addressed in the prior examination of the patent or a final holding of invalidity by the Federal Courts;

(E) That the new teaching is such that a reasonable examiner would consider the new teaching to be important in deciding to allow the claim being considered; and

(F) Where the question is raised, or where it is not clear that a patent or printed publication pre-dates the patent claims, a discussion should be provided as to why the patent or printed publication is in fact available against the patent claims.

See MPEP § 2247.01 for an example of a decision granting a request for reexamination.

In a simple case, the examiner may adopt the reasons provided by the requester in the discussion of the substantial new question of patentability.

In the decision on the request, the examiner will not decide, and no statement should be made as to, whether the claims are rejected over the patents and printed publications. The examiner does not decide on the question of patentability of the claims in the decision on the request. The examiner only decides whether there is a substantial new question of patentability to grant the request to order reexamination.

If arguments are presented as to grounds not based on the patents or printed publications, such as those based on public use or sale, or abandonment under 35 U.S.C. 102(c), the examiner should note that such grounds are improper for reexamination and are not considered or commented upon. See 37 CFR 1.552(c).

The decision granting the request is made on a decision form and must set forth the time periods for the patent owner and requester to file their statement and any reply thereto.

The wording of form paragraph 22.01 should be used at the end of each decision letter.

¶ 22.01 New Question of Patentability

A substantial new question of patentability affecting claim **[1]** of United States Patent Number **[2]** is raised by the request for reexamination.

Extensions of time under 37 CFR 1.136(a) will not be permitted in these proceedings because the provisions of 37 CFR 1.136 apply only to "an applicant" and not to parties in a reexamination proceeding. Additionally, 35 U.S.C. 305 requires that reexamination proceedings "will be conducted with special dispatch" (37 CFR 1.550(a)). Extension of time in reexamination proceedings are provided for in 37 CFR 1.550(c).

Upon determination that a substantial new question of patentability is present, either pursuant to a request under 35 U.S.C. 302 and 37 CFR 1.515, or a *sua sponte* determination under 35 U.S.C. 303(a), second sentence, and 37 CFR 1.520, the Commissioner issues an order to reexamine. The statutory wording is that:

> [T]he determination [that a substantial new question of patentability is raised] will include an order for reexamination of the patent for resolution of the question. [35 U.S.C. 304, first sentence]

PETITION TO VACATE THE ORDER GRANTING REEXAMINATION

A substantive determination by the Commissioner to institute reexamination pursuant to a finding that the prior art patents or printed publications raise a substantial new question of patentability is not subject to review by the courts until a final agency decision in the reexamination proceeding has issued. See *Joy Mfg. Co. v. Nat'l Mine Serv. Co., Inc.*, 810 F.2d 1127, 1 USPQ2d 1627 (Fed. Cir. 1987); *Heinl v. Godici*, 143 Supp.2d 593 (E.D.Va. 2001). Note further the decision of *Patlex Corp. v. Quigg*, 6 USPQ2d 1296, 1298 (D.D.C. 1988) (the legislative scheme leaves the Commissioner's 35 U.S.C. 303 determination entirely to his or her discretion and not subject to judicial review until a final agency decision on the reexamination proceeding has issued). Accordingly, neither the patent owner nor the requester has a right to petition, or request reconsideration of, a finding that prior art patents or printed publications raise a substantial new question after a request for reexamination is granted. There is no right to petition such a finding after a request for reexamination is granted even if the finding of a substantial new question is based on reasons other than those urged by the requester (or based on less than all the grounds urged by the requester). Where the examiner determines that a date of a reference is early enough such that the reference constitutes prior art, that determination is not petitionable (with respect to vacating the examiner's finding of a substantial new question). Where the examiner determines that a reference is a printed publication (i.e., that the criteria for publication has been satisfied), that determination is also not petitionable. These matters cannot be questioned with respect to vacating the order granting reexamination until a final agency decision on the reexamination proceeding has issued. Rather, these matters can be argued by the patent owner and appealed during the examination phase of the reexamination proceeding.

A petition under 37 CFR 1.181 may, however, be filed to vacate an *ultra vires* reexamination order, such as where the order for reexamination is not based on prior art patents and printed publications. In cases where no discretion to grant a request for reexamination exists, a petition to vacate the decision to grant, or a request for reconsideration, will be entertained. "Appropriate circumstances" under 37 CFR

1.181(a)(3) exist to vacate the order granting reexamination where, for example:

(A) the reexamination order is not based on prior patents or printed publications;

(B) all claims of the patent were held to be invalid by a final decision of a Federal Court;

(C) reexamination was ordered for the wrong patent;

(D) reexamination was ordered based on a duplicate copy of the request; or

(E) the reexamination order is based wholly on prior art previously considered in an earlier concluded examination of the patent by the Office (e.g., the application which matured into the patent, a prior reexamination, an interference proceeding).

As to (E) above, the decisions of *In re Hiniker Co.*, 150 F.3d 1362, 47 USPQ2d 1523 (Fed. Cir. 1998), *In re Portola Packaging Inc.*, 110 F.3d 786, 42 USPQ2d 1295 (Fed. Cir. 1997), and *In re Recreative Technologies Corp.*, 83 F.3d 1394, 38 USPQ2d 1776 (Fed. Cir. 1996) are to be noted. See the discussion in MPEP § 2242 as to the criteria for vacating a reexamination order in view of the decisions.

When a petition under 37 CFR 1.181 is filed to vacate an reexamination order, the third party requester (where one is present in the reexamination proceeding) may file a single submission in opposition to the petition. Because reexamination proceedings are conducted with special dispatch, 35 U.S.C. 305, any such opposition by the third party requester must be filed within two weeks of the date upon which a copy of the original 37 CFR 1.181 petition was served on the third party requester to ensure consideration. It is advisable that, upon receipt and review of the served copy of such a 37 CFR 1.181 petition which the third party requester intends to oppose, the requester should immediately place a courtesy telephone call to the Special Program Examiner in the Technology Center in which the reexamination proceeding is pending to notify the Office that an opposition to the 37 CFR 1.181 petition will be filed. Whenever possible, filing of the opposition should be submitted by facsimile transmission.

The filing of a 37 CFR 1.181 petition to vacate an *ultra vires* reexamination order is limited to a single submission, even if an opposition thereto is filed by a third party requester.

PRIOR ART SUBMITTED AFTER THE ORDER

Any prior art citations under 37 CFR 1.501 submitted after the date of the decision on the order should be retained in a separate file by the reexamination clerk and stored until the reexamination proceeding is terminated, at which time the prior art citation is then entered of record on the patent file. See MPEP § 2206.

2247 Decision on Request for Reexamination, Request Denied

The request for reexamination will be denied if a substantial new question of patentability is not found based on patents or printed publications.

If the examiner concludes that no substantial new question of patentability has been raised, the examiner should indicate, for each patent and printed publication cited in the request, why the citation is:

(A) Cumulative to the teachings of the art cited in the earlier concluded examination of the patent;

(B) Not available against the claims (e.g., the reference is not available as pior art because of its date or the reference is not a publication);

(C) Not important to a reasonable examiner in deciding whether any claim of the patent for which reexamination is requested is patentable even though the citation is not cumulative and the citation is available against the claim; or

(D) One which was cited in the record of the patent and is barred by the guidelines set forth in MPEP § 2242 for reviewing requests for reexaminations and ongoing reexaminations for compliance with *In re Portola Packaging Inc.*, 110 F.3d 786, 42 USPQ2d 1295 (Fed. Cir. 1997), as having been previously considered in an earlier concluded Office examination of the patent.

If a request for reexamination is denied for the reason noted in (D) above, the notice of reexamination denial should include the following statement: "This reexamination request is denied based on *In re Portola Packaging, Inc.*, 110 F.3d 786, 42 USPQ2d 1295 (Fed. Cir. 1997). No patentability determination has been made in this reexamination proceeding."

The examiner should also respond to the substance of each argument raised by the requester which is based on patents or printed publications. If arguments

are presented as to grounds not based on prior patents or printed publications, such as those based on public use or sale, or abandonment under 35 U.S.C. 102(c), the examiner should note that such grounds are improper for reexamination and are not considered or commented upon. See 37 CFR 1.552(c).

See MPEP § 2247.01 for an example of a decision denying a request for reexamination.

A copy of any denied request and the decision thereon are made part of the official patent file.

If the denial of the request is not overturned by a petition decision, a refund will be made to the requester under 37 CFR 1.26(c) after the period for petition has expired.

Use form paragraph 22.02 as the introductory paragraph in a decision denying reexamination.

¶ 22.02 No New Question of Patentability

No substantial new question of patentability is raised by the request for reexamination and prior art cited therein for the reasons set forth below.

2247.01 Examples of Decisions on Request for Reexamination

Examples of decisions on requests are provided below.

Example (1): Decision Granting Request for Reexamination.

UNITED STATES DEPARTMENT OF COMMERCE
Patent and Trademark Office
Address: COMMISSIONER OF PATENTS AND TRADEMARKS
Washington, D.C. 20231

CONTROL NUMBER	FILING DATE	PATENT UNDER REEXAMINATION	ATTORNEY DOCKET NO.
90/999,999	09/09/99	9,999,999	999

EXAMINER: Kenneth Schor

William Dyre
2400 Any Street Road
Anytown, VA 22202

ART UNIT	PAPER NUMBER
3725	3

DATE MAILED
09/14/99

ORDER GRANTING/DENYING REQUEST FOR REEXAMINATION

The request for reexamination has been considered. Identification of the claims, the references relied on, and the rationale supporting the determination are attached.

Attachment(s) ☐ PTO-892. ☐ PTO-1449. ☐ Other: _____

1. ☒ The request for reexamination is GRANTED.

RESPONSE TIMES ARE SET TO EXPIRE AS FOLLOWS:

For Patent Owner's Statement (optional): TWO MONTHS from the mailing date hereof. 37 CFR 1.530(b). **EXTENSIONS OF TIME ARE GOVERNED BY 37 CFR 1.550(c).**

For Requester's reply (optional): TWO MONTHS from the date of service of any patent owner's statement. 37 CFR 1.535. **NO EXTENSION OF TIME IS PERMITTED.** If patent owner does not file a timely statement under 37 CFR 1.530(b), no reply by requester is permitted.

2. ☐ The request for reexamination is DENIED.

This decision is not appealable. 35 U.S.C. 303(c). Requester may seek review by petition to the Commissioner within ONE MONTH from the mailing date hereof. 37 CFR 1.515(c). **EXTENSIONS OF TIME ONLY UNDER 37 CFR 1.183.**

In due course, a refund under 37 CFR 1.26(c) will be made to requester (listed below if not patent owner) ☐ by Treasury check ☐ by credit to Deposit Account No. _____ unless notified otherwise. 35 U.S.C. 303(c).

(Third party requester's correspondence address)

John Doe
12 Seemore Street
Any City, New York 1001

DECISION

A substantial new question of patentability affecting Claims 1-3 of United States Patent Number 9,999,999 to Key is raised by the request for reexamination.

Extensions of time under 37 CFR 1.136(a) will not be permitted in these proceedings because the provisions of 37 CFR 1.136 apply only to ''an applicant'' and not to parties in a reexamination proceeding. Additionally, Office policy requires that reexamination proceedings ''will be conducted with special dispatch'' (37 CFR 1.550(a)) and provides for extensions of time in reexamination proceedings as set forth in 37 CFR 1.550(c).

The request indicates that Requester considers that Claims 1-3 are unpatentable over Smith taken with Jones.

The request further indicates that Requester considers that Claim 4 is unpatentable over the Horn publication.

It is agreed that the consideration of Smith raises a substantial new question of patentability as to Claims 1-3 of the Key patent. As pointed out on pages 2-3 of the request, Smith teaches using an extruder supported on springs at a 30 degree angle to the horizontal but does not teach the specific polymer of Claims 1-3 which is extruded. The teaching as to spring-supporting the extruder at 30 degrees was not present in the prosecution of the application which became the Key patent. Further, there is a substantial likelihood that a reasonable examiner would consider this teaching important in deciding whether or not the claim is patentable. Accordingly, Smith raises a substantial new question of patentability as to Claims 1-3, which question has not been decided in a previous examination of the Key patent.

The Horn publication does not raise a new question of patentability as to Claim 4 because its teaching as to the extrusion die is a substantial equivalent of the teaching of the die by the Dorn patent which was considered in the prosecution of the application which became the Key patent. However, Claim 4 will be reexamined along with Claims 1-3 of the Key patent.

Kenneth M. Schor
Primary Examiner, Technology Center 1700

Example (2): Decision Denying Request for Reexamination

UNITED STATES DEPARTMENT OF COMMERCE
Patent and Trademark Office
Address: COMMISSIONER OF PATENTS AND TRADEMARKS
Washington, D.C. 20231

CONTROL NUMBER	FILING DATE	PATENT UNDER REEXAMINATION	ATTORNEY DOCKET NO.
90/999,999	09/09/99	9,999,999	999

EXAMINER: Kenneth Schor

ART UNIT	PAPER NUMBER
3725	3

DATE MAILED
09/14/99

William Dyre
2400 Any Street Road
Anytown, VA 22202

ORDER GRANTING/DENYING REQUEST FOR REEXAMINATION

The request for reexamination has been considered. Identification of the claims, the references relied on, and the rationale supporting the determination are attached.

Attachment(s) ☐ PTO-892. ☐ PTO-1449. ☐ Other: _____

1. ☐ The request for reexamination is GRANTED.

RESPONSE TIMES ARE SET TO EXPIRE AS FOLLOWS:

For Patent Owner's Statement (optional): TWO MONTHS from the mailing date hereof. 37 CFR 1.530(b). **EXTENSIONS OF TIME ARE GOVERNED BY 37 CFR 1.550(c).**

For Requester's reply (optional): TWO MONTHS from the date of service of any patent owner's statement. 37 CFR 1.535. **NO EXTENSION OF TIME IS PERMITTED.** If patent owner does not file a timely statement under 37 CFR 1.530(b), no reply by requester is permitted.

2. ☒ The request for reexamination is DENIED.

This decision is not appealable. 35 U.S.C. 303(c). Requester may seek review by petition to the Commissioner within ONE MONTH from the mailing date hereof. 37 CFR 1.515(c). **EXTENSIONS OF TIME ONLY UNDER 37 CFR 1.183.**

In due course, a refund under 37 CFR 1.26(c) will be made to requester (listed below if not patent owner) ☐ by Treasury check ☐ by credit to Deposit Account No. _____ unless notified otherwise. 35 U.S.C. 303(c).

(Third party requester's correspondence address)

John Doe
12 Seemore Street
Any City, New York 1001

DECISION

No substantial new question of patentability is raised by the request for reexamination and prior art cited therein for the reasons set forth below.

The request indicates that Requester considers that Claims 1-2 are unpatentable over Smith taken with Jones.

The request further indicates that Requester considers that Claim 3 is unpatentable over Smith taken with Jones and when further taken with the Horn publication.

The claims of the Key patent, for which reexamination is requested, require that an extruder be supported on springs at an angle of 30 degrees to the horizontal, while a specific chlorinated polymer is extruded through a specific extrusion die.

The Smith patent does not raise a substantial new question of patentability as to the Key claims. Smith's teaching as to the extruder being spring-supported at 30 degrees is a substantial equivalent of the teaching of same by the Dorn patent which was considered in the prosecution of the application which became the Key patent.

In the request for reexamination, it is argued that Jones teaches the extrusion die. However, Jones was also used in the prosecution of the Key application to teach the extrusion die.

The requests argued that the Horn publication shows the connection of the support means to the extruder via bolts, as recited in Claim 3 of the Key patent. Although this teaching was not provided in the prosecution of the Key application, the teaching would not be considered to be important to a reasonable examiner in deciding whether or not the Key claims are patentable. The use of a bolt instead of a screw (which was taught by the art of record in the Key application) to provide the connection has not been shown in the request to be important in the context of attaching the support means to the extruder.

The references set forth in the request have been considered both alone and in combination. They fail to raise a substantial new question of patentability as to any one of the Key patent claims. Accordingly, the request for reexamination is DENIED.

Kenneth M. Schor
Primary Examiner, Technology Center 1700

2248 Petition From Denial of Request

37 CFR 1.515. Determination of the request for ex parte reexamination.

*****

(c) The requester may seek review by a petition to the Commissioner under § 1.181 within one month of the mailing date of the examiner's determination refusing *ex parte* reexamination. Any such petition must comply with § 1.181(b). If no petition is timely filed or if the decision on petition affirms that no substantial new question of patentability has been raised, the determination shall be final and nonappealable.

PROCESSING OF PETITION UNDER 37 CFR 1.515(c)

Once the request for reexamination has been denied, the reexamination file will be stored in the storage area established by the Technology Center (TC) for reexamination files, to await the possibility of a petition seeking review of the examiner's determination refusing reexamination. If no petition is filed within one (1) month, the file is forwarded to the Office of Finance for a refund. If a petition is filed, it is forwarded (together with the reexamination file) to the office of the TC Director for decision.

Where a petition is filed, the TC Director will review the examiner's determination that a substantial new question of patentability has not been raised. The TC Director's review will be *de novo*. Each decision by the TC Director will conclude with the paragraph:

> This decision is final and nonappealable. 37 CFR 1.515(c). No further communication on this matter will be acknowledged or considered.

If the petition is granted, the decision of the TC Director should include a sentence setting a 2-month period for filing a statement under 37 CFR 1.530; the reexamination file will then be returned to the supervisory patent examiner (SPE) of the art unit that will handle the reexamination for consideration of reassignment to another examiner.

Reassignment will be the general rule. Only in exceptional circumstances where no other examiner is available and capable to give a proper examination, will the case remain with the examiner who denied the request. If the denial of the request was signed by the SPE, the reexamination ordered by the TC Director will be assigned to a primary examiner.

Under normal circumstances, the reexamination proceeding will not be reassigned to a SPE, primary examiner, or assistant examiner who was involved in any part of the examination of the patent for which reexamination is requested. Only where unusual circumstances are found to exist may the TC Director make an exception to this practice and reassign the reexamination proceeding to an examiner involved with the examination of the patent. For example, if the original examiner of the patent and the examiner who issued the denial are the only examiners with adequate knowledge of the relevant technology, the TC Director may permit reassignment of the reexamination proceeding to the examiner that originally examined the patent.

The requester may seek review of a *denial* of a request for reexamination only by petitioning the Commissioner under 37 CFR 1.515(c) and 1.181 within 1 month of the mailing date of the decision denying the request for reexamination. Additionally, any request for an extension of the time period to file such a petition from the denial of a request for reexamination can only be entertained by filing a petition under 37 CFR 1.183 with appropriate fee to waive the time provisions of 37 CFR 1.515(c).

After the time for petition has expired without a petition having been filed, or a petition has been filed and the decision thereon affirms the denial of the request, a partial refund of the filing fee for requesting reexamination will be made to the requester. (35 U.S.C. 303(c) and 37 CFR 1.26(c)). A decision on a petition is final and is not appealable.

Except for the limited exception described in MPEP § 2246, no petition may be filed requesting review of a decision *granting* a request for reexamination, even if the decision grants the request for reasons other than those advanced by the requester or as to claims other than those for which the requester sought reexamination. No right to review exists if reexamination is ordered in such a case because all claims will be reexamined in view of all prior art during the reexamination under 37 CFR 1.550.

2249 Patent Owner's Statement

37 CFR 1.530. Statement by patent owner in ex parte reexamination; amendment by patent owner in ex parte or inter partes reexamination; inventorship change in ex parte or inter partes reexamination.

(a) Except as provided in § 1.510(e), no statement or other response by the patent owner in an *ex parte* reexamination proceeding shall be filed prior to the determinations made in accordance with § 1.515 or § 1.520. If a premature statement or other response is filed by the patent owner, it will not be acknowledged or considered in making the determination.

(b) The order for *ex parte* reexamination will set a period of not less than two months from the date of the order within which the patent owner may file a statement on the new question of patentability, including any proposed amendments the patent owner wishes to make.

(c) Any statement filed by the patent owner shall clearly point out why the subject matter as claimed is not anticipated or rendered obvious by the prior art patents or printed publications, either alone or in any reasonable combinations. Where the reexamination request was filed by a third party requester, any statement filed by the patent owner must be served upon the *ex parte* reexamination requester in accordance with § 1.248.

*****

The patent owner has no right to file a statement subsequent to the filing of the request but prior to the order for reexamination. Any such premature statement will not be acknowledged nor considered by the Office when making the decision on the request. See MPEP § 2225 and *Patlex Corp. v. Mossinghoff*, 771 F.2d 480, 226 USPQ 985 (Fed. Cir. 1985).

If reexamination is ordered, the decision will set a period of not less than 2 months within which period the patent owner may file a statement and any narrowing amendments to the patent claims. If necessary, an extension of time beyond the 2 months may be requested under 37 CFR 1.550(c) by the patent owner. Such request is decided by the TC Director.

Any statement filed must clearly point out why the patent claims are believed to be patentable, considering the cited prior art patents or printed publications alone or in any reasonable combination.

A copy of the statement must be served by the patent owner on the requester, unless the request was filed by the patent owner.

In the event the decision is made to reexamine, 35 U.S.C. 304 provides that the owner will have a period, not less than 2 months, to file a statement directed to the issue of patentability. Since the 2-month period is the minimum provided by statute, first extensions may be granted up to one (1) month based upon good and sufficient reasons. Further extensions should be granted only in the most extraordinary situations; e.g., death or incapacitation of the representative or owner.

Lack of proof of service especially poses a problem where the patent owner fails to indicate that he or she has served the requester in the statement subsequent to the order for reexamination (37 CFR 1.530(c)). In this situation, the Reexamination Clerk should immediately contact the patent owner by telephone to see whether the indication of proof of service was inadvertently omitted from the patent owner's response. If it was, the patent owner should be advised to submit a supplemental paper indicating the manner and date of service on requester. If the patent owner cannot be contacted, the Reexamination Clerk will then contact the requester to verify that service has in fact been made by the patent owner and indicate that acknowledgment of proof of service should accompany requester's reply (37 CFR 1.248(b)(1)). If the 2-month period for response under 37 CFR 1.530 has expired and requester has not been served, the patent owner's statement is considered inappropriate (37 CFR 1.248) and may be denied consideration; see MPEP § 2267.

See also MPEP § 2266.03 for further discussion as to the patent owner providing service on the third party requester.

It should be noted that the period for response by requester for a reply under 37 CFR 1.535 is 2 months from the owner's service date and not 2 months from the date the patent owner's statement was received in the Office.

2250 Amendment by Patent Owner

37 CFR 1.121. Manner of making amendments in application.

*****

(i) *Amendments in reexamination proceedings*: Any proposed amendment to the description and claims in patents involved in reexamination proceedings in both *ex parte* reexaminations filed under § 1.510 and *inter partes* reexaminations filed under § 1.913 must be made in accordance with § 1.530(d)-(j).

37 CFR 1.530. Statement by patent owner in ex parte reexamination; amendment by patent owner in ex parte or inter partes reexamination; inventorship change in ex parte or inter partes reexamination.

*****

(d) *Making amendments in a reexamination proceeding.* A proposed amendment in an *ex parte* or an *inter partes* reexamination proceeding is made by filing a paper directing that proposed specified changes be made to the patent specification, including the claims, or to the drawings. An amendment paper directing that proposed specified changes be made in a reexamination proceeding may be submitted as an accompaniment to a request filed by the patent owner in accordance with § 1.510(e), as part of a patent owner statement in accordance with paragraph (b) of this section, or, where permitted, during the prosecution of the reexamination proceeding pursuant to § 1.550(a) or § 1.937.

(1) *Specification other than the claims.* Changes to the specification, other than to the claims, must be made by submission of the entire text of an added or rewritten paragraph including markings pursuant to paragraph (f) of this section, except that an entire paragraph may be deleted by a statement deleting the paragraph, without presentation of the text of the paragraph. The precise point in the specification must be identified where any added or rewritten paragraph is located. This paragraph applies whether the amendment is submitted on paper or compact disc (*see* §§ 1.96 and 1.825).

(2) *Claims.* An amendment paper must include the entire text of each patent claim which is being proposed to be changed by such amendment paper and of each new claim being proposed to be added by such amendment paper. For any claim changed by the amendment paper, a parenthetical expression "amended," "twice amended," *etc.*, should follow the claim number. Each patent claim proposed to be changed and each proposed added claim must include markings pursuant to paragraph (f) of this section, except that a patent claim or proposed added claim should be canceled by a statement canceling the claim, without presentation of the text of the claim.

(3) *Drawings.* Any change to the patent drawings must be submitted as a sketch on a separate paper showing the proposed changes in red for approval by the examiner. Upon approval of the changes by the examiner, only new sheets of drawings including the changes and in compliance with § 1.84 must be filed. Amended figures must be identified as "Amended," and any added figure must be identified as "New." In the event a figure is canceled, the figure must be surrounded by brackets and identified as "Canceled."

(4) The formal requirements for papers making up the reexamination proceeding other than those set forth in this section are set out in § 1.52.

(e) *Status of claims and support for claim changes.* Whenever there is an amendment to the claims pursuant to paragraph (d) of this section, there must also be supplied, on pages separate from the pages containing the changes, the status (*i.e.*, pending or canceled), as of the date of the amendment, of all patent claims and of all added claims, and an explanation of the support in the disclosure of the patent for the changes to the claims made by the amendment paper.

(f) *Changes shown by markings.* Any changes relative to the patent being reexamined which are made to the specification, including the claims, must include the following markings:

(1) The matter to be omitted by the reexamination proceeding must be enclosed in brackets; and

(2) The matter to be added by the reexamination proceeding must be underlined.

(g) *Numbering of patent claims preserved.* Patent claims may not be renumbered. The numbering of any claims added in the reexamination proceeding must follow the number of the highest numbered patent claim.

(h) *Amendment of disclosure may be required.* The disclosure must be amended, when required by the Office, to correct inaccuracies of description and definition, and to secure substantial correspondence between the claims, the remainder of the specification, and the drawings.

(i) *Amendments made relative to patent.* All amendments must be made relative to the patent specification, including the claims, and drawings, which are in effect as of the date of filing the request for reexamination.

(j) *No enlargement of claim scope.* No amendment may enlarge the scope of the claims of the patent or introduce new matter. No amendment may be proposed for entry in an expired patent. Moreover, no amendment, other than the cancellation of claims, will be incorporated into the patent by a certificate issued after the expiration of the patent.

(k) *Amendments not effective until certificate.* Although the Office actions will treat proposed amendments as though they have been entered, the proposed amendments will not be effective until the reexamination certificate is issued.

*****

Amendments to the patent (one which has not expired) may be filed by the patent owner with his or her request. See MPEP § 2221. Such amendments, however, may not enlarge the scope of a claim of the patent or introduce new matter. Amended or new claims which broaden or enlarge the scope of a claim of the patent should be rejected under 35 U.S.C. 305. The test for when an amended or "new claim enlarges the scope of an original claim under 35 U.S.C. 305 is the same as that under the 2-year limitation for reissue applications adding enlarging claims under 35 U.S.C. 251, last paragraph." *In re Freeman,* 30 F.3d 1459, 1464, 31 USPQ2d 1444, 1447 (Fed. Cir. 1994). See MPEP § 2258 for a discussion of enlargement of claim scope. For handling of new matter, see MPEP § 2270. Additional claims may be added by amendment in a reexamination proceeding, without any fee. Amendments proposed in a reexamination will normally be entered and be considered to be entered for purposes of prosecution before the Office (if they are

timely and comply with the rules); however, the amendments do not become effective in the patent until the reexamination certificate under 35 U.S.C. 307 is issued.

No amendment will be permitted where the certificate issues after expiration of the patent. See 37 CFR 1.530 (d)(3). The patent expiration date for a utility patent, for example, is determined by taking into account the term of the patent, whether maintenance fees have been paid for the patent, and whether any disclaimer was filed as to the patent to shorten its term. Any other relevant information should also be taken into account.

Amendment Entry — Amendments which comply with 37 CFR 1.530(d)-(j) will be entered in the reexamination file wrapper. An amendment will be given a Paper Number and will be designated by consecutive letters of the alphabet (A, B, C, etc.). The amendment will be entered by drawing a line in red ink through the claim(s) or paragraph(s) canceled or amended, and the substituted copy being indicated by reference letter. See MPEP § 2234.

I. MANNER OF MAKING AMENDMENTS IN REEXAMINATION PROCEEDINGS

The provisions of 37 CFR 1.530(d)-(k) apply to amendments in reexamination proceedings.

A. The Specification

37 CFR 1.530(d)(1) relates to the manner of making amendments to the reexamination "specification" (other than the claims). It is not to be used for making amendments to the claims or the drawings.

37 CFR 1.530(d)(1) requires that all amendments, which include any deletions or additions, must be made by submission of the full text of any paragraph to be changed in any manner, with markings (brackets and underlining) showing the changes. It should be noted that examiner's amendments made at the time when the Notice of Intent to Issue Reexamination Certificate (NIRC) is prepared also require the full text of any paragraph to be changed, with markings. The exception for examiner's amendment set forth in 37 CFR 1.121(g) does not apply to examiner's amendments in reexamination proceedings. It should further be noted that the requirement of 37 CFR 1.530(d)(1) applies regardless of whether the amendment is submitted on paper or on compact disc (pursuant to 37 CFR 1.96 or 1.825). The only exception to this requirement is that an entire paragraph of specification text may be deleted from the specification by a statement deleting the paragraph without the presentation of the text of the paragraph.

In accordance with 37 CFR 1.530(d)(1), all paragraphs which are added to the specification must be submitted as completely underlined.

37 CFR 1.530(d)(1) requires that the precise point where each amendment is to be made must be indicated.

37 CFR 1.530(d)(1) defines the "markings" by reference to 37 CFR 1.530(f) as being brackets for deletion and underlining for addition. All bracketing and underlining is made in comparison to the original patent; <u>not</u> in comparison with the prior amendment.

Where a change is made in one sentence, paragraph or page of the patent, and the change increases or decreases the size of the sentence, paragraph or page, this will have no effect on the body of the reexamination "specification" (the copy of the patent). This is because all insertions are made as blocked additions of paragraphs, which are not physically inserted within the specification papers. Rather, each blocked paragraph is assigned a letter and number, and a caret written in the specification papers indicates where the blocked paragraph is to be incorporated. Therefore, a reexamination patent owner need not be concerned with page formatting considerations when presenting amendments to the Office.

B. The Claims

37 CFR 1.530(d)(2) relates to the manner of making amendments to the claims in a reexamination proceeding. It is not to be used for making amendments to the remainder of the specification or to the drawings.

37 CFR 1.530(d)(2) requires that:

(A) for each claim that is proposed to be amended by the amendment paper being submitted (the current amendment paper), the entire text of the claim must be presented with appropriate markings showing the changes to the claim;

(B) for each proposed new claim which is added in the reexamination by the amendment paper being submitted (the current amendment paper), the entire text of the proposed new claim must be presented and it must be underlined throughout;

(C) a patent claim is canceled by a direction to cancel that claim, there is no need to present the text of the patent claim surrounded by brackets; and

(D) a proposed new claim (previously added in the reexamination) is canceled by a direction to cancel that claim.

It should be noted that examiner's amendments made at the time when the Notice of Intent to Issue Reexamination Certificate (NIRC) is prepared also require the full text of any claim to be changed, with markings. The exception for examiner's amendment set forth in 37 CFR 1.121(g) does not apply to examiner's amendments in reexamination proceedings. It should further be noted that the requirements of 37 CFR 1.530(d)(2) apply regardless of whether the amendment is submitted on paper or on compact disc (pursuant to 37 CFR 1.96 or 1.825).

In accordance with 37 CFR 1.530(e), each amendment submitted must set forth the status of all patent claims and all added claims as of the date of the submission. The status to be set forth is whether the claim is pending, or canceled. The failure to submit the claim status will generally result in a notification to the patent owner of an informal response (see MPEP § 2266.02) prior to final rejection. Such an amendment submitted after final rejection will not be entered.

Also in accordance with 37 CFR 1.530(e), each claim amendment must be accompanied by an explanation of the support in the disclosure of the patent for the amendment (i.e., support for the changes made in the claim(s), support for any insertions and deletions). The failure to submit an explanation will generally result in a notification to the patent owner that the amendment prior to final rejection is not completely responsive since the failure to set forth the support in the disclosure goes to the merits of the case (see MPEP § 2266.01). Such an amendment submitted after final rejection will not be entered.

37 CFR 1.530(f) identifies the type of markings required in the claim to be amended as underlining for added material and single brackets for material deleted.

37 CFR 1.530(g) states that original patent claims may not be renumbered. A patent claim retains its number even if it is canceled in the reexamination proceeding, and the numbering of any added claims must begin after the last original patent claim.

C. The Drawings

With respect to amendment of the drawings in a reexamination proceeding, see MPEP § 2250.01.

Form paragraph 22.12 may be used to advise patent owner of the proper manner of making amendments in a reexamination proceeding.

D. Form Paragraphs

¶ 22.12 Amendments Proposed in a Reexamination - 37 CFR 1.530(d)-(j)

Patent owner is notified that any proposed amendment to the specification and/or claims in this reexamination proceeding must comply with 37 CFR 1.530(d)-(j).

Examiner Note:

This paragraph may be used in the order granting reexamination and/or in the first Office action to advise patent owner of the proper manner of making amendments in a reexamination proceeding.

Form paragraph 22.13 may be used to notify the patent owner in a reexamination proceeding that a proposed amendment in the proceeding filed prior to final rejection does not comply with 37 CFR 1.530(d)-(j).

¶ 22.13 Improper Amendment in a Reexamination - 37 CFR 1.530(d)-(j)

The amendment filed **[1]** proposes amendments to **[2]** that do not comply with 37 CFR 1.530(d)-(j), which sets forth the manner of making amendments in reexamination proceedings. A supplemental paper correctly proposing amendments in the reexamination proceeding is required.

A shortened statutory period for response to this letter is set to expire ONE MONTH or THIRTY DAYS, whichever is longer, from the mailing date of this letter. If patent owner fails to timely correct this informality, the amendment will be held not to be an appropriate response, the present reexamination proceeding will be terminated, and a reexamination certificate will issue. 37 CFR 1.550(d).

Examiner Note:

This paragraph may be used for any 37 CFR 1.530(d)-(j) informality as to a proposed amendment submitted in a reexamination proceeding prior to final rejection. After final rejection, the amendment should not be entered and patent owner informed of such in an advisory Office action using Form PTOL 467.

The cover sheet to be used for mailing the notification to the patent owner will be PTOL-473.

As an alternative to using form paragraph 22.13, it would also be appropriate to use form PTOL-475.

Note that if the informal amendment is submitted after final rejection, form paragraph 22.13 and form

PTOL-475 should not be used. Rather an advisory Office action (using form PTOL-467) should be issued indicating that the amendment was not entered. In the "Other" section, it should be explained that the amendment was not entered because it does not comply with 37 CFR 1.530(d)-(j), which sets forth the manner of making amendments in reexamination proceedings.

II. ALL CHANGES ARE MADE *VIS-A-VIS* THE PATENT BEING REEXAMINED

When a reexamination certificate is printed, all underlined matter is printed in italics and all brackets are printed as they were inserted in the proceeding in order to thereby show exactly which additions and deletions have been made in the patent via the reexamination proceeding. In accordance with 37 CFR 1.530(i), all amendments to the patent being reexamined must be made relative to the patent specification in effect as of the date of the filing of the request for reexamination. The patent specification includes the claims and drawings. If there was a prior change to the patent (made via a prior reexamination certificate, reissue of the patent, certificate of correction, etc.), the first amendment must be made relative to the patent specification as changed by the prior proceeding or other mechanism for changing the patent. All amendments subsequent to the first amendment must also be made relative to the patent specification in effect as of the date of the filing of the request for reexamination, and <u>not</u> relative to the prior amendment.

III. EXAMPLES

A substantial number of problems arise in the Office because of improper submission of proposed amendments in reexamination proceedings. The following examples are provided to assist in the preparation of proper proposed amendments in reexamination proceedings.

(A) Original Patent Description Or Patent Claim Amended

(1) Specification - submit a copy of the entire paragraph (of the specification of the patent) being amended with underlining and bracketing. Thus, the amendment would be presented as follows:

> Replace the paragraph beginning at column 4, line 23 with the following:
>
> Scanning [is] <u>are</u> controlled by clocks which are, in turn, controlled from the display tube line synchronization. The signals resulting from scanning the scope of the character are delivered in parallel, then converted into serial mode through a shift register, wherein the shift signal frequency is controlled by a clock that is controlled from the display tube line synchronization.

(2) Claims - for changes to the patent claims, one must submit a copy of the entire patent claim with the amendments shown by underlining and bracketing. Thus, the amendment would be presented as follows:

> Amend claim 6 as follows:
>
> Claim 6. The apparatus of claim [5] <u>1</u> wherein the [first] <u>second</u> piezoelectric element is parallel to the [second] <u>third</u> piezoelectric element.

If the dependency of any original patent claim is to be changed by amendment, it is proper to make that original patent claim dependent upon a later filed higher numbered claim.

(B) Cancellation of Entire Claim(s)

(1) Original patent claim canceled - in writing, direct cancellation of the entire patent claim.

> Cancel claim 6.

(2) Proposed new claim (previously added in the reexamination) canceled - in writing, direct cancellation of the entire claim.

> Cancel claim 15.

(C) Presentation Of New Claims

Each proposed new claim (i.e., a claim not found in the patent, that is newly presented in the reexamination proceeding) should be presented with underlining throughout the claim.

> <u>Claim 7. The apparatus of claim 5 further comprising electrodes attaching to said opposite faces of the second and third piezoelectric elements.</u>

Even though an original claim may have been canceled, the numbering of the original claims does not change. Accordingly, any added claims are numbered beginning with the next higher number than the number of claims in the original patent. If new claims have been added to the reexamination proceeding

which are later canceled prior to the issuance of the reexamination certificate, the examiner will renumber, at the time of preparing the NIRC for subsequent issuance of the certificate, any remaining new claims in numerical order to follow the highest number of the claims in the original patent.

A claim number previously assigned to a new claim that has been canceled should not be reassigned to a different new claim during the reexamination proceeding. For example, if new claim 5 added in a prior amendment is canceled in a later amendment, a different new claim added in a later amendment during the reexamination proceeding would be claim 6. Of course, at the time of preparing the NIRC, claim 6 would be renumbered for issue of the reexamination certificate as claim 5.

(D) Amendment Of New Claims

An amendment of a new claim (i.e., a claim not found in the patent, that was previously presented in the reexamination proceeding) must present the entire text of the new claim containing the amendatory material, and it must be underlined throughout the claim. The presentation cannot contain any bracketing or other indication of what was in the previous version of the claim. This is because all changes in the reexamination are made *vis-a-vis* the original patent, and not in comparison with any prior amendment. Although the presentation of the amended claim does not contain any indication of what is changed from a previous version of the claim, patent owner must point out what is changed, in the "Remarks" portion of the amendment. Also, as per 37 CFR 1.530(e), each change made in the claim must be accompanied by an explanation of the support in the disclosure of the patent (i.e., the reexamination specification) for the change.

(E) Amendment Of Original Patent Claims More Than Once

The following illustrates proper claim amendment of original patent claims in reexamination proceedings:

(1) Patent claim.

Claim 1. A cutting means having a handle portion and a blade portion.

(2) Proper first amendment format.

Claim 1. A [cutting means] knife having a bone handle portion and a notched blade portion.

(3) Proper second amendment format.

Claim 1. A [cutting means] knife having a handle portion and a serrated blade portion.

Note that the second amendment must include (1) the changes previously presented in the first amendment; i.e., [cutting means] knife, as well as (2) the new changes presented in the second amendment; i.e., serrated.

The word bone was presented in the first amendment and is now to be deleted in the second amendment. Thus, "bone" is NOT to be shown in brackets in the second amendment. Rather, the word "bone" is simply omitted from the claim, since "bone" never appeared in the patent.

The word notched which was presented in the first amendment is replaced by the word serrated in the second amendment. The word notched is being deleted in the second amendment and did not appear in the patent; accordingly, "notched" is not shown in any form in the claim. The word serrated is being added in the second amendment, and accordingly, "serrated" is added to the claim and is underlined.

It should be understood that in the second amendment, the deletions of "notched" and "bone" are not changes from the original patent claim text and therefore, are not shown in the second amendment. In both the first and the second amendments, the entire claim is presented only with the changes from the original patent text.

If the patent expires during the *ex parte* reexamination procedure and the patent claims have been amended in that *ex parte* reexamination proceeding, the Office will hold the amendments as being improper and all subsequent reexamination will be on the basis of the unamended patent claims. This procedure is necessary since no amendments will be incorporated into the patent by certificate after the expiration of the patent.

For clerical handling of amendments, see MPEP § 2270.

As to amendments in a merged proceeding, see MPEP § 2283 and § 2285.

For handling a dependent claim in reexamination proceedings, see MPEP § 2260.01.

2250.01 Correction of Patent Drawings

37 CFR 1.530. Statement by patent owner in ex parte reexamination; amendment by patent owner in ex parte or inter partes reexamination; inventorship change in ex parte or inter partes reexamination.

*****

(d) *Making amendments in a reexamination proceeding.* A proposed amendment in an *ex parte* or an *inter partes* reexamination proceeding is made by filing a paper directing that proposed specified changes be made to the patent specification, including the claims, or to the drawings. An amendment paper directing that proposed specified changes be made in a reexamination proceeding may be submitted as an accompaniment to a request filed by the patent owner in accordance with § 1.510(e), as part of a patent owner statement in accordance with paragraph (b) of this section, or, where permitted, during the prosecution of the reexamination proceeding pursuant to § 1.550(a) or § 1.937.

*****

(3) *Drawings.* Any change to the patent drawings must be submitted as a sketch on a separate paper showing the proposed changes in red for approval by the examiner. Upon approval of the changes by the examiner, only new sheets of drawings including the changes and in compliance with § 1.84 must be filed. Amended figures must be identified as "Amended," and any added figure must be identified as "New." In the event a figure is canceled, the figure must be surrounded by brackets and identified as "Canceled."

*****

In the reexamination proceeding, the copy of the patent drawings submitted pursuant to 37 CFR 1.510(b)(4) will be used for reexamination purposes, provided no change whatsoever is made to the drawings. If there is to be ANY change in the drawings, a new sheet of drawings for each sheet changed must be submitted. The change may NOT be made on the original patent drawings.

37 CFR 1.530(d)(3) sets forth the manner of making amendments to the drawings. Amendments to the original patent drawing sheets are not permitted, and any change to the patent drawings must be in the form of a new sheet of drawings for each drawing sheet that is changed. Any amended figure(s) must be identified as "Amended" and any added figure(s) must be identified as "New." In the event a figure is canceled, the figure must be surrounded by brackets and identified as "Canceled."

Where the patent owner wishes to change/amend the drawings, the patent owner should submit a sketch in permanent ink showing proposed change(s)/amendment(s) in red, for approval by the examiner. The submitted sketch should be presented as a separate paper, and it will be made part of the record. Once the sketch is approved, sheets of substitute formal drawings must be submitted for each drawing sheet that is to be changed/amended. After receiving the new sheets of drawings from the patent owner, the examiner may have the draftsperson review the new sheets of drawings if the examiner would like the draftsperson's assistance in identifying errors in the drawings. If a draftsperson reviews the drawings, and finds the drawings to be unacceptable, the draftsperson should complete a PTO-948 for the examiner to include with the next Office action. A draftsperson's "stamp" to indicate approval is no longer required on patent drawings, and these stamps are no longer to be used by draftspersons. The new sheets of drawings should be entered in the reexamination file.

2250.02 Correction of Inventorship

37 CFR 1.530. Statement by patent owner in ex parte reexamination; amendment by patent owner in ex parte or inter partes reexamination; inventorship change in ex parte or inter partes reexamination.

*****

(l) *Correction of inventorship in an ex parte or inter partes reexamination proceeding.*

(1) When it appears in a patent being reexamined that the correct inventor or inventors were not named through error without deceptive intention on the part of the actual inventor or inventors, the Commissioner may, on petition of all the parties set forth in § 1.324(b)(1)-(3), including the assignees, and satisfactory proof of the facts and payment of the fee set forth in § 1.20(b), or on order of a court before which such matter is called in question, include in the reexamination certificate to be issued under § 1.570 or § 1.977 an amendment naming only the actual inventor or inventors. The petition must be submitted as part of the reexamination proceeding and must satisfy the requirements of § 1.324.

(2) Notwithstanding the preceding paragraph (1)(1) of this section, if a petition to correct inventorship satisfying the requirements of § 1.324 is filed in a reexamination proceeding, and the reexamination proceeding is terminated other than by a reexamination certificate under § 1.570 or § 1.977, a certificate of correction indicating the change of inventorship stated in the petition will be issued upon request by the patentee.

Where the inventorship of a patent being reexamined is to be corrected, a petition for correction of inventorship which complies with 37 CFR 1.324 must be submitted during the prosecution of the reexamination proceeding. See 37 CFR 1.530(l)(1). If the

petition under 37 CFR 1.324 is granted, a certificate of correction indicating the change of inventorship will **not** be issued, because the reexamination certificate that will ultimately issue will contain the appropriate change of inventorship information. The certificate of correction is in effect merged with the reexamination certificate.

In some instances, the reexamination proceeding terminates but does not result in a reexamination certificate under 37 CFR 1.570, e.g., reexamination is vacated, or the order for reexamination is denied. In those instances, patent owner may, after the termination of the reexamination proceeding, request that the inventorship be corrected by a certificate of correction indicating the change of inventorship. See 37 CFR 1.530(l)(2). Alternatively, the failure to name the correct inventive entity is an error in the patent which is correctable by reissue under 35 U.S.C. 251. See MPEP § 1412.04 for a discussion of when correction of inventorship by reissue is appropriate.

2251 Reply by Third Party Requester

37 CFR 1.535. Reply by third party requester in ex parte reexamination.

A reply to the patent owner's statement under § 1.530 may be filed by the *ex parte* reexamination requester within two months from the date of service of the patent owner's statement. Any reply by the *ex parte* requester must be served upon the patent owner in accordance with § 1.248. If the patent owner does not file a statement under § 1.530, no reply or other submission from the *ex parte* reexamination requester will be considered.

If the patent owner files a statement in a timely manner, the third party requester is given a period of 2 months from the date of service to reply. Since the statute, 35 U.S.C. 304, provides this time period, there will be no extensions of time granted.

The reply need not be limited to the issues raised in the statement. The reply may include additional prior art patents and printed publications and may raise any issue appropriate for reexamination.

If no statement is filed by the patent owner, no reply is permitted from the third party requester.

The third party requester must serve a copy of the reply on the patent owner. See MPEP § 2266.03 for further discussion as to the third party requester providing service on the patent owner.

The third party requester is not permitted to file any further papers after his or her reply to the patent owner's statement. Any further papers will not be considered and will be returned to the requester. The patent owner cannot file papers on behalf of the third party requester and thereby circumvent the rules.

2252 Consideration of Statement and Reply

37 CFR 1.540. Consideration of responses in ex parte reexamination.

The failure to timely file or serve the documents set forth in § 1.530 or in § 1.535 may result in their being refused consideration. No submissions other than the statement pursuant to § 1.530 and the reply by the *ex parte* reexamination requester pursuant to § 1.535 will be considered prior to examination.

Although 37 CFR 1.540 would appear to be discretionary in stating that late responses "may result in their being refused consideration," patent owners and requesters can expect consideration to be refused if the statement and/or reply is not timely filed. 37 CFR 1.540 restricts the number and kind of submissions to be considered prior to examination to those expressly provided for in 37 CFR 1.530 and 37 CFR 1.535. Untimely submissions will ordinarily not be considered. Untimely submissions, other than untimely papers filed by the patent owner after the period set for response, will not be placed of record in the reexamination file but will be returned to the sender.

Papers filed in which no proof of service is included and proof of service is required may be denied consideration. Where no proof of service is included, inquiry should be made of the sender by the reexamination clerk as to whether service was in fact made. If no service was made, the paper is placed in the reexamination file but is not considered. See MPEP § 2266.03 and § 2267.

2253 Consideration by Examiner

Once reexamination is ordered, any submissions properly filed and served in accordance with 37 CFR 1.530 and 37 CFR 1.535 will be considered by the examiner when preparing the first Office action.

With respect to consideration of any proposed amendments to the specification, including claims, made by the patent owner, the examiner will be guided by the provisions of 37 CFR 1.530(d)-(j). With respect to consideration of the patent owner's statement, the examiner will be guided by 37 CFR 1.530(c).

As to consideration of a reply by a third party requester, the examiner will be guided by 37 CFR 1.535. If the requester's reply to the patent owner's statement raises issues not previously presented, such issues will be treated by the examiner in the Office action if they are within the scope of reexamination. However, if an issue presented by the reply is not within the scope of reexamination, it should be treated pursuant to 37 CFR 1.552(c).

For handling of new matter, see MPEP § 2270.

2254 Conduct of Reexamination Proceedings

35 U.S.C. 305. Conduct of reexamination proceedings.

After the times for filing the statement and reply provided for by section 304 of this title have expired, reexamination will be conducted according to the procedures established for initial examination under the provisions of sections 132 and 133 of this title. In any reexamination proceeding under this chapter, the patent owner will be permitted to propose any amendment to his patent and a new claim or claims thereto, in order to distinguish the invention as claimed from the prior art cited under the provisions of section 301 of this title, or in response to a decision adverse to the patentability of a claim of a patent. No proposed amended or new claim enlarging the scope of a claim of the patent will be permitted in a reexamination proceeding under this chapter. All reexamination proceedings under this section, including any appeal to the Board of Patent Appeals and Interferences, will be conducted with special dispatch within the Office.

37 CFR 1.550. Conduct of ex parte reexamination proceedings.

(a) All *ex parte* reexamination proceedings, including any appeals to the Board of Patent Appeals and Interferences, will be conducted with special dispatch within the Office. After issuance of the *ex parte* reexamination order and expiration of the time for submitting any responses, the examination will be conducted in accordance with §§ 1.104 through 1.116 and will result in the issuance of an *ex parte* reexamination certificate under § 1.570.

(b) The patent owner in an *ex parte* reexamination proceeding will be given at least thirty days to respond to any Office action. In response to any rejection, such response may include further statements and/or proposed amendments or new claims to place the patent in a condition where all claims, if amended as proposed, would be patentable.

(c) The time for taking any action by a patent owner in an *ex parte* reexamination proceeding will be extended only for sufficient cause and for a reasonable time specified. Any request for such extension must be filed on or before the day on which action by the patent owner is due, but in no case will the mere filing of a request effect any extension. See § 1.304(a) for extensions of time for filing a notice of appeal to the U.S. Court of Appeals for the Federal Circuit or for commencing a civil action.

(d) If the patent owner fails to file a timely and appropriate response to any Office action or any written statement of an interview required under § 1.560(b), the *ex parte* reexamination proceeding will be terminated, and the Commissioner will proceed to issue a certificate under § 1.570 in accordance with the last action of the Office.

(e) If a response by the patent owner is not timely filed in the Office,

(1) The delay in filing such response may be excused if it is shown to the satisfaction of the Commissioner that the delay was unavoidable; a petition to accept an unavoidably delayed response must be filed in compliance with § 1.137(a); or

(2) The response may nevertheless be accepted if the delay was unintentional; a petition to accept an unintentionally delayed response must be filed in compliance with § 1.137(b).

(f) The reexamination requester will be sent copies of Office actions issued during the *ex parte* reexamination proceeding. After filing of a request for *ex parte* reexamination by a third party requester, any document filed by either the patent owner or the third party requester must be served on the other party in the reexamination proceeding in the manner provided by § 1.248. The document must reflect service or the document may be refused consideration by the Office.

(g) The active participation of the *ex parte* reexamination requester ends with the reply pursuant to § 1.535, and no further submissions on behalf of the reexamination requester will be acknowledged or considered. Further, no submissions on behalf of any third parties will be acknowledged or considered unless such submissions are:

(1) in accordance with § 1.510 or § 1.535; or

(2) entered in the patent file prior to the date of the order for *ex parte* reexamination pursuant to § 1.525.

(h) Submissions by third parties, filed after the date of the order for *ex parte* reexamination pursuant to § 1.525, must meet the requirements of and will be treated in accordance with § 1.501(a).

Once reexamination is ordered and the times for submitting any responses to the order have expired, no further active participation by a third party reexamination requester is allowed, and no third party submissions will be acknowledged or considered unless they are in accordance with 37 CFR 1.510. The reexamination proceedings will be *ex parte*, even if ordered based on a request filed by a third party, because this was the intention of the legislation. *Ex parte* proceedings preclude the introduction of multiple arguments and issues by the third party requester which are not within the intent of 35 U.S.C. 305 ("reexamination will be conducted according to the procedures established for initial examination under the provisions of sections 132 and 133 of this title"), and *ex parte* proceedings reduce possible harassment of the patent owner.

The patent owner may not file papers on behalf of the requester and thereby circumvent the intent of the legislation and the rules. The Court of Appeals for the Federal Circuit held in *Emerson Elec. Co. v. Davoil, Inc.*, 88 F.3d 1051, 39 USPQ2d 1474 (Fed. Cir. 1996) that a federal district court does not have the authority to order a patent owner to file papers prepared by a third party in addition to the patent owner's own submission in a patent reexamination proceeding. Such papers prepared by the third party and filed by the patent owner will not be entered, and the entire submission will be returned to the patent owner as an inappropriate response. See MPEP § 2266 and § 2267.

The examination will be conducted in accordance with 37 CFR 1.104, 1.105, 1.110-1.113, and 1.116 (35 U.S.C. 132 and 133) and will result in the issuance of a reexamination certificate under 37 CFR 1.570. The proceeding shall be conducted with special dispatch within the Office pursuant to 35 U.S.C. 305, last sentence. A full search will not routinely be made by the examiner. The third party reexamination requester will be sent copies of Office actions and the patent owner must serve responses on the requester. Citations submitted in the patent file prior to issuance of an order for reexamination will be considered by the examiner during the reexamination. Reexamination will proceed even if the copy of the order sent to the patent owner is returned undelivered. The notice under 37 CFR 1.11(c) is constructive notice to the patent owner and lack of response from the patent owner will not delay reexamination. See MPEP § 2230.

2255 Who Reexamines

The examination will ordinarily be conducted by the same patent examiner in the Technology Center who made the decision on whether the reexamination request should be granted. See MPEP § 2236.

However, if a petition under 37 CFR 1.515(c) is granted, the reexamination will normally be conducted by another examiner. See MPEP § 2248.

2256 Prior Patents and Printed Publications Considered by Examiner in Reexamination

The primary source of prior art will be the patents and printed publications cited in the request.

The examiner must also consider patents and printed publications:

(A) cited by a reexamination requester under 37 CFR 1.510;

(B) cited in patent owner's statement under 37 CFR 1.530 or a requester's reply under 37 CFR 1.535 if they comply with 37 CFR 1.98;

(C) cited by patent owner under a duty of disclosure (37 CFR 1.555) in compliance with 37 CFR 1.98;

(D) discovered by the examiner in searching;

(E) of record in the patent file from earlier examination; and

(F) of record in the patent file from any 37 CFR 1.501 submission prior to date of an order if it complies with 37 CFR 1.98.

The reexamination file must clearly indicate which prior art patents and printed publications the examiner has considered during the *ex parte* examination of the reexamination proceeding.

2257 Listing of Prior Art

The examiner must list on a form PTO-892, if not already listed on a form PTO-1449 or on a form PTO/SB/42 (37 CFR 1.501 IDS in a Patent), all prior patents or printed publications which have been properly:

(A) cited by the reexamination requester in the request under 37 CFR 1.510,

(B) cited by the patent owner in the statement under 37 CFR 1.530 if the citation complies with 37 CFR 1.98,

(C) cited by the reexamination requester in the reply under 37 CFR 1.535 if the citation complies with 37 CFR 1.98, and

(D) cited by the patent owner under the duty of disclosure requirements of 37 CFR 1.555 if the citation complies with 37 CFR 1.98.

The examiner must also list on a form PTO-892, if not already listed on a form PTO-1449 or on form PTO/SB/42, all prior patents or printed publications

which have been cited in the decision on the request, or applied in making rejections or cited as being pertinent during the reexamination proceedings. Such prior patents or printed publications may have come to the examiner's attention because:

(A) they were of record in the patent file due to a prior art submission under 37 CFR 1.501 which was received prior to the date of the order,

(B) they were of record in the patent file as result of earlier examination proceedings, or

(C) they were discovered by the examiner during a prior art search.

In instances where the examiner considers but does not wish to cite documents of record in the patent file, notations should be made in the reexamination file in the manner set forth in MPEP § 719.05, item II.

All citations listed on form PTO-892 and all citations not lined out on any form PTO-1449 and on any form PTO/SB/42 will be printed on the reexamination certificate under "References cited."

2258 Scope of Reexamination

37 CFR 1.552. Scope of reexamination in ex parte reexamination proceedings.

(a) Claims in an *ex parte* reexamination proceeding will be examined on the basis of patents or printed publications and, with respect to subject matter added or deleted in the reexamination proceeding, on the basis of the requirements of 35 U.S.C. 112.

(b) Claims in an *ex parte* reexamination proceeding will not be permitted to enlarge the scope of the claims of the patent.

(c) Issues other than those indicated in paragraphs (a) and (b) of this section will not be resolved in a reexamination proceeding. If such issues are raised by the patent owner or third party requester during a reexamination proceeding, the existence of such issues will be noted by the examiner in the next Office action, in which case the patent owner may consider the advisability of filing a reissue application to have such issues considered and resolved.

The reexamination proceeding provides a complete reexamination of the patent claims on the basis of prior art patents and printed publications. Issues relating to 35 U.S.C. 112 are addressed only with respect to new claims or amendatory subject matter in the specification, claims or drawings. Any new or amended claims are examined to ensure that the scope of the original patent claims is not enlarged, i.e., broadened. See 35 U.S.C. 305.

I. PRIOR PATENTS OR PRINTED PUBLICATIONS

Rejections on prior art in reexamination proceedings may only be made on the basis of prior patents or printed publications. Prior art rejections may be based upon the following portions of 35 U.S.C. 102:

"(a) . . . patented or described in a printed publication in this or a foreign country, before the invention thereof by the applicant for patent, or"

"(b) the invention was patented or described in a printed publication in this or a foreign country . . . more than one year prior to the date of the application for patent in the United States, or"

*****

"(d) the invention was first patented or caused to be patented, or was the subject of an inventor's certificate, by the applicant or his legal representatives or assigns in a foreign country prior to the date of the application for patent in this country on an application for patent or inventor's certificate filed more than twelve months before the filing of the application in the United States, or"

"(e) the invention was described in—

(1) an application for patent, published under section 122(b), by another filed in the United States before the invention by the applicant for patent, except that an international application filed under the treaty defined in section 351(a) shall have the effect under this subsection of a national application published under section 122(b) only if the international application designating the United States was published under Article 21(2)(a) of such treaty in the English language; or

(2) a patent granted on an application for patent by another filed in the United States before the invention by the applicant for patent, except that a patent shall not be deemed filed in the United States for the purposes of this subsection based on the filing of an international application filed under the treaty defined in section 351(a); or"

"(f) he did not himself invent the subject matter sought to be patented, or"

"(g)(1) during the course of an interference conducted under section 135 or section 291, another inventor involved therein establishes, to the extent permitted in section 104, that before such person's invention thereof the invention was made by such other inventor and not abandoned, suppressed, or concealed, or (2) before such person's invention thereof, the invention was made in this country by another inventor who had not abandoned, suppressed, or concealed it. In determining priority of invention under this subsection, there shall be considered not only the respective dates of conception and reduction to practice of the invention, but also the reasonable diligence of one who was first to conceive and last to reduce to practice, from a time prior to conception by the other."

Rejections made under 35 U.S.C. 102(f) or (g) based on the prior invention of another must be disclosed in a patent or printed publication. Similarly, substantial new grounds of patentability may also be made under 35 U.S.C. 103 which are based on the above indicated portions of 35 U.S.C. 102.

A substantial new question of patentability may be found under 35 U.S.C. 102(f) or (g)/103 based on the prior invention of another disclosed in a patent or printed publication, if there was no common ownership at the time the claimed invention was made. See MPEP § 706.02(l). See MPEP § 706.02(l)(1) for information pertaining to references which qualify as prior art under 35 U.S.C. 102(e)/103.

A. Previously Considered Prior Art Patents or Printed Publications

After reexamination is ordered based on a proper substantial new question of patentability, a ground of rejection based **wholly** on prior art previously considered by the Office (in an earlier examination of the patent) may not be raised by the examiner. *In re Recreative Technologies*, 83 F.3d 1394, 38 USPQ2d 1776 (Fed. Cir. 1996). In deciding whether to make a rejection of the claims, the consideration to be given to prior art patents or printed publications cited in an earlier examination is controlled by *In re Portola Packaging Inc.*, 110 F.3d 786, 42 USPQ2d 1295 (Fed. Cir. 1997).

See the guidelines for compliance with the *Portola Packaging* decision in MPEP § 2242. Note also *In re Hiniker Co.*, 150 F.3d 1362, 1367, 47 USPQ2d 1523,1527 (Fed. Cir. 1998)(court held the reexamination proceeding was supported by a substantial new question of patentability where the rejection before the court was based on a combination of art that had been before the examiner during the original prosecution, and art newly cited during the reexamination proceeding.) The court further stated that any error in the Commissioner's authority to institute a reexamination was "washed clean" during the reexamination procedure.

B. Matters Other Than Patents or Printed Publications

Rejections will not be based on matters other than patents or printed publications, such as public use or sale, inventorship, 35 U.S.C. 101, fraud, etc. In this regard, see *In re Lanham*, 1 USPQ2d 1877 (Comm'r Pat. 1986), and *Stewart Systems v. Comm'r of Patents and Trademarks*, 1 USPQ2d 1879 (E.D. Va. 1986). A rejection on prior public use or sale, insufficiency of disclosure, etc., cannot be made even if it relies on a prior patent or printed publication. Prior patents or printed publications must be applied under an appropriate portion of 35 U.S.C. 102 and/or 103 when making a rejection.

C. Intervening Patents or Printed Publications

Rejections may be made in reexamination proceedings based on intervening patents or printed publications where the patent claims under reexamination are entitled only to the filing date of the patent and are not supported by an earlier foreign or United States patent application whose filing date is claimed. For example, under 35 U.S.C. 120, the effective date of these claims would be the filing date of the application which resulted in the patent. Intervening patents or printed publications are available as prior art under *In re Ruscetta*, 255 F.2d 687, 118 USPQ 101 (CCPA 1958), and *In re van Langehoven,* 458 F.2d 132, 173 USPQ 426 (CCPA 1972). See also MPEP § 201.11.

D. Double Patenting

Double patenting is normally proper for consideration in reexamination. See *In re Lonardo*, 119 F.3d 960, 43 USPQ2d 1262 (Fed. Cir. 1997). In *Lonardo*, the Federal Circuit reviewed and interpreted the language of 35 U.S.C. 303 and stated that:

> Since the statute in other places refers to prior art in relation to reexamination, *see id.*, it seems apparent that Congress intended that the phrases 'patents and publications' and 'other patents or printed publications' in section 303(a) not be limited to prior art patents or printed publications... . Finally, it is reasonable to conclude that Congress intended to include double patenting over a prior patent as a basis for reexamination because maintenance of a patent that creates double patenting is as much of an imposition on the public as maintenance of patent that is unpatentable over prior art. Thus, we conclude that the PTO was authorized during reexamination to consider the question of double patenting based upon the `762 patent.

In re Lonardo, 119 F.3d at 966, 43 USPQ2d at 1266. Accordingly, the issue of double patenting is appropriate for consideration in reexamination, both as a basis for ordering reexamination and during subsequent examination on the merits. The issue of double

patenting is to be considered by the examiner when making the decision on the request for reexamination. The examiner should determine whether the issue of double patenting raises a substantial new question of patentability. The issue of double patenting is also to be considered during the examination stage of reexamination proceeding. In the examination stage, the examiner should determine whether a rejection based on double patenting is appropriate.

See also *Ex parte Obiaya*, 227 USPQ 58, 60 (Bd. Pat. App. & Inter. 1985) ("Double patenting rejections are analogous to rejections under 35 U.S.C. 103 and depend on the presence of a prior patent as the basis for the rejection").

As is the case for an application, a judicially created double patenting rejection (made in a reexamination) can be overcome by the filing of a terminal disclaimer in accordance with 37 CFR 1.321(c). Where a terminal disclaimer is submitted in a reexamination proceeding, form paragraph 14.23.01 should be used if the terminal disclaimer is proper. If the terminal disclaimer is not proper, form paragraph 14.25 should be used, and one or more of the appropriate form paragraphs 14.26 to 14.32 must follow form paragraph 14.25 to indicate why the terminal disclaimer is not accepted. See also MPEP § 1490.

E. Affidavits or Declarations

Affidavits or declarations which explain the contents or pertinent dates of prior patents or printed publications in more detail may be considered in reexamination, but any rejection must be based upon the prior patents or printed publications as explained by the affidavits or declarations. The rejection in such circumstances cannot be based on the affidavits or declarations as such, but must be based on the prior patents or printed publications.

F. Admissions; Use of Admissions

1. Initial Reexamination Determination and Order

The consideration under 35 U.S.C. 303 of a request for reexamination is limited to prior art patents and printed publications. See *Ex parte McGaughey*, 6 USPQ2d 1334, 1337 (Bd. Pat. App. & Inter. 1988). Thus an admission, *per se*, may not be the basis for establishing a substantial new question of patentability. However, an admission by the patent owner of record in the file or in a court record may be utilized in combination with a patent or printed publication.

2. Reexamination Ordered, Examination on the Merits

After reexamination has been ordered, the examination on the merits is dictated by 35 U.S.C. 305, see *Ex parte McGaughey*, 6 USPQ2d 1334, 1337 (Bd. Pat. App. & Inter. 1988).

Admissions by the patent owner in the record as to matters affecting patentability may be utilized in a reexamination proceeding; see 37 CFR 1.104(c)(3).

37 CFR 1.104(c)(3) provides that admissions by the patent owners as to matters affecting patentability may be utilized in a reexamination proceeding. The Supreme Court when discussing 35 U.S.C. 103 in *Graham v. John Deere Co.*, 383 U.S. 6, 148 USPQ 459 (1966) stated, *inter alia*, "the scope and content of the prior art are to be determined." Accordingly, a proper evaluation of the scope and content of the prior art in determining obviousness would require a utilization of any "admission" by the patent owner which can be used to interpret or modify a patent or printed publication applied in a reexamination proceeding. This is true whether such admission results from a patent or printed publication or from some other source. An admission as to what is in the prior art is simply that, an admission, and requires no independent proof. It is an acknowledged, declared, conceded, or recognized fact or truth, *Ex parte McGaughey*, 6 USPQ2d 1334, 1337 (Bd. Pat. App. & Inter. 1988). While the scope and content of the admission may sometimes have to be determined, this can be done from the record and from the paper file in the same manner as with patents and printed publications. To ignore an admission by the patent owner, from any source, and not use the admission as part of the prior art *in conjunction with patents and printed publications* in reexamination would make it impossible for the examiner to properly determine the scope and content of the prior art as required by *Graham*, supra.

The Board of Appeals upheld the use of an admission in a reexamination proceeding in *Ex parte Seiko Koko Kabushiki Kaisha*, 225 USPQ 1260 (Bd. Pat. App. & Inter. 1984), *Ex parte Kimbell*, 226 USPQ 688 (Bd. Pat. App. & Inter. 1985) and in *Ex parte McGaughey*, 6 USPQ2d 1334 (Bd. Pat. App. & Inter.

1988). In *Seiko*, the Board relied on *In re Nomiya*, 509 F.2d 566, 184 USPQ 607 (CCPA 1975) holding an admission of prior art in the specification of the parent undergoing reexamination is considered prior art which may be considered as evidence of obviousness under 35 U.S.C. 103. In *Kimbell*, the Board referred to the patent specification and noted the admission by appellant that an explosion-proof housing was well known at the time of the invention. In *Ex parte McGaughey*, 6 USPQ2d 1334, 1337 (Bd. Pat. App. & Int. 1988), the Board held that any equivocal admission relating to prior art is a fact which is part of the scope and content of the prior art and that prior art admissions established in the record are to be considered in reexamination. An admission from any source can be used with respect to interpreting or modifying a prior art patent or printed publication, in a reexamination proceeding. The Board expressly overruled the prior Board decision in *Ex parte Horton,* 226 USPQ 697 (Bd. Pat. App. & Inter. 1985) which held that admissions which are used as a basis for a rejection in reexamination must relate to patents and printed publications.

The admission can reside in the patent file (made of record during the prosecution of the patent application) or may be presented during the pendency of the reexamination proceeding or in litigation. Admissions by the patent owner as to any matter affecting patentability may be utilized to determine the scope and content of the prior art in conjunction with patents and printed publications in a prior art rejection, whether such admissions result from patents or printed publications or from some other source. An admission relating to *any* prior art (e.g., on sale, public use) established in the record or in court may be used by the examiner in combination with patents or printed publications in a reexamination proceeding. Any admission submitted by the patent owner is proper. A third party, however, may not submit admissions of the patent owner made outside the record. Such a submission would be outside the scope of reexamination.

G *Claim Interpretation and Treatment*

Original patent claims will be examined *only* on the basis of prior art patents or printed publications applied under the appropriate parts of 35 U.S.C. 102 and 103. See MPEP § 2217. During reexamination, claims are given the broadest reasonable interpretation consistent with the specification and limitations in the specification are not read into the claims *(In re Yamamoto,* 740 F.2d 1569, 222 USPQ 934 (Fed. Cir. 1984)). In a reexamination proceeding involving claims of an expired patent, which are not subject to amendment, a policy of narrow construction should be applied. Such a policy favors a construction of a patent claim that will render it valid; i.e., a narrow construction, over a broad construction that would render it invalid. See *In re Papst-Motoren*, 1 USPQ2d 1659 (Bd. Pat. App. & Inter. 1986). The statutory presumption of validity, 35 U.S.C. 282, has no application in reexamination (*In re Etter*, 756 F.2d 852, 225 USPQ 1 (Fed. Cir. 1985)).

II. COMPLIANCE WITH 35 U.S.C. 112

Where new claims are presented or where any part of the disclosure is amended, the claims of the reexamination proceeding, are to be examined for compliance with 35 U.S.C. 112. Consideration of 35 U.S.C. 112 issues should, however, be limited to the amendatory (e.g., new language) matter. For example, a claim which is amended or a new claim which is presented containing a limitation not found in the original patent claim should be considered for compliance under 35 U.S.C. 112 only with respect to that limitation. To go further would be inconsistent with the statute to the extent that 35 U.S.C. 112 issues would be raised as to matter in the original patent claim. Thus, a term in a patent claim which the examiner might deem to be too broad cannot be considered as too broad in a new or amended claim *unless* the amendatory matter in the new or amended claim creates the issue.

A. *35 U.S.C. 112 Issues To Be Considered*

Compliance of new or amended claims with the enablement and/or description requirements of the first paragraph of 35 U.S.C. 112 should be considered as to the amendatory and new text in the reexamination proceeding. Likewise, the examiner should determine whether the new or amended claims comply with the second paragraph of 35 U.S.C. 112. MPEP § 2163 - § 2173.05(v) provide extensive guidance as to these matters.

B. *New Matter*

35 U.S.C. 305 provides for examination under 35 U.S.C. 132, which prohibits the introduction of new matter into the disclosure. Thus, the question of new matter should be considered in a reexamination proceeding. See MPEP § 2163.06 as to the relationship of the written description requirement of the first paragraph of 35 U.S.C. 112 and the new matter prohibition under 35 U.S.C. 132. Where the new matter is added to the claims or affects claim limitations, the claims should be rejected under 35 U.S.C. 112, first paragraph, for failing to meet the written description requirement.

C. *Amendment of the Specification*

Where the specification is amended in a reexamination proceeding, the examiner should make certain that the requirements of 35 U.S.C. 112 are met. An amendment to the specification can redefine the scope of the terms in a claim such that the claim is no longer clear or is not supported by the specification. Thus, an amendment to the specification can result in the failure of the claims to comply with 35 U.S.C. 112, even where the claims are not amended in any respect.

III. CLAIMS IN PROCEEDING MUST NOT ENLARGE SCOPE OF THE CLAIMS OF THE PATENT

Where new or amended claims are presented or where any part of the disclosure is amended, the claims of the reexamination proceeding should be examined under 35 U.S.C. 305, to determine whether they enlarge the scope of the original claims. 35 U.S.C. 305 states that "no proposed amended or new claim enlarging the scope of the claims of the patent will be permitted in a reexamination proceeding...".

A. *Criteria for Enlargement of the Scope of the Claims*

A claim presented in a reexamination proceeding "enlarges the scope" of the claims of the patent being reexamined where the claim is broader than each and every claim of the patent. See MPEP § 1412.03 for guidance as to when the presented claim is considered to be a broadening claim as compared with the claims of the patent, i.e., what is broadening and what is not. If a claim is considered to be a broadening claim for purposes of reissue, it is likewise considered to be a broadening claim in reexamination.

B. *Amendment of the Specification*

Where the specification is amended in a reexamination proceeding, the examiner should make certain that the amendment to the specification does not enlarge the scope of the claims of the patent. An amendment to the specification can enlarge the scope of the claims by redefining the scope of the terms in a claim, even where the claims are not amended in any respect.

C. *Rejection of Claims Where There Is Enlargement*

Any claim in a reexamination proceeding which enlarges the scope of the claims of the patent should be rejected under 35 U.S.C. 305. Form paragraph 22.11 is to be employed in making the rejection.

¶ 22.11 Rejection, 35 U.S.C. 305, Claim Enlarges Scope of Patent

Claim **[1]** rejected under 35 U.S.C. 305 as enlarging the scope of the claim(s) of the patent being reexamined. In 35 U.S.C. 305, it is stated that "[n]o proposed amended or new claim enlarging the scope of a claim of the patent will be permitted in a reexamination proceeding... ." A claim presented in a reexamination "enlarges the scope" of the patent claim(s) where the claim is broader than any claim of the patent. A claim is broader in scope than the original claims if it contains within its scope any conceivable product or process which would not have infringed the originalpatent. A claim is broadened if it is broader in any one respect, even though it may be narrower in other respects.

[2]

Examiner Note:

The claim limitations which are considered to broaden the scope should be identified and explained in bracket 2. See MPEP § 2258.

IV. OTHER MATTERS

Where some of the patent claims in a patent being reexamined have been the subject of a prior Office or court decision, see MPEP § 2242. Where other proceedings involving the patent are copending with the reexamination proceeding, see MPEP § 2282 - § 2286.

Even when a request for reexamination does not present a substantial new question as to all claims, each claim of the patent will be reexamined. The

resulting reexamination certificate will indicate the status of all of the patent claims and any added patentable claims.

Restriction requirements cannot be made in a reexamination proceeding since no statutory basis exists for restriction in a reexamination proceeding.

There are matters ancillary to reexamination which are necessary and incident to patentability which will be considered. Amendments may be made to the specification to correct, for example, an inadvertent failure to claim foreign priority or the continuing status of the patent relative to a parent application if such correction is necessary to overcome a reference applied against a claim of the patent. No renewal of previously made claims for foreign priority under 35 U.S.C. 119 or continuing status of the application under 35 U.S.C. 120, is necessary during reexamination. Correction of inventorship may also be made during reexamination. See 37 CFR 1.324 and MPEP § 1481 for petition for correction of inventorship in a patent. If a petition filed under 37 CFR 1.324 is granted, a Certificate of Correction indicating the change of inventorship will not be issued, because the reexamination certificate that will ultimately issue will contain the appropriate change-of-inventorship information (i.e., the Certificate of Correction is in effect merged with the reexamination certificate).

Affidavits under 37 CFR 1.131 and 1.132 may be utilized in a reexamination proceeding. Note, however, that an affidavit under 37 CFR 1.131 may not be used to "swear back" of a reference patent if the reference patent is claiming the same invention as the patent undergoing reexamination. In such a situation, the patent owner may, if appropriate, seek to raise this issue in an interference proceeding via an appropriate reissue application if such a reissue application may be filed.

Patent claims not subject to reexamination because of their prior adjudication by a court should be identified. See MPEP § 2242.

For handling a dependent claim in reexamination proceedings, see MPEP § 2260.01. All added claims will be examined.

Where grounds set forth in a prior Office or Federal Court decision, which are not based on patents or printed publications clearly raise questions as to the validity of the claims, the examiner's Office action should clearly state that the claims have not been examined as to those grounds not based on patents or printed publications stated in the prior decision. See 37 CFR 1.552(c). See *In re Knight*, 217 USPQ 294 (Comm'r Pat. 1982). All claims under reexamination should, however, be reexamined, but only on the basis of prior patents and printed publications.

If questions other than those indicated above (for example, questions of patentability based on the public use or sale, fraud, abandonment under 35 U.S.C. 102(c), etc.) are discovered during a reexamination proceeding, the existence of such questions will be noted by the examiner in an Office action, in which case the patent owner may desire to consider the advisability of filing a reissue application to have such questions considered and resolved. Such questions could arise in a reexamination requester's 37 CFR 1.510 request or in a 37 CFR 1.535 reply by the requester. Note form paragraph 22.03.

¶ 22.03 Issue Not Within Scope of Reexamination

It is noted that an issue not within the scope of reexamination proceedings has been raised. **[1]**. The issue will not be considered in a reexamination proceeding. 37 CFR 1.552(c). While this issue is not within the scope of reexamination, the patentee is advised that it may be desirable to consider filing a reissue application provided that the patentee believes one or more claims to be partially or wholly inoperative or invalid based upon the issue.

Examiner Note:

1. In bracket 1, identify the issues.
2. This paragraph may be used either when the request for reexamination is based upon issues such as public use or sale, fraud, or abandonment or the invention, or when questions are discovered during a reexamination proceeding.

Where a request for reexamination is filed on a patent after it has been reissued, reexamination will be denied because the patent on which the request for reexamination is based has been surrendered. Should reexamination of the reissued patent be desired, a new request for reexamination including, and based on, the specification and claims of the reissue patent must be filed.

Any amendment made by the patent owner to accompany the initial reexamination request, or in later prosecution of the reexamination proceeding, should treat the changes made by the granted reissue patent as the text of the patent, and all bracketing and underlining made with respect to the patent **as changed by the reissue**.

Where the reissue patent issues after the filing of a request for reexamination, see MPEP § 2285.

2259 Collateral Estoppel in Reexamination Proceedings

MPEP § 2242 and § 2286 relate to the Office policy controlling the determination on a request for reexamination and the subsequent examination phase of the reexamination where there has been a Federal Court decision on the merits as to the patent for which reexamination is requested. Since claims finally held invalid by a Federal Court will be withdrawn from consideration and not reexamined during a reexamination proceeding, a rejection on the grounds of collateral estoppel will not be appropriate in reexamination.

2260 Office Actions

37 CFR 1.104. Nature of examination.

(a) *Examiner's action.*

(1) On taking up an application for examination or a patent in a reexamination proceeding, the examiner shall make a thorough study thereof and shall make a thorough investigation of the available prior art relating to the subject matter of the claimed invention. The examination shall be complete with respect both to compliance of the application or patent under reexamination with the applicable statutes and rules and to the patentability of the invention as claimed, as well as with respect to matters of form, unless otherwise indicated.

(2) The applicant, or in the case of a reexamination proceeding, both the patent owner and the requester, will be notified of the examiner's action. The reasons for any adverse action or any objection or requirement will be stated in an Office action and such information or references will be given as may be useful in aiding the applicant, or in the case of a reexamination proceeding the patent owner, to judge the propriety of continuing the prosecution.

(3) An international-type search will be made in all national applications filed on and after June 1, 1978.

(4) Any national application may also have an international-type search report prepared thereon at the time of the national examination on the merits, upon specific written request therefor and payment of the international-type search report fee set forth in § 1.21(e). The Patent and Trademark Office does not require that a formal report of an international-type search be prepared in order to obtain a search fee refund in a later filed international application.

(b) *Completeness of examiner's action.* The examiner's action will be complete as to all matters, except that in appropriate circumstances, such as misjoinder of invention, fundamental defects in the application, and the like, the action of the examiner may be limited to such matters before further action is made. However, matters of form need not be raised by the examiner until a claim is found allowable.

(c) *Rejection of claims.*

(1) If the invention is not considered patentable, or not considered patentable as claimed, the claims, or those considered unpatentable will be rejected.

(2) In rejecting claims for want of novelty or for obviousness, the examiner must cite the best references at his or her command. When a reference is complex or shows or describes inventions other than that claimed by the applicant, the particular part relied on must be designated as nearly as practicable. The pertinence of each reference, if not apparent, must be clearly explained and each rejected claim specified.

(3) In rejecting claims the examiner may rely upon admissions by the applicant, or the patent owner in a reexamination proceeding, as to any matter affecting patentability and, insofar as rejections in applications are concerned, may also rely upon facts within his or her knowledge pursuant to paragraph (d)(2) of this section.

(4) Subject matter which is developed by another person which qualifies as prior art only under 35 U.S.C. 102(e), (f) or (g) may be used as prior art under 35 U.S.C. 103 against a claimed invention unless the entire rights to the subject matter and the claimed invention were commonly owned by the same person or organization or subject to an obligation of assignment to the same person or organization at the time the claimed invention was made.

(5) The claims in any original application naming an inventor will be rejected as being precluded by a waiver in a published statutory invention registration naming that inventor if the same subject matter is claimed in the application and the statutory invention registration. The claims in any reissue application naming an inventor will be rejected as being precluded by a waiver in a published statutory invention registration naming that inventor if the reissue application seeks to claim subject matter:

(i) Which was not covered by claims issued in the patent prior to the date of publication of the statutory invention registration; and

(ii) Which was the same subject matter waived in the statutory invention registration.

(d) *Citation of references.*

(1) If domestic patents are cited by the examiner, their numbers and dates, and the names of the patentees will be stated. If domestic patent application publications are cited by the examiner, their publication number, publication date, and the names of the applicants will be stated. If foreign published applications or patents are cited, their nationality or country, numbers and dates, and the names of the patentees will be stated, and such other data will be furnished as may be necessary to enable the applicant, or in the case of a reexamination proceeding, the patent owner, to identify the published applications or patents cited. In citing foreign published applications or patents, in case only a part of the document is involved, the particular pages and sheets containing the parts relied upon will be identified. If printed publications are cited, the author (if any), title, date, pages or plates, and place of publication, or place where a copy can be found, will be given.

(2) When a rejection in an application is based on facts within the personal knowledge of an employee of the Office, the data shall be as specific as possible, and the reference must be

supported, when called for by the applicant, by the affidavit of such employee, and such affidavit shall be subject to contradiction or explanation by the affidavits of the applicant and other persons.

(e) *Reasons for allowance.* If the examiner believes that the record of the prosecution as a whole does not make clear his or her reasons for allowing a claim or claims, the examiner may set forth such reasoning. The reasons shall be incorporated into an Office action rejecting other claims of the application or patent under reexamination or be the subject of a separate communication to the applicant or patent owner. The applicant or patent owner may file a statement commenting on the reasons for allowance within such time as may be specified by the examiner. Failure by the examiner to respond to any statement commenting on reasons for allowance does not give rise to any implication.

It is intended that the examiner's first *ex parte* action on the merits be the primary action to establish the issues which exist between the examiner and the patent owner insofar as the patent is concerned. At the time the first action is issued, the patent owner has already been permitted to file a statement and an amendment pursuant to 37 CFR 1.530; and the reexamination requester, if the requester is not the patent owner, has been permitted to reply thereto pursuant to 37 CFR 1.535. Thus, at this point, the issues should be sufficiently focused to enable the examiner to make a definitive first *ex parte* action on the merits which should clearly establish the issues which exist between the examiner and the patent owner insofar as the patent is concerned. In view of the fact that the examiner's first action will clearly establish the issues, the first action should include a statement cautioning the patent owner that a complete response should be made to the action since the next action is expected to be a final action. The first action should further caution the patent owner that the requirements of 37 CFR 1.116(b) will be strictly enforced after final action and that any amendments after a final action must include "a showing of good and sufficient reasons why they are necessary and were not earlier presented" in order to be considered. The language of form paragraph 22.04 is appropriate for inclusion in the first Office action:

¶ 22.04 Papers To Be Submitted in Response to Action

In order to ensure full consideration of any amendments, affidavits or declarations, or other documents as evidence of patentability, such documents **must** be submitted in response to this Office action. Submissions after the next Office action, which is intended to be a final action, will be governed by the requirements of 37 CFR 1.116, which will be strictly enforced.

2260.01 Dependent Claims

If a base patent claim has been rejected or canceled, any claim which is directly or indirectly dependent thereon should be confirmed or allowed if the dependent claim is otherwise allowable. The dependent claim should *not* be objected to or rejected merely because it depends on a rejected or canceled patent claim. No requirement should be made for rewriting the dependent claim in independent form. As the original patent claim numbers are not changed in a reexamination proceeding, the content of the canceled base claim would remain in the printed patent and would be available to be read as a part of the confirmed or allowed dependent claim.

If a new base claim (a base claim other than a base claim appearing in the patent) has been canceled in a reexamination proceeding, a claim which depends thereon should be rejected as incomplete. If a new base claim is rejected, a claim dependent thereon should be objected to if it is otherwise patentable and a requirement made for rewriting the dependent claim in independent form.

2261 Special Status for Action

35 U.S.C. 305. Conduct of reexamination proceedings.

*****

All reexamination proceedings under this section, including any appeal to the Board of Patent Appeals and Interferences, will be conducted with special dispatch within the Office.

In view of the requirement for "special dispatch," reexamination proceedings will be "special" throughout their pendency in the Office. The examiner's first action on the merits should be completed within *1 month* of the filing date of the requester's reply (37 CFR 1.535), or within *1 month* of the filing date of the patent owner's statement (37 CFR 1.530) if there is no requester other than the patent owner. If no submissions are made under either 37 CFR 1.530 or 37 CFR 1.535, the first action on the merits should be completed within *1 month* of any due date for such submission. Mailing of the first action should occur within 6 WEEKS after the appropriate filing or due date of any statement and any reply thereto.

Any cases involved in litigation, whether they are reexamination proceedings or reissue applications, will have priority over all other cases. Reexamination proceedings not involved in litigation

will have priority over all other cases except reexaminations or reissues involved in litigation.

2262 Form and Content of Office Action

The examiner's first Office action will be a statement of the examiner's position and should be so complete that the second Office action can properly be made a final action. See MPEP § 2271.

All Office actions are to be written or dictated and then typed. The first Office action must be sufficiently detailed that the pertinency and manner of applying the cited prior art to the claims is clearly set forth therein. If the examiner concludes in any Office action that one or more of the claims are patentable over the cited patents or printed publications, the examiner should indicate why the claim(s) is clearly patentable in a manner similar to that used to indicate reasons for allowance (MPEP § 1302.14). If the record is clear why the claim(s) is/are clearly patentable, the examiner may refer to the particular portions of the record which clearly establish the patentability of the claim(s). The first action should also respond to the substance of each argument raised by the patent owner and requester pursuant to 37 CFR 1.510, 1.530, and 1.535. If arguments are presented which are inappropriate in reexamination, they should be treated in accordance with 37 CFR 1.552(c). It is especially important that the examiner's action in reexamination be thorough and complete in view of the finality of a reexamination proceeding and the patent owner's inability to file a continuation proceeding.

Normally, the title will not need to be changed during reexamination. If a change of the title is necessary, patent owner should be notified of the need to provide an amendment changing the title as early as possible in the prosecution as a part of an Office Action. If all of the claims are found to be patentable and a Notice of Intent to Issue Reexamination Certificate has been or is to be mailed, a change to the title of the invention by the examiner may only be done by way of an Examiner's Amendment. Changing the title and merely initialing the change is NOT permitted in reexamination.

A sample of a first Office action in a reexamination proceeding is set forth below.

UNITED STATES PATENT AND TRADEMARK OFFICE

COMMISSIONER FOR PATENTS
UNITED STATES PATENT AND TRADEMARK OFFICE
WASHINGTON, D.C. 20231
www.uspto.gov

DO NOT USE IN PALM PRINTER

(THIRD PARTY REQUESTER'S CORRESPONDENCE ADDRESS)

Requester
12345 Anystreet Road
Anytown, VA 22222

EX PARTE REEXAMINATION COMMUNICATION TRANSMITTAL FORM

REEXAMINATION CONTROL NO. *90/999,999*.

PATENT NO. *9,999,999* .

ART UNIT *3725*.

Enclosed is a copy of the latest communication from the United States Patent and Trademark Office in the above identified *ex parte* reexamination proceeding (37 CFR 1.550(f)).

Where this copy is supplied after the reply by requester, 37 CFR 1.535, or the time for filing a reply has passed, no submission on behalf of the *ex parte* reexamination requester will be acknowledged or considered (37 CFR 1.550(g)).

PTOL-465 (Rev.04-01)

Office Action in Ex Parte Reexamination	Control No. 90/999,999	Patent Under Reexamination 9,999,999	
	Examiner Kenneth Schor	Art Unit 3725	

-- The MAILING DATE of this communication appears on the cover sheet with the correspondence address --

a☒ Responsive to the communication(s) filed on *19 September 1999*. b☐ This action is made FINAL.
c☐ A statement under 37 CFR 1.530 has not been received from the patent owner.

A shortened statutory period for response to this action is set to expire _____ month(s) from the mailing date of this letter. Failure to respond within the period for response will result in termination of the proceeding and issuance of an *ex parte* reexamination certificate in accordance with this action. 37 CFR 1.550(d). **EXTENSIONS OF TIME ARE GOVERNED BY 37 CFR 1.550(c).** If the period for response specified above is less than thirty (30) days, a response within the statutory minimum of thirty (30) days will be considered timely.

Part I THE FOLLOWING ATTACHMENT(S) ARE PART OF THIS ACTION:

1. ☒ Notice of References Cited by Examiner, PTO-892.
2. ☒ Information Disclosure Statement, PTO-1449.
3. ☐ Interview Summary, PTO-474.
4. ☐ _____.

Part II SUMMARY OF ACTION

1a. ☒ Claims *4-6* are subject to reexamination.

1b. ☒ Claims *1-3* are not subject to reexamination.

2. ☐ Claims _____ have been canceled in the present reexamination proceeding.

3. ☒ Claims *5* are patentable and/or confirmed.

4. ☒ Claims *4 and 6* are rejected.

5. ☐ Claims _____ are objected to.

6. ☐ The drawings, filed on _____ are acceptable.

7. ☐ The proposed drawing correction, filed on _____ has been (7a)☐ approved (7b)☐ disapproved.

8. ☐ Acknowledgment is made of the priority claim under 35 U.S.C. § 119(a)-(d) or (f).

a)☐ All b)☐ Some* c)☐ None of the certified copies have

1☐ been received.

2☐ not been received.

3☐ been filed in Application No. _____.

4☐ been filed in reexamination Control No. _____.

5☐ been received by the International Bureau in PCT application No. _____.

* See the attached detailed Office action for a list of the certified copies not received.

9. ☐ Since the proceeding appears to be in condition for issuance of an *ex parte* reexamination certificate except for formal matters, prosecution as to the merits is closed in accordance with the practice under *Ex parte* Quayle, 1935 C.D. 11, 453 O.G. 213.

10. ☐ Other:

cc: Requester (if third party requester)

U.S. Patent and Trademark Office
PTOL-466 (Rev. 04-01) **Office Action in Ex Parte Reexamination** Part of Paper No. 5

Claims 1-3 of the Smith patent are not being reexamined in view of the final decision in the ABC Corp. v. Smith, 999 USPQ2d 99 (Fed. Cir. 1999). Claims 1-3 were held not valid by the Court.

The following is a quotation of 35 U.S.C. 103 which forms the basis for all obviousness rejections set forth in this Office action:

> A patent may not be obtained though the invention is not identically disclosed or described as set forth in section 102 of this title, if the differences between the subject matter sought to be patented and the prior art are such that the subject matter as a whole would have been obvious at the time the invention was made to a person having ordinary skill in the art to which said subject matter pertains. Patentability shall not be negatived by the manner in which the invention was made.
>
> Subject matter developed by another person, which qualifies as prior art only under subsection (f) or (g) of section 102 of this title, shall not preclude patentability under this section where the subject matter and the claimed invention were, at the time the invention was made, owned by the same person, or subject to an obligation of assignment to the same person.

Claims 4 and 6 are rejected under 35 U.S.C. 103 as being unpatentable over Berridge in view of McGee.

Berridge teaches extruding a chlorinated polymer using the same extrusion structure recited in Claims 4 and 6 of the Smith patent. However, Berridge does not show supporting the extrusion barrel at 30 degrees to the horizontal, using spring supports. McGee teaches spring supporting an extrusion barrel at an angle of 25-35 degrees, in order to decrease imperfections in extruded chlorinated polymers. It would have been obvious to one of ordinary skill in the polymer extrusion art to support the extrusion barrel of Berridge on springs and at an angle of 30 degrees because McGee teaches this to be known in the polymer extrusion art for decreasing imperfections in extruded chlorinated polymers.

Claim 5 is patentable over the prior art patents and printed publications because of the specific extrusion die used with the Claim 4 spring-supported barrel. This serves to even further reduce imperfections in the extruded chlorinated polymers and is not taught by the art of record, alone or in combination.

It is noted that an issue not within the scope of reexamination proceedings has been raised. In the above-cited final Court decision, a question is raised as to the possible public use of the invention of Claim 6. This question was also raised by requester in the reply to the owner's statement. The issue will not be considered in a reexamination proceeding (37 CFR 1.552(c)). While this issue is not within the scope of reexamination, the patentee is advised that it may be desirable to consider filing a reissue application provided that the patentee believes one or more claims to be partially or wholly inoperative or invalid based upon the issue.

Swiss Patent 80555 and the American Machinist article are cited to show cutting and forming extruder apparatus somewhat similar to that claimed in the Smith patent.

In order to ensure full consideration of any amendments,affidavits, or declarations, or other documents as evidence of patentability, such documents must be submitted in response to this Office action. Submissions after the next Office action, which is intended to be a final action, will be governed by the requirements of 37 CFR 1.116 which will be strictly enforced.

Any inquiry concerning this communication should be directed to Kenneth Schor at telephone number (703) 308-0000

/s/
Kenneth Schor
Primary Examiner, Technology Center 3700

Reviewed for procedure
MPEP § 2286

/s/

TC Director, TC 3700

PTO/SB/42 (10-96)
Approved for use through 10/31/99. OMB 0651-0031
Patent and Trademark Office; U.S. DEPARTMENT OF COMMERCE
Under the Paperwork Reduction Act of 1995, no persons are required to respond to a collection of information unless it displays a valid OMB control number.

Sheet 1 of 1

37 CFR 1.501
INFORMATION DISCLOSURE CITATION IN A PATENT
(Use several sheets if necessary)

Docket Number (Optional)	Patent Number 9,999,999
Applicant: Joseph Smith	
Issue Date: July 7, 1997	Group Art Unit: 3725

U. S. PATENT DOCUMENTS

EXAMINER INITIAL	DOCUMENT NUMBER	DATE	NAME	CLASS	SUBCLASS	FILING DATE IF APPROPRIATE
KS	5 9 4 2 2 5	11-1897	BERRIDGE	140	106	

FOREIGN PATENT DOCUMENTS

	DOCUMENT NUMBER	DATE	COUNTRY	CLASS	SUBCLASS	Translation YES	Translation NO
KS	8 0 5 5 5	10-1918	SWITZERLAND	---	---	X	

OTHER DOCUMENTS (Including Author, Title, Date, Pertinent Pages, Etc.)

KS	"American Machinist" magazine, October 16, 1950 issue, page 169 (copy located in class 72, subclass 409)

EXAMINER	DATE CONSIDERED

Burden Hour Statement: This form is estimated to take 2.0 hours to complete. Time will vary depending upon the needs of the individual case. Any comments on the amount of time you are required to complete this form should be sent to the Chief Information Officer, Patent and Trademark Office, Washington, DC 20231. DO NOT SEND FEES OR COMPLETED FORMS TO THIS ADDRESS. SEND TO: Assistant Commissioner for Patents, Washington, DC 20231.

2263 Time for Response

A shortened statutory period of 2 months will be set for response to Office actions in reexaminations, except where the reexamination results from a court order or litigation is stayed for purposes of reexamination, in which case the shortened statutory period will be set at 1 month. See MPEP § 2286. Note, however, that this 1-month policy does NOT apply to the 2-month period for the filing of a statement under 37 CFR 1.530, which 2-month period is set by 35 U.S.C. 304.

Where a reexamination proceeding has been stayed because of a copending reissue application, and the reissue application is abandoned, all actions in the reexamination after the stay has been removed will set a 1-month shortened statutory period unless a longer period for response is clearly warranted by nature of the examiner's action; see MPEP § 2285.

2264 Mailing of Office Action

Reexamination forms are structured so that the PALM printer can be used to print the identifying information for the reexamination file and the mailing address — usually the address of the patent owner's legal representative. Where there is no legal representative, the patent owner's address is printed. Only the first patent owner's address is printed where there are multiple patent owners. A transmittal form PTOL-465 is also provided for each patent owner in addition to the one named on the top of the Office action.

All actions in a third party requester reexamination will have a copy mailed to the third party requester. A transmittal form PTOL-465 must be used in providing the third party requester with a copy of each Office action.

A completed transmittal form PTOL-465 will be provided as needed for any third party requester and additional patent owner (discussed above), and the appropriate address will be entered on it. The number of transmittal forms provides a ready reference for the number of copies of each Office action to be made, and the transmittal form permits use of the window envelopes in mailing the copies of the action to parties other than the patent owner.

When the requester is the patent owner, the notation "No copies needed - Requester is Owner" will be placed on the reexamination file. A blank transmittal form having the control number written on it and being marked "No copies needed - Requester is Owner" could also be placed inside the reexamination file to alert Office personnel and anyone else taking part in the processing of the reexamination that no additional copies are needed.

2265 Extension of Time

37 CFR 1.550. Conduct of ex parte reexamination proceedings.

*****

(c) The time for taking any action by a patent owner in an *ex parte* reexamination proceeding will be extended only for sufficient cause and for a reasonable time specified. Any request for such extension must be filed on or before the day on which action by the patent owner is due, but in no case will the mere filing of a request effect any extension. See § 1.304(a) for extensions of time for filing a notice of appeal to the U.S. Court of Appeals for the Federal Circuit or for commencing a civil action.

*****

The provisions of 37 CFR 1.136 (a) and (b) are *NOT* applicable to reexamination proceedings under any circumstances. Public Law 97-247 amended 35 U.S.C. 41 to authorize the Commissioner to charge fees for extensions of time to take action in an "application." A reexamination proceeding does not involve an "application." 37 CFR 1.136 authorizes extensions of the time period only in an application in which an applicant must respond or take action. There is neither an "application," nor an "applicant" involved in a reexamination proceeding.

An extension of time in a reexamination proceeding is requested pursuant to 37 CFR 1.550(c). Accordingly, a request for an extension must be filed (1) on or before the day on which action by the patent owner is due and (2) must set forth sufficient reason for the extension. Requests for an extension of time in a reexamination proceeding will be considered only after the decision to grant or deny reexamination is mailed. Any request filed before that decision will be denied.

The certificate and the certificate of transmission procedures (37 CFR 1.8) and the "Express Mail" mailing procedure (37 CFR 1.10) may be used to file a request for extension of time, as well as any other paper in an existing reexamination proceeding (see MPEP § 2266).

With the exception of an automatic 1-month extension of time to take further action which will be

granted upon filing a first timely response to a final Office action (see MPEP § 2272), *all* requests for extensions of time to file a patent owner statement under 37 CFR 1.530 or respond to any subsequent Office action in a reexamination proceeding must be filed under 37 CFR 1.550(c) and will be decided by the Director of the Technology Center (TC) conducting the reexamination proceeding. These requests for an extension of time will be granted only for sufficient cause and must be filed on or before the day on which action by the patent owner is due. In no case will mere filing of a request for extension of time automatically effect any extension. Evaluation of whether sufficient cause has been shown for an extension must be made in the context of providing the patent owner with a fair opportunity to present an argument against any attack on the patent, and the requirement of the statute (35 U.S.C. 305) that the proceedings be conducted with special dispatch. In no case, except in the after final practice noted above, will the mere filing of a request effect any extension.

Any request for an extension of time in a reexamination proceeding must fully state the reasons therefor. All requests must be submitted in a separate paper which will be forwarded to the TC Director for action. A request for an extension of the time period to file a petition from the denial of a request for reexamination can only be entertained by filing a petition under 37 CFR 1.183 with appropriate fee to waive the time provisions of 37 CFR 1.515(c). Since the reexamination examination process is intended to be essentially *ex parte*, the party requesting reexamination can anticipate that requests for an extension of time to file a petition under 37 CFR 1.515(c) will be granted only in extraordinary situations.

The time for filing a third party requester reply under 37 CFR 1.535 to the patent owner's statement cannot be extended under any circumstances. No extensions will be permitted to the time for filing a reply under 37 CFR 1.535 by the requester because the 2-month period for filing the reply is a statutory period. It should be noted that a statutory period for response cannot be waived. See MPEP § 2251.

Ex parte prosecution will be conducted by initially setting either a 1-month or a 2-month shortened period for response, see MPEP § 2263. The patent owner also will be given a 2-month statutory period after the order for reexamination to file a statement. See 37 CFR 1.530(b). First requests for extensions of these statutory time periods will be granted for sufficient cause, and for a reasonable time specified — usually 1 month. The reasons stated in the request will be evaluated by the TC Director, and the requests will be favorably considered where there is a factual accounting of reasonably diligent behavior by all those responsible for preparing a response within the statutory time period. Second or subsequent requests for extensions of time or requests for more than 1 month will be granted only in extraordinary situations. Any request for an extension of time in a reexamination proceeding to file a notice of appeal to the Board of Patent Appeals and Interferences, a brief or reply brief, or a request for reconsideration or rehearing will be considered under the provisions of 37 CFR 1.550(c). The time for filing the notice and reasons of appeal to the U.S. Court of Appeals for the Federal Circuit or for commencing a civil action will be considered under the provisions of 37 CFR 1.304.

Form paragraph 22.04.01 may be used to notify the parties in a reexamination proceeding the extension of time practice in reexamination.

¶ 22.04.01 Extension of Time in Reexamination

Extensions of time under 37 CFR 1.136(a) will not be permitted in these proceedings because the provisions of 37 CFR 1.136 apply only to "an applicant" and not to parties in a reexamination proceeding. Additionally, 35 U.S.C. 305 requires that reexamination proceedings "will be conducted with special dispatch" (37 CFR 1.55(a)). Extensions of time in *ex parte* reexamination proceedings are provided for in 37 CFR 1.550(c).

FINAL ACTION — TIME FOR RESPONSE

The after-final practice in reexamination proceedings did not change on October 1, 1982 (at which time a change in practice was made for applications), and the automatic extension of time policy for response to a final rejection and associated practice are still in effect in reexamination proceedings.

The filing of a timely first response to a final rejection having a shortened statutory period for response is construed as including a request to extend the shortened statutory period for an additional month, which will be granted even if previous extensions have been granted, but in no case may the period for response exceed 6 months from the date of the final action. Even if previous extensions have been granted, the primary examiner is authorized to grant the request for extension of time which is implicit in the filing of

a timely first response to a final rejection. It should be noted that the filing of any timely first response to a final rejection will be construed as including a request to extend the shortened statutory period for an additional month, even an informal response and even a response that is not signed. An object of this practice is to obviate the necessity for appeal merely to gain time to consider the examiner's position in reply to an amendment timely filed after final rejection. Accordingly, the shortened statutory period for response to a final rejection to which a proposed first response has been received will be extended 1 month. Note that the Office policy of construing a response after final as inherently including a request for a 1-month extension of time applies only to the first response to the final rejection.

It should be noted that the patent owner is entitled to know the examiner's ruling on a timely response filed after final rejection before being required to file a notice of appeal. Notification of the examiner's ruling should reach the patent owner with sufficient time for the patent owner to consider the ruling and act on it.

Normally, examiners will complete a response to an amendment after final rejection within 5 days after receipt thereof. In those situations where the advisory action cannot be mailed in sufficient time for the patent owner to consider the examiner's position with respect to the amendment after final rejection (or other patent owner paper) and act on it before termination of the proceeding, the granting of additional time to complete the response to the final rejection or to take other appropriate action would be appropriate. See *Theodore Groz & Sohne & Ernst Bechert Nadelfabrik KG v. Quigg*, 10 USPQ2d 1787 (D.D.C. 1988). The additional time should be granted by the examiner, and the time granted should be set forth in the advisory Office action. The advisory action form (PTOL-467) states that "THE PERIOD FOR RESPONSE IS EXTENDED TO RUN ___ MONTHS FROM THE DATE OF THE FINAL REJECTION." The blank before "MONTHS" should be filled in with an integer (2, 3, 4, 5, or 6); fractional months should not be indicated. In no case can the period for reply to the final rejection be extended to exceed 6 months from the mailing date of the final rejection. An appropriate response (e.g., a second or subsequent amendment or a notice of appeal) must be filed within the extended period for response. If patent owner elects to file a second or subsequent amendment, it must place the reexamination in condition for allowance. If the amendment does not place the reexamination in condition for allowance, the reexamination proceeding will stand terminated under 37 CFR 1.550(d) unless an appropriate notice of appeal was filed before the expiration of the response period.

EXTENSIONS OF TIME TO SUBMIT AFFIDAVITS AFTER FINAL REJECTION

Frequently, patent owners request an extension of time, stating as a reason therefor that more time is needed in which to submit an affidavit. When such a request is filed after final rejection, the granting of the request for extension of time is without prejudice to the right of the examiner to question why the affidavit is now necessary and why it was not earlier presented. If the patent owner's showing is insufficient, the examiner may deny entry of the affidavit, notwithstanding the previous grant of an extension of time to submit it. The grant of an extension of time in these circumstances serves merely to keep the proceeding from becoming terminated while allowing the patent owner the opportunity to present the affidavit or to take other appropriate action. Moreover, prosecution of the reexamination to save it from termination must include such timely, complete and proper action as required by 37 CFR 1.113. The admission of the affidavit for purposes other than allowance of the claims, or the refusal to admit the affidavit, and any proceedings relative, thereto, shall not operate to save the proceeding from termination.

Implicit in the above practice is the fact that affidavits submitted after final rejection are subject to the same treatment as amendments submitted after final rejection. See *In re Affidavit Filed After Final Rejection*, 152 USPQ 292, 1966 C.D. 53 (Comm'r Pat. 1966).

2266 Responses

37 CFR 1.111. Reply by applicant or patent owner to a non-final Office action.

(a)(1) If the Office action after the first examination (§ 1.104) is adverse in any respect, the applicant or patent owner, if he or she persists in his or her application for a patent or reexamination proceeding, must reply and request reconsideration or further

examination, with or without amendment. See §§ 1.135 and 1.136 for time for reply to avoid abandonment.

(2) A second (or subsequent) supplemental reply will be entered unless disapproved by the Commissioner. A second (or subsequent) supplemental reply may be disapproved if the second (or subsequent) supplemental reply unduly interferes with an Office action being prepared in response to the previous reply. Factors that will be considered in disapproving a second (or subsequent) supplemental reply include:

(i) The state of preparation of an Office action responsive to the previous reply as of the date of receipt (§ 1.6) of the second (or subsequent) supplemental reply by the Office; and

(ii) The nature of any changes to the specification or claims that would result from entry of the second (or subsequent) supplemental reply.

(b) In order to be entitled to reconsideration or further examination, the applicant or patent owner must reply to the Office action. The reply by the applicant or patent owner must be reduced to a writing which distinctly and specifically points out the supposed errors in the examiner's action and must reply to every ground of objection and rejection in the prior Office action. The reply must present arguments pointing out the specific distinctions believed to render the claims, including any newly presented claims, patentable over any applied references. If the reply is with respect to an application, a request may be made that objections or requirements as to form not necessary to further consideration of the claims be held in abeyance until allowable subject matter is indicated. The applicant's or patent owner's reply must appear throughout to be a *bona fide* attempt to advance the application or the reexamination proceeding to final action. A general allegation that the claims define a patentable invention without specifically pointing out how the language of the claims patentably distinguishes them from the references does not comply with the requirements of this section.

(c) In amending in reply to a rejection of claims in an application or patent under reexamination, the applicant or patent owner must clearly point out the patentable novelty which he or she thinks the claims present in view of the state of the art disclosed by the references cited or the objections made. The applicant or patent owner must also show how the amendments avoid such references or objections.

37 CFR 1.550. Conduct of ex parte reexamination proceedings.

*****

(b) The patent owner in an *ex parte* reexamination proceeding will be given at least thirty days to respond to any Office action. In response to any rejection, such response may include further statements and/or proposed amendments or new claims to place the patent in a condition where all claims, if amended as proposed, would be patentable.

(c) The time for taking any action by a patent owner in an *ex parte* reexamination proceeding will be extended only for sufficient cause and for a reasonable time specified. Any request for such extension must be filed on or before the day on which action by the patent owner is due, but in no case will the mere filing of a request effect any extension. See § 1.304(a) for extensions of time for filing a notice of appeal to the U.S. Court of Appeals for the Federal Circuit or for commencing a civil action.

(d) If the patent owner fails to file a timely and appropriate response to any Office action or any written statement of an interview required under § 1.560(b), the *ex parte* reexamination proceeding will be terminated, and the Commissioner will proceed to issue a certificate under § 1.570 in accordance with the last action of the Office.

(e) If a response by the patent owner is not timely filed in the Office,

(1) The delay in filing such response may be excused if it is shown to the satisfaction of the Commissioner that the delay was unavoidable; a petition to accept an unavoidably delayed response must be filed in compliance with § 1.137(a); or

(2) The response may nevertheless be accepted if the delay was unintentional; a petition to accept an unintentionally delayed response must be filed in compliance with § 1.137(b).

(f) The reexamination requester will be sent copies of Office actions issued during the *ex parte* reexamination proceeding. After filing of a request for *ex parte* reexamination by a third party requester, any document filed by either the patent owner or the third party requester must be served on the other party in the reexamination proceeding in the manner provided by § 1.248. The document must reflect service or the document may be refused consideration by the Office.

(g) The active participation of the *ex parte* reexamination requester ends with the reply pursuant to § 1.535, and no further submissions on behalf of the reexamination requester will be acknowledged or considered. Further, no submissions on behalf of any third parties will be acknowledged or considered unless such submissions are:

(1) in accordance with § 1.510 or § 1.535; or

(2) entered in the patent file prior to the date of the order for *ex parte* reexamination pursuant to § 1.525.

(h) Submissions by third parties, filed after the date of the order for *ex parte* reexamination pursuant to § 1.525, must meet the requirements of and will be treated in accordance with § 1.501(a).

The patent owner may not file papers on behalf of a third party. 37 CFR 1.550(g). If a third party paper accompanies, or is submitted as part of a timely filed response, the response and third party paper are considered to be an improper submission under 37 CFR 1.550(g), and the <u>entire</u> submission shall be returned to the patent owner since the Office will not determine which portion of the submission is the third party paper. The third party paper will not be considered. The decision returning the improper response and the third party paper should provide an appropriate extension of time under 37 CFR 1.550(c) to refile the patent owner response without the third party paper. See MPEP § 2254 and § 2267.

The certificate of mailing and certificate of transmission procedures (37 CFR 1.8), and the "Express Mail" mailing procedure (37 CFR 1.10), may be used to file any response in an existing reexamination proceeding.

The patent owner is required to serve a copy of any response made in the reexamination proceeding on the third party requester. 37 CFR 1.550(f). See MPEP § 2266.03 as to service of patent owner responses to an Office action.

The patent owner will normally be given a period of 2 months to respond to the Office action. An extension of time can be obtained only in accordance with 37 CFR 1.550(c). Note that 37 CFR 1.136 does not apply in reexamination proceedings.

If the patent owner fails to file a timely and appropriate response to any Office action, the reexamination proceeding will be terminated, unless the response is "not fully responsive" as defined in MPEP § 2266.01 or is an "informal submission" as defined in MPEP § 2266.02. After the proceeding is terminated, the Commissioner will proceed to issue a reexamination certificate.

2266.01 Submission Not Fully Responsive to Non-Final Office Action

A response by the patent owner will be considered not fully responsive to a non-final Office action where:

(A) a *bona fide* response to an examiner's non-final action is filed;

(B) before the expiration of the permissible response period;

(C) but through an apparent oversight or inadvertence, some point necessary to a full response has been omitted (i.e., some matter or compliance with some requirement has been omitted).

Where patent owner's amendment or response **prior to final rejection** is not fully responsive to an Office action in a reexamination and meets all of (A) through (C) above, the reexamination proceeding should not be terminated; but, rather, a practice similar to that of 37 CFR 1.135(c) (which is directed to applications) may be followed. The examiner may treat a patent owner submission which is not fully responsive to a non-final Office action by:

(A) waiving the deficiencies (if not serious) in the response and acting on the patent owner submission;

(B) accepting the amendment as a response to the non-final Office action but notifying the patent owner (via a new Office action setting a new time period for response) that the omission must be supplied; or

(C) notifying the patent owner that the response must be completed within the remaining period for response to the non-final Office action (or within any extension pursuant to 37 CFR 1.550(c)) to avoid termination of the proceeding under 37 CFR 1.550(d). This third alternative should only be used in the *very unusual situation* where there is sufficient time remaining in the period for response (including extensions under 37 CFR 1.550(c)), as is discussed below.

Where a patent owner submission responds to the rejections, objections, or requirements in a non-final Office action and is a *bona fide* attempt to advance the reexamination proceeding to final action, but contains a minor deficiency (e.g., fails to treat every rejection, objection, or requirement), the examiner may simply act on the amendment and issue a new (non-final or final) Office action. The new Office action may simply reiterate the rejection, objection, or requirement not addressed by the patent owner submission or otherwise, indicate that such rejection, objection, or requirement is no longer applicable. In the new Office action, the examiner will identify the part of the previous Office action which was not responded to and make it clear what is needed. Obviously, this course of action would not be appropriate in instances in which a patent owner submission contains a serious deficiency (e.g., the patent owner submission does not appear to have been filed in response to the non-final Office action).

In the usual situation, where the period for response has expired or there is insufficient time remaining to take corrective action before the expiration of the period for response, and a patent owner submission is not fully responsive to a non-final Office action, but is a *bona fide* attempt to advance the proceeding to final action, the patent owner should be given a new time period for response. The patent owner must supply the omission within the new time period for response (or any extensions under 37 CFR 1.550(c) thereof) to

avoid termination of the proceeding under 37 CFR 1.550(d). The patent owner may also file a further response as permitted under 37 CFR 1.111. This is analogous to 37 CFR 1.135(c) for an application. Where such a *bona fide* response to a non-final Office action is timely filed, but through an apparent oversight or inadvertence some point necessary to a complete response has been omitted, the examiner, as soon as he or she notes the omission, may issue a new Office action requiring the patent owner to supply the omission within a specified time period, usually 1 month.

Form paragraph 22.14 may be used where a *bona fide* response is not entirely responsive to a non-final Office action.

¶ 22.14 Submission Not Fully Responsive to Non-Final Office Action

The communication filed on **[1]** is not fully responsive to the prior Office action. **[2]**. The response appears to be *bona fide*, but through an apparent oversight or inadvertence, consideration of some matter or compliance with some requirement has been omitted. Patent owner is required to deal with the omission to thereby provide a full response to the prior Office action.

A shortened statutory period for response to this letter is set to expire ONE MONTH, or THIRTY DAYS, whichever is longer, from the mailing date of this letter. If patent owner fails to timely deal with the omission and thereby provide a full response to the prior Office action, the present reexamination proceeding will be terminated. 37 CFR 1.550(d).

Examiner Note:

1. In bracket 2, the examiner should explain the nature of the omitted point necessary to complete the response, i.e., what part of the Office action was not responded to. The examiner should also make it clear what is needed to deal with the omitted point.
2. This paragraph may be used for a patent owner communication that is not completely responsive to the outstanding (i.e., prior) Office action. See MPEP § 2266.01.
3. This practice does not apply where there has been a deliberate omission of some necessary part of a complete response.
4. This paragraph is only used for a response made prior to final rejection. After final rejection, an advisory Office action and Form PTOL 467 should be used, and the patent owner informed of any non-entry of the amendment.

In the very unusual situation where there is sufficient time remaining in the period for response (including extensions under 37 CFR 1.550(c)), the patent owner may simply be notified that the omission must be supplied within the remaining time period for response. This notification should be made, by telephone, and an interview summary record (see MPEP § 713.04) must be completed and entered into the file of the reexamination proceeding to provide a record of such notification. When notification by telephone is not possible, the procedure set forth above should be followed.

The practice of giving the patent owner a time period to supply an omission in a *bona fide* response (which is analogous to that set forth in 37 CFR 1.135(c) for an application) does not apply where there has been a deliberate omission of some necessary part of a complete response; rather, it is applicable **only** when the missing matter or lack of compliance is considered by the examiner as being "inadvertently omitted." Once an inadvertent omission is brought to the attention of the patent owner, the question of inadvertence no longer exists. Therefore, a second Office action giving another new (1 month) time period to supply the omission would not be appropriate. However, if patent owner's response to the notification of the omission raises a different issue of a different inadvertently omitted matter, a second Office action may be given.

This practice authorizes, but does not require, an examiner to give the patent owner a new time period to supply an omission. Thus, where the examiner concludes that the patent owner is attempting to abuse the practice to obtain additional time for filing a response, the practice should not be followed. If time still remains for response, the examiner may telephone the patent owner and inform the patent owner that the response must be completed within the period for response to the non-final Office action or within any extension pursuant to 37 CFR 1.550(c) to avoid termination of the reexamination proceeding.

The practice of giving the patent owner a time period to supply an omission in a *bona fide* response does **not** apply after a final Office action. If a *bona fide* response to an examiner's action is filed **after final rejection** (before the expiration of the permissible response period), but through an apparent oversight or inadvertence, some point necessary to fully respond has been omitted, the examiner should **not** issue (to the patent owner) a notice of failure to fully respond. Rather, an advisory Office action (form PTOL-467) should be issued with an explanation of the omission. The time period set in the final rejection continues to run and is extended by 1 month if the response is the first response after the final rejection

in accordance with the guidelines set forth in MPEP § 2265. See also MPEP § 2272.

Amendments after final rejection are approved for entry only if they place the proceeding in condition for issuance of a reexamination certificate or in better form for appeal. Otherwise, they are not approved for entry. See MPEP § 714.12 and § 714.13. Thus, an amendment after final rejection should be denied entry if some point necessary for a complete response under 37 CFR 1.113 was omitted, even where the omission was through an apparent oversight or inadvertence. Where a submission after final Office action or appeal (e.g., an amendment filed under 37 CFR 1.116) does not place the proceeding in condition for issuance of a reexamination certificate, the period for response continues to run until a response under 37 CFR 1.113 (i.e., a Notice of Appeal or an amendment that places the proceeding in condition for issuance of a reexamination certificate) is filed. The nature of the omission is immaterial. The examiner cannot give the patent owner a time period to supply the omission.

The examiner has the authority to enter the response, withdraw the final Office action, and issue a new Office action, which may be a final Office action, if appropriate, or an action closing prosecution in an otherwise allowable application under *Ex parte Quayle*, 25 USPQ 74, 1935 C.D. 11 (Comm'r Pat. 1935), if appropriate. This course of action is within the discretion of the examiner. However, the examiner should recognize that substantial patent rights will be at issue with no opportunity for the patent owner to refile under 37 CFR 1.53(b) or 1.53(d) in order to continue prosecution nor to file a request for continued examination under 37 CFR 1.114. Thus, where the time has expired for response and the amendment submitted would place the proceeding in condition for issuance of a reexamination certificate except for an omission through apparent oversight or inadvertence, the examiner should follow this course of action.

2266.02 Examiner Issues Notice of Defective Paper in Reexamination

Even if the substance of a submission is complete, the submission can still be defective, i.e., an "informal submission." Defects in the submission can be, for example:

(A) The paper filed does not include proof of service;

(B) The paper filed is unsigned;

(C) The paper filed is signed by a person who is not of record;

(D) The amendment filed by the patent owner does not comply with 37 CFR 1.530(d)-(j).

Where a submission made **prior to final rejection** is defective (informal), form PTOL-475 is used to provide notification of the defects present in the submission. In many cases, it is only necessary to check the appropriate box on the form and fill in the blanks. However, if one of the entries on form PTOL-475 needs further clarification (such as the specifics of why the amendment does not comply with 37 CFR 1.530(d)-(j)), the additional information should be set forth on a separate sheet of paper which is then attached to the form.

The defects identified above as (A) through (D) are specifically included in form PTOL-475. If the submission contains a defect other than those specifically included on the form, the "other" box on the form is to be checked and the defect explained in the space provided for the explanation. For example, a response might be presented on easily erasable paper, and thus, a new submission would be needed.

A 1-month time period will be set in form PTOL-475 for correction of the defect(s). Extension of time to correct the defect(s) may be requested under 37 CFR 1.550(c).

If a defective (informal) response to an examiner's action is filed **after final rejection** (before the expiration of the permissible response period), the examiner should **not** issue a form PTOL-475 notification to the patent owner. Rather, an advisory Office action (form PTOL-467) should be issued with an explanation of the defect (informality). The time period set in the final rejection continues to run and is extended by 1 month if the response is the first response after the final rejection in accordance with the guidelines set forth in MPEP § 2265. See also MPEP § 2272.

2266.03 Service of Papers

37 CFR 1.510. Request for ex parte reexamination.

*****

(b) Any request for reexamination must include the following parts:

*****

(5) A certification that a copy of the request filed by a person other than the patent owner has been served in its entirety on the patent owner at the address as provided for in § 1.33(c). The name and address of the party served must be indicated. If service was not possible, a duplicate copy must be supplied to the Office

*****

37 CFR 1.550. Conduct of ex parte reexamination proceedings.

*****

(f) The reexamination requester will be sent copies of Office actions issued during the *ex parte* reexamination proceeding. After filing of a request for *ex parte* reexamination by a third party requester, any document filed by either the patent owner or the third party requester must be served on the other party in the reexamination proceeding in the manner provided by § 1.248. The document must reflect service or the document may be refused consideration by the Office.

(g) The active participation of the *ex parte* reexamination requester ends with the reply pursuant to § 1.535, and no further submissions on behalf of the reexamination requester will be acknowledged or considered. Further, no submissions on behalf of any third parties will be acknowledged or considered unless such submissions are:

(1) in accordance with § 1.510 or § 1.535; or

(2) entered in the patent file prior to the date of the order for *ex parte* reexamination pursuant to § 1.525.

(h) Submissions by third parties, filed after the date of the order for *ex parte* reexamination pursuant to § 1.525, must meet the requirements of and will be treated in accordance with § 1.501(a).

Any paper filed, i.e., any submission made, in a third party requested reexamination by either the patent owner or the third party requester, must be served on every other party in the reexamination proceeding.

As proof of service, the party submitting the paper to the Office must attach a certificate of service to the paper. It is required that the name and address of the party served, and the method of service be set forth in the certificate of service. Further, a copy of the certificate of service must be attached with the copy of the paper that is served on the other party.

Papers filed in which no proof of service is included (where proof of service is required) may be denied consideration. Where no proof of service is included, the reexamination clerk should immediately contact the party making the submission by telephone to see whether the indication of proof of service was inadvertently omitted from the submission but there was actual service.

If service was in fact made, the party making the submission should be advised to submit a supplemental paper indicating the manner and date of service. The reexamination clerk should enter the submission for consideration, and annotate the submission with:

"Service confirmed by [name of person] on [date]"

If no service was made, or the party making the submission cannot be contacted, the submission is placed in the reexamination file and normally is not considered. The reexamination clerk should enter the submission on the contents of the file wrapper and place an "(N/E)" next to it. The "(N/E)" can be crossed through if the appropriate service is later made. The submission itself shall be annotated with "no service," which also can be crossed through if the appropriate service is later made.

If the party making the submission cannot be contacted, a Notice of Defective Paper (PTOL-475), giving 1 month to complete the paper, with a supplemental paper indicating the manner and date of service, will be mailed to the party.

If it is known that service of a submission was not made, notice of the requirement for service of copy is given (to the party that made the submission), and a 1-month period is set. Form paragraph 22.15 may be used to give notice.

¶ 22.15 Lack of Service - 37 CFR 1.550(e)

The submission filed on **[1]** is defective because it appears that the submission was not served on the **[2]**. After the filing of a request for reexamination by a third party requester, any document filed by either the patent owner or the third party requester must be served on the other party in the reexamination proceeding in the manner provided in 37 CFR 1.248. See 37 CFR 1.550(f).

It is required that service of the submission be made, and a certificate of service be provided to the Office within a shortened statutory period of ONE MONTH or THIRTY DAYS, whichever is longer, from the mailing date of this letter. If service of the submission is not timely made, the submission may be denied consideration.

Examiner Note:

1. This paragraph may be used where a submission to the Office was not served as required in a third party requester reexamination proceeding.
2. In bracket 2, insert --patent owner-- or --third party requester--, whichever is appropriate.

The cover sheet to be used for mailing the notice will be form PTOL-473.

The failure of a party to serve the submission in response to the notice will have the following consequences:

(A) For a patent owner statement or a third party reply, the submission may be refused consideration by the Office. Where consideration is refused, the submission will not be addressed in the reexamination proceeding other than to inform parties of the lack of consideration thereof;

(B) For a patent owner response to an Office action, the response may be refused consideration by the Office. Where consideration of a response is refused, the proceeding will be terminated in accordance with 37 CFR 1.550(d), unless the patent owner has otherwise completely responded to the Office action.

See MPEP § 2220 as to the initial third party request.

See MPEP § 2249 as to the patent owner statement.

See MPEP § 2251 as to third party reply.

See MPEP § 2266 as to patent owner responses to an Office action.

2267 Handling of Inappropriate or Untimely Filed Papers

The applicable regulations (37 CFR 1.501(a), 1.550(e)) provide that certain types of correspondence will not be considered or acknowledged unless timely received. In every case, a decision is required as to the type of paper and whether it is timely.

The return of inappropriate submissions complies with the regulations that certain papers will not be considered and also reduces the amount of paper which would ultimately have to be stored with the patent file.

DISPOSITION OF PAPERS

Where papers are filed during reexamination proceedings which are inappropriate because of some defect, such papers will either be returned to the sender or forwarded to one of three files, the "Reexamination File," the "Patent File," or the "Storage File." Any papers returned to the sender from a Technology Center (TC) must be accompanied by a letter indicating signature and approval of the TC Director.

The "Reexamination File" and the "Patent File" will remain together in a central storage area prior to the examiner taking up the case for a determination on whether to reexamine. After the files have been forwarded to the examiner for the determination, the "Patent File" will be maintained in the assigned examiner' s room until the reexamination proceeding is terminated.

The "Storage Files" will be maintained separate and apart from the other two files at a location selected by the TC Director. For example, the TC Director may want to locate the "Storage File" in a central area in the TC as with the reexamination clerk or in his or her room.

TYPES OF PAPERS RETURNED WITH COMMISSIONER'S OR TC DIRECTOR'S APPROVAL REQUIRED

Filed by Owner

A. Premature Response by Owner-

§ 1.530(a), § 1.540

Where the patent owner is NOT the requester, any response or amendment filed by owner prior to an order to reexamine is premature and will be returned and will not be considered.

§ 1.550(g)

B. Paper Submitted on Behalf of Third Party -

Submission filed on behalf of a third party will be returned and will not be considered. Where third party paper is submitted as part of a patent owner response, see MPEP § 2254 and § 2266.

Filed by Requester

A. No Statement Filed by Owner -

§ 1.535

If a patent owner fails to file a statement within the prescribed limit, any reply by the requester is inappropriate and will be returned and will not be considered.

B. Late Response by Requester -

§ 1.535, § 1.540

Any response subsequent to 2 months from the date of service of the patent owner's statement will be returned and will not be considered.

C. Additional Response by Requester-

§ 1.550(g)

The active participation of the reexamination requester ends with the reply pursuant to § 1.535. Any further submission on behalf of requester will be returned and will not be considered.

Filed by Third Party

§ 1.501, § 1.565(a)

Unless a paper submitted by a third party raises only issues appropriate under 37 CFR 1.501, or consists solely of a prior decision on the patent by another forum, e.g., a court (see MPEP § 2207, § 2282, and § 2286), it will be returned to an identified third party or destroyed if the submitter is unidentified.

TYPES OF DEFECTIVE PAPERS TO BE LOCATED IN THE "REEXAMINATION FILE"

Filed by Owner	A. Unsigned Papers -
§ 1.33	Papers filed by owner which are unsigned or signed by less than all of the owners (no attorney of record or acting in representative capacity).
	B. No Proof of Service -
§ 1.248	Papers filed by the patent owner in which no proof of service on requester is included and proof of service is required may be denied consideration.
	C. Untimely Papers -
§ 1.530(b), § 1.540	Where owner has filed a paper which is untimely, that is, it was filed after the period set for response, the paper will not be considered.
Filed by Requester	A. Unsigned Papers -
	Papers filed by requester which are unsigned will not be considered.
	B. No Proof of Service -
§ 1.510(b)(5) § 1.33, § 1.248	Papers filed by requester in which no proof of service on owner is included and where proof of service is required may be denied consideration.

PAPERS LOCATED IN THE "STORAGE FILE"

§ 1.501	Citations by Third Parties
§ 1.550(h)	Submissions by third parties based solely on prior art patents or publications filed after the date of the order to reexamine are not entered into the patent file but delayed until the reexamination proceedings have been terminated.

Proper timely filed citations by third parties (i.e., filed prior to the order) are placed in the "Patent File."

2268 Petition for Entry of Late Papers

35 U.S.C. 41. Patent fees; patent and trademark search systems.

(a) The Director shall charge the following fees:

*****

(7) On filing each petition for the revival of an unintentionally abandoned application for a patent, for the unintentionally delayed payment of the fee for issuing each patent, or for an unintentionally delayed response by the patent owner in any reexamination proceeding, $1,210, unless the petition is filed under section 133 or 151 of this title, in which case the fee shall be $110.

*****

35 U.S.C. 133. Time for prosecuting application.

Upon failure of the applicant to prosecute the application within six months after any action therein, of which notice has been given or mailed to the applicant, or within such shorter time, not less than thirty days, as fixed by the Director in such action, the application shall be regarded as abandoned by the parties thereto, unless it be shown to the satisfaction of the Director that such delay was unavoidable.

37 CFR 1.137. Revival of abandoned application, terminated reexamination proceeding, or lapsed patent.

(a) *Unavoidable.* If the delay in reply by applicant or patent owner was unavoidable, a petition may be filed pursuant to this paragraph to revive an abandoned application, a reexamination proceeding terminated under §§ 1.550(d) or 1.957(b) or (c), or a lapsed patent. A grantable petition pursuant to this paragraph must be accompanied by:

(1) The reply required to the outstanding Office action or notice, unless previously filed;

(2) The petition fee as set forth in § 1.17(l);

(3) A showing to the satisfaction of the Commissioner that the entire delay in filing the required reply from the due date

for the reply until the filing of a grantable petition pursuant to this paragraph was unavoidable; and

(4) Any terminal disclaimer (and fee as set forth in § 1.20(d)) required pursuant to paragraph (d) of this section.

(b) *Unintentional.* If the delay in reply by applicant or patent owner was unintentional, a petition may be filed pursuant to this paragraph to revive an abandoned application, a reexamination proceeding terminated under §§ 1.550(d) or 1.957(b) or (c), or a lapsed patent. A grantable petition pursuant to this paragraph must be accompanied by:

(1) The reply required to the outstanding Office action or notice, unless previously filed;

(2) The petition fee as set forth in § 1.17(m);

(3) A statement that the entire delay in filing the required reply from the due date for the reply until the filing of a grantable petition pursuant to this paragraph was unintentional. The Commissioner may require additional information where there is a question whether the delay was unintentional; and

(4) Any terminal disclaimer (and fee as set forth in § 1.20(d)) required pursuant to paragraph (d) of this section.

*****

(e) *Request for reconsideration.* Any request for reconsideration or review of a decision refusing to revive an abandoned application, a terminated reexamination proceeding, or lapsed patent upon petition filed pursuant to this section, to be considered timely, must be filed within two months of the decision refusing to revive or within such time as set in the decision. Unless a decision indicates otherwise, this time period may be extended under:

(1) The provisions of § 1.136 for an abandoned application or lapsed patent;

(2) The provisions of § 1.550(c) for a terminated *ex parte* reexamination proceeding filed under § 1.510; or

(3) The provisions of § 1.956 for a terminated *inter partes* reexamination proceeding filed under § 1.913.

*****

Pursuant to 37 CFR 1.550(d), an *ex parte* reexamination proceeding is terminated if the patent owner fails to file a timely and appropriate response to any Office action or any written statement of an interview required under 37 CFR 1.560(b). An *ex parte* reexamination proceeding terminated under 37 CFR 1.550(d) can be revived if the delay in response by the patent owner (or the failure to timely file the interview statement) was unavoidable in accordance with 37 CFR 1.137(a), or unintentional in accordance with 37 CFR 1.137(b).

The failure to timely file a statement pursuant to 37 CFR 1.530 or a reply pursuant to 37 CFR 1.535, however, would not (under ordinary circumstances) constitute adequate basis to justify a showing of unavoidable/unintentional delay regardless of the reasons for the failure, since no substantive rights are lost by the failure to file these documents.

All petitions in reexamination proceedings to accept late papers and to revive the proceedings will be decided in the Office of Patent Legal Administration.

PETITION BASED ON UNAVOIDABLE DELAY

The unavoidable delay provisions of 35 U.S.C. 133 are imported into, and are applicable to, *ex parte* reexamination proceedings by 35 U.S.C. 305. See *In re Katrapat*, 6 USPQ2d 1863 (Comm' r Pat. 1988). Accordingly, the Office will consider, in appropriate circumstances, a petition showing unavoidable delay under 37 CFR 1.137(a) where untimely papers are filed subsequent to the order for reexamination. Any such petition must provide an adequate showing of the cause of unavoidable delay, including the details of the circumstances surrounding the unavoidable delay and evidence to support the showing. Additionally, the petition must be accompanied by the petition fee set forth in 37 CFR 1.17(l) and a proposed response to continue prosecution (unless it has been previously filed).

PETITION BASED ON UNINTENTIONAL DELAY

The unintentional delay fee provisions of 35 U.S.C. 41(a)(7) are imported into, and are applicable to, all *ex parte* reexamination proceedings by section 4605 of the American Inventors Protection Act of 1999. The unintentional delay provisions of 35 U.S.C. 41(a)(7) became effective in reexamination proceedings on November 29, 2000. Accordingly, the Office will consider, in appropriate circumstances, a petition showing unintentional delay under 37 CFR 1.137(b) where untimely papers are filed subsequent to the order for reexamination. Any such petition must provide a verified statement that the delay was unintentional, a proposed response to continue prosecution (unless it has been previously filed), and the petition fee set forth in 37 CFR 1.17(m).

RENEWED PETITION

Reconsideration may be requested of a decision dismissing or denying a petition under 37 CFR 1.137(a) or (b) to revive a terminated reexamination proceeding. The request for reconsideration must be submitted within one (1) month from the mail date of

the decision for which reconsideration is requested. An extension of time may be requested only under 37 CFR 1.550(c); extensions of time under 37 CFR 1.136 are not available in reexamination proceedings. Any reconsideration request which is submitted should include a cover letter entitled "Renewed Petition under 37 CFR 1.137(a)" (for a petition based on unavoidable delay) or "Renewed Petition under 37 CFR 1.137(b)" (for a petition based on unintentional delay).

FURTHER DISCUSSION OF THE PETITION REQUIREMENTS

See also MPEP § 711.03(c), part III, for a detailed discussion of the requirements of petitions filed under 37 CFR 1.137(a) and (b).

2269 Reconsideration

In order to be entitled to reconsideration, the patent owner must respond to the Office action. 37 CFR 1.111(b). The patent owner may respond to such Office action with or without amendment and the patent under reexamination will be reconsidered, and so on repeatedly unless the examiner has indicated that the action is final. See 37 CFR 1.112. Any amendment after the second Office action, which will normally be final as provided for in MPEP § 2271, must ordinarily be restricted to the rejection or to the objection or requirement made.

2270 Clerical Handling

The person designated as the reexamination clerk will handle most of the initial clerical processing of the reexamination file.

Amendments which comply with 37 CFR 1.530(d)-(j) will be entered for purposes of reexamination in the reexamination file wrapper. See MPEP § 2234 and § 2250 for manner of entering amendments.

For entry of amendments in a merged reissue-reexamination proceeding, see MPEP § 2283 and § 2285.

Where an amendment is submitted in proper form and it is otherwise appropriate to enter the amendment, the amendment will be entered for purposes of the reexamination proceeding, even though the amendment does not have legal effect until the certificate is issued. Any "new matter" amendment to the disclosure (35 U.S.C. 132) will be required to be canceled, and claims containing new matter will be rejected under 35 U.S.C. 112. A "new matter" amendment to the drawing is ordinarily not entered. See MPEP § 608.04, § 608.04(a) and (c).

2271 Final Action

Before a final action is in order, a clear issue should be developed between the examiner and the patent owner. To bring the prosecution to a speedy conclusion and at the same time deal justly with the patent owner and the public, the examiner will twice provide the patent owner with such information and references as may be useful in defining the position of the Office as to unpatentability before the action is made final. Initially, the decision ordering reexamination of the patent will contain an identification of the new questions of patentability that the examiner considers to be raised by the prior art considered. In addition, the first Office action will reflect the consideration of any arguments and/or amendments contained in the request, the owner's statement filed pursuant to 37 CFR 1.530, and any reply thereto by the requester, and should fully apply all relevant grounds of rejection to the claims.

The statement which the patent owner may file under 37 CFR 1.530 and the response to the first Office action should completely respond to and/or amend with a view to avoiding all outstanding grounds of rejection.

It is intended that the second Office action in the reexamination proceeding following the decision ordering reexamination will be made final in accordance with the guidelines set forth in MPEP § 706.07(a). The examiner should not prematurely cut off the prosecution with a patent owner who is seeking to define the invention in claims that will offer the patent protection to which the patent owner is entitled. However, both the patent owner and the examiner should recognize that a reexamination proceeding may result in the final cancellation of claims from the patent and that the patent owner does not have the right to renew or continue the proceedings by refiling under 37 CFR 1.53(b) or 1.53(d) or former 37 CFR 1.60 or 1.62, nor by filing a request for continued examination under 37 CFR 1.114. Complete and thorough actions by the examiner coupled with complete responses by the patent owner, including early presentation of evidence under 37 CFR 1.131 or 1.132, will go far in avoiding such problems and reaching a desir-

able early termination of the reexamination proceeding.

After an examiner has determined that the reexamination proceeding is ready for final rejection, the examiner will formulate a draft preliminary decision to issue a final rejection, the preliminary decision setting forth which claims to reject, the grounds of rejection, which claims to allow/confirm and reasons for allowance/confirmation. The examiner will then inform his/her Supervisory Patent Examiner (SPE) of his/her intent to issue the final rejection. The SPE will convene a patentability review conference, and the conference members will review the patentability of the claim(s) pursuant to MPEP § 2271.01. If the conference confirms the examiner's preliminary decision to reject and/or allow the claims, the Office action (Notice of Intent to Issue a Reexamination Certificate (NIRC) or final rejection) shall be issued and signed by the examiner, with the two other conferees initialing the action (as "conferee") to indicate their presence in the conference. If the conference does not confirm the examiner's preliminary decision, the proposed final rejection will not be issued by the examiner; but rather, the examiner will issue the appropriate Office action reflecting the decision of the conference.

In making the final rejection, all outstanding grounds of rejection of record should be carefully reviewed and any grounds or rejection relied on should be reiterated. The grounds of rejection must (in the final rejection) be clearly developed to such an extent that the patent owner may readily judge the advisability of an appeal. However, where a single previous Office action contains a complete statement of a ground of rejection, the final rejection may refer to such a statement and also should include a rebuttal of any arguments raised in the patent owner's response. The final rejection letter should conclude with one of form paragraphs 22.09 or 22.10.

¶ 22.09 Reexamination - Action Is Final

THIS ACTION IS MADE FINAL.

A shortened statutory period for response to this action is set to expire **[1]** from the mailing date of this action.

Extensions of time under 37 CFR 1.136(a) do not apply in reexamination proceedings. The provisions of 37 CFR 1.136 apply only to "an applicant" and not to parties in a reexamination proceeding. Further, in 35 U.S.C. 305 and in 37 CFR 1.550(a), it is required that reexamination proceedings "will be conducted with special dispatch within the Office."

Extensions of time in reexamination proceedings are provided for in 37 CFR 1.550(c). A request for extension of time must be filed on or before the day on which a response to this action is due. The mere filing of a request will not effect any extension of time. An extension of time will be granted only for sufficient cause, and for a reasonable time specified.

The filing of a timely first response to this final rejection will be construed as including a request to extend the shortened statutory period for an additional month, which will be granted even if previous extensions have been granted. In no event, however, will the statutory period for response expire later than SIX MONTHS from the mailing date of the final action. See MPEP § 2265.

Examiner Note:

1. This form paragraph may be used only in reexamination proceedings.
2. In bracket 1, insert the appropriate period for response, which is normally TWO (2) MONTHS. In court sanctioned or stayed litigation situations a ONE (1) MONTH period should be set.

¶ 22.10 Reexamination - Action Is Final, Necessitated by Amendment

Patent owner's amendment filed **[1]** necessitated the new grounds of rejection presented in this Office action. Accordingly, **THIS ACTION IS MADE FINAL.** See MPEP § 706.07(a).

A shortened statutory period for response to this action is set to expire **[2]** from the mailing date of this action.

Extensions of time under 37 CFR 1.136(a) do not apply in reexamination proceedings. The provisions of 37 CFR 1.136 apply only to "an applicant" and not to parties in a reexamination proceeding. Further, in 35 U.S.C. 305 and in 37 CFR 1.550(a), it is required that reexamination proceedings "will be conducted with special dispatch within the Office."

Extensions of time in reexamination proceedings are provided for in 37 CFR 1.550(c). A request for extension of time must be filed on or before the day on which a response to this action is due. The mere filing of a request will not effect any extension of time. An extension of time will be granted only for sufficient cause, and for a reasonable time specified.

The filing of a timely first response to this final rejection will be construed as including a request to extend the shortened statutory period for an additional month, which will be granted even if previous extensions have been granted. In no event, however, will the statutory period for response expire later than SIX MONTHS from the mailing date of the final action. See MPEP § 2265.

Examiner Note:

1. This form paragraph may be used only in reexamination proceedings.
2. In bracket 1, insert filing date of amendment.
3. In bracket 2, insert the appropriate period for response, which is normally TWO (2) MONTHS. In court sanctioned or stayed litigation situations a ONE (1) MONTH period should be set.

As with all other Office correspondence on the merits in a reexamination proceeding, the final Office action must be signed by a primary examiner.

2271.01 Patentability Review Conferences

A "patentability review conference" will be convened at two stages of the examination in an *ex parte* reexamination proceeding:

(A) A patentability review conference must be convened just prior to issuing a final rejection; and

(B) A patentability review conference must be convened just prior to issuing a Notice of Intent to Issue a Reexamination Certificate (NIRC), other than in the exceptions set forth in this section.

In the patentability review conference, the examiner's preliminary decision to reject and/or allow the claims in the reexamination proceeding will be reviewed, prior to the issuance of the Office action (NIRC or final rejection).

MAKE-UP OF THE PATENTABILITY REVIEW CONFERENCE

The patentability review conference will consist of three members, one of whom may be the supervisory patent examiner (SPE). The first member will be the examiner in charge of the proceeding. The SPE will select the other two members, who will be examiner-conferees. The examiner-conferees will be primary examiners, or examiners who are knowledgeable in the technology of the invention claimed in the patent being reexamined and/or who are experienced in reexamination practice. The majority of those present at the conference will be examiners who were not involved in the examination or issuance of the patent. An "original" examiner (see MPEP § 2236) should be chosen as a conferee only if that examiner is the most knowledgeable in the art, or there is some other specific and justifiable reason to choose an original examiner as a participant in the conference.

The patentability review conference will be similar to the appeal conference carried out prior to the issuance of an examiner's answer following the filing of a notice of appeal and the appeal brief. See MPEP § 1208. A patentability review conference **must** be held in each instance where a final rejection is about to be issued in a reexamination proceeding. A patentability review conference **must** also be held in each instance where a NIRC is about to be issued, unless the NIRC is being issued: (A) following and consistent with a decision by the Board of Patent Appeals and Interferences (or court) on the merits of the proceeding; or (B) as a consequence of the patent owner's failure to respond or take other action where such a response or action is necessary to maintain pendency of the proceeding and, as a result of which failure to respond, all of the claims will be canceled. When the patentability review conference results in the issuance of a final rejection or a NIRC, the two conferees will place their initials, followed by the word "conferee," below the signature of the examiner. The signature of the examiner and initials of the conferees on the resulting Office action will reflect that the patentability review conference has been conducted.

PATENTABILITY REVIEW CONFERENCE PROCESS

The examiner must inform his/her SPE of his/her intent to issue a final rejection or NIRC. The SPE will then convene a patentability review conference and the conference members will review the patentability of the claim(s). If the conference confirms the examiner's preliminary decision to reject and/or allow the claims, the Office action (NIRC or final rejection) shall be issued and signed by the examiner, with the two other conferees initialing the action (as "conferee") to indicate their participation in the conference. Both conferees will initial, even though one of them may have dissented from the 3-party conference decision as to the patentabiliy of claims. If the conference does not confirm the examiner's preliminary decision, the proposed NIRC or final rejection will not be issued by the examiner; rather, the examiner will issue an appropriate Office action reflecting the decision of the conference.

Where the examiner in charge of the proceeding is not in agreement with the conference decision, the SPE will generally assign the proceeding to another examiner, preferably to one of the other two conference members.

WHAT THE CONFERENCE IS TO ACCOMPLISH

Each conference will provide a forum to consider all issues of patentability as well as procedural issues having an impact on patentability. Review of the patentability of the claims by more than one primary examiner should diminish the perception that the patent owner can disproportionately influence the examiner in charge of the proceeding. The conferences will also provide greater assurance that all matters will be addressed appropriately. All issues in the proceeding will be viewed from the perspectives of three examiners. What the examiner in charge of the proceeding might have missed, the other two conference members would likely detect. The conference will provide for a comprehensive discussion of, and finding for, each issue.

CONSEQUENCES OF FAILURE TO HOLD CONFERENCE

Should the examiner issue a final rejection or NIRC without holding a patentability review conference, the patent owner or the third party requester who wishes to object must promptly file a paper alerting the Office of this fact. Any challenge of the failure to hold a patentability review conference must be made within two months of the Office action issued, or the challenge will not be considered. In such cases, whether to convene a patentability review conference to reconsider the examiner's decision will be addressed on a case-by-case basis. In no event will the failure to hold a review conference, by itself, be grounds for vacating any Office decision(s) or action(s) and "restarting" the reexamination proceeding.

2272 After Final Practice

It is intended that prosecution before the examiner in a reexamination proceeding will be concluded with the final action. Once a final rejection that is not premature has been entered in a reexamination proceeding, the patent owner no longer has any right to unrestricted further prosecution. Consideration of amendments submitted after final rejection will be governed by the strict standards of 37 CFR 1.116. Both the examiner and the patent owner should recognize that substantial patent rights will be at issue with no opportunity for the patent owner to refile under 37 CFR 1.53(b), 1.53(d), former 37 CFR 1.60, or former 37 CFR 1.62, and with no opportunity to file a request for continued examination under 37 CFR 1.114. Accordingly, both the examiner and the patent owner should identify and develop all issues prior to the final Office action, including the presentation of evidence under 37 CFR 1.131 and 1.132.

FINAL REJECTION — TIME FOR RESPONSE

The statutory period for response to a final rejection in a reexamination proceeding will normally be two (2) months. If a response to the final rejection is filed, the time period set in the final rejection continues to run. The time period is automatically extended by 1 month (in accordance with the guidelines set forth in MPEP § 2265) if the response is the first response after the final rejection. Any advisory Office action (form PTOL-467) issued in reply to patent owner's response after final rejection will inform the patent owner of the automatic 1 month extension of time. It should be noted that the filing of any timely first response to a final rejection (even an informal response or even a response that is not signed) will automatically result in the extension of the shortened statutory period for an additional month. Note further that the patent owner is entitled to know the examiner's ruling on a timely response filed after final rejection before being required to file a notice of appeal. Notification of the examiner's ruling should reach the patent owner with sufficient time for the patent owner to consider the ruling and act on it. Accordingly, the period for response to the final rejection should be appropriately extended in the examiner's advisory action. See *Theodore Groz & Sohne & Ernst Bechert Nadelfabrik KG v.Quigg*, 10 USPQ2d 1787 (D.D.C. 1988). The period for response may not, however, be extended to run past 6 months from the date of the final rejection.

ACTION BY EXAMINER

It should be kept in mind that a patent owner cannot, as a matter of right, amend any finally rejected claims, add new claims after a final rejection, or reinstate previously canceled claims. A showing under 37 CFR 1.116(b) is required and will be evaluated by the examiner for all proposed amendments after final rejection except where an amendment merely cancels

claims, adopts examiner's suggestions, removes issues for appeal, or in some other way requires only a cursory review by the examiner. An amendment filed at any time after final rejection but before an appeal brief is filed, may be entered upon or after filing of an appeal provided the total effect of the amendment is to (A) remove issues for appeal, and/or (B) adopt examiner suggestions.

The first proposed amendment after final action in a reexamination proceeding will be given sufficient consideration to determine whether it places all the claims in condition where they are patentable and/or whether the issues on appeal are reduced or simplified. Unless the proposed amendment is entered in its entirety, the examiner will briefly explain the reasons for not entering a proposed amendment. For example, if the claims as amended present a new issue requiring further consideration or search, the new issue should be identified and a brief explanation provided as to why a new search or consideration is necessary. The patent owner should be notified if certain portions of the amendment would be entered if a separate paper was filed containing only such amendment.

Any second or subsequent amendment after final will be considered only to the extent that it removes issues for appeal or puts a claim in obvious patentable condition.

Since patents undergoing reexamination cannot become abandoned and cannot be refiled, and since the holding of claims unpatentable and canceled in a certificate is absolutely final, it is appropriate that the examiner consider the feasibility of entering amendments touching the merits after final rejection or after appeal has been taken, where there is a showing why the amendments are necessary and a suitable reason is given why they were not earlier presented.

The practice of giving the patent owner a time period to supply an omission in a *bona fide* response (as set forth in MPEP § 2266.01) does **not** apply after a final Office action. If a *bona fide* response to an examiner's action is filed **after final rejection** (before the expiration of the permissible response period), but through an apparent oversight or inadvertence, some point necessary to fully respond has been omitted, the examiner should **not** issue (to the patent owner) a notice of failure to fully respond. Rather, an advisory Office action (form PTOL-467) should be issued with an explanation of the omission.

Likewise, the practice of notifying the patent owner of the defects present in a submission via form PTOL-475 and setting a time period for correction of the defect(s) (as set forth in MPEP § 2266.02) does **not** apply after a final Office action. If a defective (informal) response to an examiner's action is filed **after final rejection** (before the expiration of the permissible response period), the examiner should **not** issue a form PTOL-475 notification to the patent owner. Rather, an advisory Office action (form PTOL-467) should be issued with an explanation of the defect (informality).

2273 Appeal in Reexamination

35 U.S.C. 306. Appeal.

The patent owner involved in a reexamination proceeding under this chapter may appeal under the provisions of section 134 of this title, and may seek court review under the provisions of sections 141 to 145 of this title, with respect to any decision adverse to the patentability of any original or proposed amended or new claim of the patent.

A patent owner who is dissatisfied with the primary examiner's decision to reject claims in an *ex parte* reexamination proceeding may appeal to the Board of Patent Appeals and Interferences for review of the examiner's rejection by filing a notice of appeal within the required time. A third party requester may not appeal, and may not participate in the patent owner's appeal.

In an *ex parte* reexamination of a patent that issued from an original application filed <u>before</u> November 29, 1999, the patent owner may appeal to the Board either (A) after final rejection of the claims, or (B) after the second rejection of the claims. This is based on the version of 35 U.S.C. 134 in existence prior to the amendment of the reexamination statute on November 29, 1999, by Public Law 106-113. This "prior version" of 35 U.S.C. 134 applies to appeals in reexamination of patents issuing from original applications filed in the U.S. before November 29, 1999.

In an *ex parte* reexamination of a patent that issued from an original application filed <u>on or after</u> November 29, 1999, the patent owner may appeal to the Board <u>only</u> after the final rejection of the claims. This is based on the current version of 35 U.S.C. 134 as amended by Public Law 106-113. This "current version" of 35 U.S.C. 134 applies to appeals in reexamination of patents issuing from original applications filed in the U.S. on or after November 29, 1999.

The notice of appeal need not be signed by the patent owner or his or her attorney or agent. See 37 CFR 1.191(b). The fee required by 37 CFR 1.17(b) must accompany the notice of appeal. See 37 CFR 1.191(a).

The period for filing the notice of appeal is the period set for response in the last Office action which is normally 2 months. The timely filing of a first response to a final rejection having a shortened statutory period for response is construed as including a request to extend the period for response an additional month, even if an extension has been previously granted, as long as the period for response does not exceed 6 months from the date of the final rejection. The normal *ex parte* appeal procedures set forth at 37 CFR 1.191 through 37 CFR 1.198 apply in *ex parte* reexamination, except as pointed out in this Chapter. A third party requester may not appeal or otherwise participate in the appeal.

The reexamination statute does not provide for review of a patentability decision favoring the patentee. *Greenwood v. Seiko Instruments*, 8 USPQ2d 1455 (D.D.C. 1988).

See MPEP § 1205 for a discussion of the requirements for a proper appeal. However, note that in the unusual circumstances where an appeal is defective (e.g., no proof of service is included, it was filed for the wrong proceeding), patent owner should **not** be advised by the examiner to obtain an extension of time under 37 CFR 1.136(a), because an extension of time under 37 CFR 1.136 cannot be obtained in a reexamination proceeding.

Where a notice of appeal is defective, the patent owner will be so notified. Form PTOL-497 will be used to provide the notification. A 1-month period will be provided for the patent owner to cure the defect(s) in the appeal.

If the patent owner does not timely file a notice of appeal and/or does not timely file the appropriate appeal fee, the patent owner will be notified that the appeal is dismissed. Form PTOL-497 will be used to provide the notification. The reexamination proceeding is then terminated, and a Notice of Intent to Issue Reexamination Certificate (NIRC) will subsequently be issued indicating the status of the claims at the time of final rejection (or after the second rejection of the claims, where an appeal was taken from that action without waiting for a final rejection). See MPEP § 2287.

2274 Appeal Brief

AMENDMENT

Where the appeal brief is not filed, but within the period allowed for filing the brief an amendment is presented which places the claims of the patent under reexamination in a patentable condition, the amendment may be entered. Amendments should not be included in the appeal brief.

As to separate amendments, i.e., amendments not included with the appeal brief, filed with or after the appeal, see MPEP § 1207.

TIME FOR FILING APPEAL BRIEF

The time for filing the appeal brief is 2 months from the date of the appeal or alternatively, within the time allowed for response to the action appealed from, if such time is later.

EXTENSION OF TIME FOR FILING APPEAL BRIEF

In the event that the patent owner finds that he or she is unable to file a brief within the time allowed by the rules, he or she may file a petition without any fee, to the Technology Center (TC), requesting additional time (usually 1 month), and give reasons for the request. The petition should be filed in duplicate and contain the address to which the response is to be sent. If sufficient cause is shown and the petition is filed prior to the expiration of the period sought to be extended (37 CFR 1.550(c)), the TC Director is authorized to grant the extension for up to 1 month. Requests for extensions of time for more than 1 month will also be decided by the TC Director, but will not be granted unless extraordinary circumstances are involved; e.g., death or incapacitation of the patent owner. The time extended is added to the last calendar day of the original period, as opposed to being added to the day it would have been due when said last day is a Saturday, Sunday, or Federal holiday.

FAILURE TO TIMELY FILE APPEAL BRIEF

Failure to file the brief and/or the appeal fee within the permissible time will result in dismissal of the appeal. Form PTOL-497 is used to notify the patent

owner that the appeal is dismissed. The reexamination proceeding is then terminated, and a Notice of Intent to Issue Reexamination Certificate (NIRC) (see MPEP § 2287) will subsequently be issued indicating the status of the claims at the time of appeal.

REQUIREMENTS FOR THE APPEAL BRIEF

A fee as set forth in 37 CFR 1.17(c) is required when the appeal brief is filed for the first time in a particular reexamination proceeding, 35 U.S.C. 41(a). 37 CFR 1.192 provides that the appellant shall file a brief of the authorities and arguments on which he or she will rely to maintain his or her appeal, including a concise explanation of the invention which must refer to the specification by page and line number, and to the drawing, if any, by reference characters, and a copy of the claims involved. 37 CFR 1.192(a) requires the submission of three copies of the appeal brief. In addition, where the request for reexamination was filed by a third party requester, a copy of the brief must be served on that third party requester.

In the case of a merged proceeding (see MPEP § 2283 and § 2285), one original and two copies of the brief should be provided for each reexamination and reissue in the merged proceeding. In addition, a copy of the brief must be served on any third party requesters who are part of the merged proceeding.

For the sake of convenience, the copy of the claims involved should be double spaced and should start on a new page. Note that claims on appeal in reexamination proceedings should include all underlining and bracketing necessary to reflect the changes made to the original patent claims throughout the prosecution of the reexamination. In addition, any new claims added in the reexamination should be completely underlined. This represents a departure from the procedure set forth in MPEP § 1206 for applications.

The brief, as well as every other paper relating to an appeal, should indicate the number of the TC to which the reexamination is assigned and the reexamination control number. When the brief is received, it is forwarded to the TC where it is entered in the file and referred to the examiner.

Patent owners are reminded that their briefs in appeal cases must be responsive to every ground of rejection stated by the examiner. A reply brief, if filed, shall be entered, except that amendments or affidavits or other evidence are subject to 37 CFR 1.116 and 1.195. See 37 CFR 1.193(b)(1).

It is essential that the Board of Patent Appeals and Interferences should be provided with a brief fully stating the position of the appellant with respect to each issue involved in the appeal so that no search of the record is required in order to determine that position. The fact that appellant may consider a ground to be clearly improper does not justify a failure on the part of the appellant to point out to the Board the reasons for that view in the brief.

See MPEP § 1206 for further discussion of the requirements for an appeal brief.

DEFECTIVE APPEAL BRIEF

Where an appeal brief is defective, the examiner will notify the patent owner that the brief is defective, using part 4 of form PTOL-497. A 1-month period is provided for the patent owner to cure the defect(s). The nature of the defect(s) is to be explained by the examiner in an attachment to form PTOL-497. An example of this is where an appellant patent owner fails to respond by way of brief to any ground of rejection, and it appears that the failure is inadvertent. In such a case, appellant should be notified by the examiner that he or she is given 1 month to correct the defect by filing a supplemental brief.

It is important for the examiner to identify any defects in the brief and give the patent owner 1 month in which to cure the defects. Where this procedure has not been followed, the Board of Patent Appeals and Interferences (Board) should remand the reexamination file to the examiner for compliance (i.e., for corrective action).

When the record clearly indicates *intentional failure* to respond by brief, to any ground of rejection, for example, the examiner should inform the Board of this fact in his or her answer and merely specify the claim(s) affected. Where the failure to respond by brief appears to be intentional, the Board may dismiss the appeal as to the claims involved. Oral argument at the hearing will not remedy such deficiency of a brief.

The mere filing of any paper whatsoever entitled as a brief cannot necessarily be considered as compliance with 37 CFR 1.192. The rule requires that the brief must set forth the authorities and arguments relied on, and to the extent that it fails to do so with respect to any ground of rejection, the appeal as to

that ground may be dismissed. A distinction must be made between the lack of any argument and the presentation of arguments that carry no conviction. In the former case dismissal is in order, while in the latter case a decision on the merits is made, although it may well be merely an affirmance based on the grounds relied on by the examiner.

Appellant must traverse *every* ground of rejection set forth in the final rejection. Oral argument at the hearing will not remedy a deficiency of failure to traverse a ground of rejection in the brief. Ignoring or acquiescing in any rejection, even one based upon formal matters which could be cured by subsequent amendment, will invite a dismissal of the appeal as to the claims subject to the rejection.

The reexamination proceedings are considered terminated as of the date of the dismissal of the appeal. After the appeal is dismissed, the examiner will proceed to issue a Notice of Intent to Issue Reexamination Certificate for the proceeding; see MPEP § 2287.

2275 Examiner's Answer

37 CFR 1.193. Examiner's answer and reply brief.

(a)(1) The primary examiner may, within such time as may be directed by the Commissioner, furnish a written statement in answer to appellant's brief including such explanation of the invention claimed and of the references and grounds of rejection as may be necessary, supplying a copy to appellant. If the primary examiner finds that the appeal is not regular in form or does not relate to an appealable action, the primary examiner shall so state.

(2) An examiner's answer must not include a new ground of rejection, but if an amendment under § 1.116 proposes to add or amend one or more claims and appellant was advised that the amendment under § 1.116 would be entered for purposes of appeal and which individual rejection(s) set forth in the action from which the appeal was taken would be used to reject the added or amended claim(s), then the appeal brief must address the rejection(s) of the claim(s) added or amended by the amendment under § 1.116 as appellant was so advised and the examiner's answer may include the rejection(s) of the claim(s) added or amended by the amendment under § 1.116 as appellant was so advised. The filing of an amendment under § 1.116 which is entered for purposes of appeal represents appellant's consent that when so advised any appeal proceed on those claim(s) added or amended by the amendment under § 1.116 subject to any rejection set forth in the action from which the appeal was taken.

(b)(1) Appellant may file a reply brief to an examiner's answer or a supplemental examiner's answer within two months from the date of such examiner's answer or supplemental examiner's answer. See § 1.136(b) for extensions of time for filing a reply brief in a patent application and § 1.550(c) for extensions of time for filing a reply brief in a reexamination proceeding. The primary examiner must either acknowledge receipt and entry of the reply brief or withdraw the final rejection and reopen prosecution to respond to the reply brief. A supplemental examiner's answer is not permitted, unless the application has been remanded by the Board of Patent Appeals and Interferences for such purpose.

(2) Where prosecution is reopened by the primary examiner after an appeal or reply brief has been filed, appellant must exercise one of the following two options to avoid abandonment of the application:

(i) File a reply under § 1.111, if the Office action is not final, or a reply under § 1.113, if the Office action is final; or

(ii) Request reinstatement of the appeal. If reinstatement of the appeal is requested, such request must be accompanied by a supplemental appeal brief, but no new amendments, affidavits (§§ 1.130, 1.131 or 1.132) or other evidence are permitted.

MPEP § 1208 through § 1208.02 relate to preparation of examiner's answers in appeals. The procedures covered in these sections apply to appeals in both patent applications and patents undergoing reexamination proceedings, except as provided for in this Chapter.

Where appellant files a timely reply brief to an examiner's answer or a supplemental examiner's answer, the examiner may either (A) acknowledge receipt and entry of the reply brief, or (B) withdraw the final rejection and reopen prosecution to respond to the reply brief. A supplemental examiner's answer is not permitted, unless the application has been remanded by the Board of Patent Appeals and Interferences for such purposes.

2276 Oral Hearing

If appellant (patent owner) desires an oral hearing, appellant must file a written request for such hearing accompanied by the fee set forth in 37 CFR 1.17(d) within 2 months after the date of the examiner's answer.

Where the appeal involves reexamination proceedings, oral hearings are open to the public as observers unless the appellant (A) requests that the hearing not be open to the public and (B) presents valid reasons for such a request.

MPEP § 1209 relates to oral hearings in appeals in both patent applications and reexamination proceedings.

2277 Board of Patent Appeals and Interferences Decision

MPEP § 1213 through § 1213.03 relate to decisions of the Board of Patent Appeals and Interferences for both applications and reexamination proceedings.

2278 Action Following Decision

MPEP § 1214 through § 1214.07 provide the procedures to be followed after the conclusion of the appeal to the Board of Patent Appeals and Interferences, for both patent applications and reexamination proceedings, except as provided for in this Chapter.

2279 Appeal to Courts

A patent owner not satisfied with the decision of the Board of Patent Appeals and Interferences may seek judicial review.

In an *ex parte* reexamination of a patent that issued from an original application filed before November 29, 1999, the patent owner may appeal the decision of the Board of Patent Appeals and Interferences to either (A) the United States Court of Appeals for the Federal Circuit pursuant to 35 U.S.C. 141, or (B) the United States District Court for the District of Columbia pursuant to 35 U.S.C. 145. This is based on the version of 35 U.S.C. 141 and 35 U.S.C. 145 in existence prior to the amendment of the reexamination statute on November 29, 1999 by Public Law 106-113. This "prior version" of 35 U.S.C. 141 and 35 U.S.C. 145 applies to appeals in reexamination of patents issuing from original applications filed in the U.S. before November 29, 1999.

In an *ex parte* reexamination of a patent that issued from an original application filed on or after November 29, 1999, the patent owner may appeal the decision of the Board of Patent Appeals and Interferences only to the United States Court of Appeals for the Federal Circuit pursuant to 35 U.S.C. 141. This is based on the current version of 35 U.S.C. 141 and 35 U.S.C. 145 as they were amended by Public Law 106-113. This "current version" of 35 U.S.C. 141 and 35 U.S.C. 145 applies to appeals in reexamination of patents issuing from original applications filed in the U.S. on or after November 29, 1999.

A third party may not seek judicial review. *Yuasa Battery v. Comm'r*, 3 USPQ2d 1143 (D.D.C. 1987).

While the reexamination statutory provisions do not provide for participation by any third party requester during any court review, the courts have permitted intervention by a third party requester in appropriate circumstances. See *In re Etter*, 756 F.2d 852, 225 USPQ 1 (Fed. Cir. 1985) and *Read v. Quigg*, 230 USPQ 62 (D.D.C. 1986). See also MPEP § 1216, § 1216.01, and § 1216.02. A third party requester who is permitted to intervene in a civil action has no standing to appeal the court's decision, *Boeing Co. v. Comm'r*, 853 F.2d 878, 7 USPQ2d 1487 (Fed. Cir. 1988).

2280 Information Material to Patentability in Reexamination Proceeding

37 CFR 1.555. Information material to patentability in ex parte reexamination and inter partes reexamination proceedings.

(a) A patent by its very nature is affected with a public interest. The public interest is best served, and the most effective reexamination occurs when, at the time a reexamination proceeding is being conducted, the Office is aware of and evaluates the teachings of all information material to patentability in a reexamination proceeding. Each individual associated with the patent owner in a reexamination proceeding has a duty of candor and good faith in dealing with the Office, which includes a duty to disclose to the Office all information known to that individual to be material to patentability in a reexamination proceeding. The individuals who have a duty to disclose to the Office all information known to them to be material to patentability in a reexamination proceeding are the patent owner, each attorney or agent who represents the patent owner, and every other individual who is substantively involved on behalf of the patent owner in a reexamination proceeding. The duty to disclose the information exists with respect to each claim pending in the reexamination proceeding until the claim is cancelled. Information material to the patentability of a cancelled claim need not be submitted if the information is not material to patentability of any claim remaining under consideration in the reexamination proceeding. The duty to disclose all information known to be material to patentability in a reexamination proceeding is deemed to be satisfied if all information known to be material to patentability of any claim in the patent after issuance of the reexamination certificate was cited by the Office or submitted to the Office in an information disclosure statement. However, the duties of candor, good faith, and disclosure have not been complied with if any fraud on the Office was practiced or attempted or the duty of disclosure was violated through bad faith or intentional misconduct by, or on behalf of, the patent owner in the reexamination proceeding. Any information disclosure statement must be filed with the items listed in § 1.98(a) as applied to individuals associated with the patent owner in a reexamination

proceeding, and should be filed within two months of the date of the order for reexamination, or as soon thereafter as possible.

(b) Under this section, information is material to patentability in a reexamination proceeding when it is not cumulative to information of record or being made of record in the reexamination proceeding, and

(1) It is a patent or printed publication that establishes, by itself or in combination with other patents or printed publications, a *prima facie* case of unpatentability of a claim; or

(2) It refutes, or is inconsistent with, a position the patent owner takes in:

(i) Opposing an argument of unpatentability relied on by the Office, or

(ii) Asserting an argument of patentability.

A *prima facie* case of unpatentability of a claim pending in a reexamination proceeding is established when the information compels a conclusion that a claim is unpatentable under the preponderance of evidence, burden-of-proof standard, giving each term in the claim its broadest reasonable construction consistent with the specification, and before any consideration is given to evidence which may be submitted in an attempt to establish a contrary conclusion of patentability.

(c) The responsibility for compliance with this section rests upon the individuals designated in paragraph (a) of this section and no evaluation will be made by the Office in the reexamination proceeding as to compliance with this section. If questions of compliance with this section are discovered during a reexamination proceeding, they will be noted as unresolved questions in accordance with § 1.552(c).

The duty of disclosure in reexamination proceedings applies to the patent owner; to each attorney or agent who represents the patent owner, and to every other individual who is substantially involved on behalf of the patent owner. That duty is a continuing obligation on all such individuals throughout the proceeding. The continuing obligation during the reexamination proceeding is that any such individual to whom the duty applies who is aware of, or becomes aware of, patents or printed publications which (A) are material to patentability in a reexamination proceeding, and (B) which have not previously been made of record in the patent file, must bring such patents or printed publications to the attention of the Office.

Such individuals are strongly encouraged to file information disclosure statements, preferably in accordance with 37 CFR 1.98, within two months of the date of the order to reexamine, or as soon thereafter as possible, in order to bring the patents or printed publications to the attention of the Office. An information disclosure statement filed under 37 CFR 1.555 by the patent owner after the order for reexamination and before the first action on the merits may be submitted as part of the statement under 37 CFR 1.530, or it may be filed as a separate paper. If the information disclosure statement is filed as part of a statement under 37 CFR 1.530, the submission may include a discussion of the patentability issues in the reexamination. If, however, the submission is filed as a separate paper, not part of a statement under 37 CFR 1.530, the submission must be limited to a listing of the information disclosed and an explanation of its relevance. See 37 CFR 1.98. Any discussion of the information disclosed relating to patentability issues in the reexamination would be improper.

Any individual substantially involved in the reexamination proceeding may satisfy his or her duty by disclosing the information to the attorney or agent having responsibility for the reexamination proceeding or to a patent owner acting in his or her own behalf. A patent owner may satisfy his or her duty by disclosing the information to the attorney or agent having responsibility for the reexamination proceeding. An attorney, agent, or patent owner who receives information has no duty to submit such information if it is not material to patentability in the reexamination proceeding. See 37 CFR 1.555(b) for the definition of "material to patentability."

The responsibility of compliance with 37 CFR 1.555 rests on all such individuals. Any fraud practiced or attempted on the Office or any violation of the duty of disclosure through bad faith or intentional misconduct by any such individual results in noncompliance with 37 CFR 1.555(a). This duty of disclosure is consistent with the duty placed on patent applicants by 37 CFR 1.56. Any such issues raised during a reexamination proceeding will merely be noted as unresolved questions under 37 CFR 1.552(c).

All such individuals who fail to comply with 37 CFR 1.555(a) do so at the risk of diminishing the quality and reliability of the reexamination certificate issuing from the proceeding.

See MPEP § 2282 for the patent owner's duty to disclose prior or concurrent proceedings in which the patent is or was involved.

2281 Interviews in Reexamination Proceedings

37 CFR 1.560. Interviews in reexamination proceedings.

(a) Interviews in *ex parte* reexamination proceedings pending before the Office between examiners and the owners of such patents or their attorneys or agents of record must be conducted in the Office at such times, within Office hours, as the respective examiners may designate. Interviews will not be permitted at any other time or place without the authority of the Commissioner. Interviews for the discussion of the patentability of claims in patents involved in *ex parte* reexamination proceedings will not be conducted prior to the first official action. Interviews should be arranged in advance. Requests that reexamination requesters participate in interviews with examiners will not be granted.

(b) In every instance of an interview with an examiner in an *ex parte* reexamination proceeding, a complete written statement of the reasons presented at the interview as warranting favorable action must be filed by the patent owner. An interview does not remove the necessity for response to Office actions as specified in § 1.111. Patent owner's response to an outstanding Office action after the interview does not remove the necessity for filing the written statement. The written statement must be filed as a separate part of a response to an Office action outstanding at the time of the interview, or as a separate paper within one month from the date of the interview, whichever is later.

Interviews are permitted in an *ex parte* reexamination proceeding. In the *ex parte* proceeding, only *ex parte* interviews between the examiner and patent owner and/or the patent owner's representative are permitted. Requests by third party requesters to participate in interviews or to attend interviews will not be granted.

Unless the Office of Patent Legal Administration authorizes otherwise, interviews between examiner and the owners of patents undergoing *ex parte* reexamination or their attorneys or agents must be had in the Office at such times, within Office hours, as the respective examiners may designate.

Interviews for the discussion of the patentability of claims in patents involved in reexamination proceedings will ordinarily not be had prior to the first Office action following the order for reexamination and any submissions pursuant to 37 CFR 1.530 and 1.535. Such interviews will be permitted prior to the first Office action *only* where the examiner initiates the interview for the purpose of providing an amendment which will make the claims patentable and the patent owner's role is passive. The patent owner's role (or patent owner's attorney or agent) is limited to agreeing to the change or not. The patent owner should not otherwise discuss the case on the merits during this interview.

The patent owner's questions on purely procedural matters may be answered by the examiner at any time during the proceeding.

Where any party who is not the patent owner requests information as to the merits of a reexamination proceeding, the examiner will not conduct a personal or telephone interview with that party to provide the information. Only questions on strictly procedural matters may be discussed with that party. A question by a party who is not the patent owner relating to when the next Office action will be rendered is improper as it relates to the merits of the proceeding.

The examiner must complete Interview Summary form PTOL-474 for each interview held where a matter of substance has been discussed (see MPEP § 713.04). A copy of the form should be given to the patent owner at the conclusion of the interview. The original should be made of record in the reexamination file, and a copy should be mailed to any third party requester.

The general procedure for conducting interviews and recording same is described at MPEP § 713.01 - § 713.04.

PATENT OWNER'S STATEMENT OF THE INTERVIEW

In every instance of an interview with the examiner, a patent owner's statement of the interview, including a complete written statement of the reasons presented at the interview as warranting favorable action, **must** be filed by the patent owner. This requirement cannot be waived by the examiner. Patent owners are encouraged to submit such written statement as soon after the interview as is possible, and *no later than the next communication to the Office*. Service of the written statement of the interview on any third party requester is required.

2282 Notification of Existence of Prior or Concurrent Proceedings and Decisions Thereon

37 CFR 1.565. Concurrent office proceedings which include an ex parte reexamination proceeding.

(a) In an *ex parte* reexamination proceeding before the Office, the patent owner must inform the Office of any prior or concurrent proceedings in which the patent is or was involved

such as interferences, reissues, *ex parte* reexaminations, *inter partes* reexaminations, or litigation and the results of such proceedings. See § 1.985 for notification of prior or concurrent proceedings in an *inter partes* reexamination proceeding.

*****

It is important for the Office to be aware of any prior or concurrent proceedings in which a patent undergoing reexamination is or was involved, such as interferences, reissues, reexaminations or litigations; and any results of such proceedings. In accordance with 37 CFR 1.565(a), the patent owner is required to provide the Office with information regarding the existence of any such proceedings, and the results thereof, if known. Ordinarily, no submissions of any kind by third parties filed after the date of the order are placed in the reexamination or patent file while the reexamination proceeding is pending. However, in order to ensure a complete file, with updated status information regarding prior or concurrent proceedings regarding the patent under reexamination, the Office will, at any time, accept for placement in the reexamination file copies from any parties of notices of suits and other proceedings involving the patent and copies of decisions or papers filed in the court from litigations or other proceedings involving the patent. Persons making such submissions must limit the submissions to the notification, and must not include further arguments or information. Where a submission is not limited to bare notice of the prior or concurrent proceedings (in which a patent undergoing reexamination is or was involved), the submission will be returned by the Office. Any proper submission pursuant to 37 CFR 1.565(a) will be promptly placed of record in the reexamination file. See MPEP § 2286 for Office investigation for prior or concurrent litigation.

Form paragraph 22.07 or 22.08, if appropriate, may be used to remind the patent owner of the continuing duty under 37 CFR 1.565(a) to apprise the Office of any litigation activity.

2283 Multiple Copending Reexamination Proceedings

37 CFR 1.565. Concurrent Office proceedings which include an ex parte reexamination proceeding.

*****

(c) If *ex parte* reexamination is ordered while a prior *ex parte* reexamination proceeding is pending and prosecution in the prior *ex parte* reexamination proceeding has not been terminated, the *ex parte* reexamination proceedings will be consolidated and result in the issuance of a single certificate under § 1.570. For merger of *inter partes* reexamination proceedings, see § 1.989(a). For merger of *ex parte* reexamination and *inter partes* reexamination proceedings, see § 1.989(b).

*****

See MPEP § 2240 for a discussion as to whether a substantial new question of patentability is raised by the prior art cited in a second or subsequent request for reexamination filed while a reexamination proceeding is pending.

If reexamination is ordered on a request for reexamination while a prior reexamination proceeding is still pending, the decision on whether or not to combine the proceedings will be made by the Technology Center (TC) Director where the reexamination is pending. The TC Director may delegate this to the TC Special Program Examiner. No decision on combining the reexaminations should be made until reexamination is actually ordered in the later filed request for reexamination.

PROCEEDINGS MERGED

If a second request for reexamination is filed where a first certificate will issue for the first reexamination later than 3 months from the filing of the second request, the proceedings normally will be merged. In this situation the second request is decided based on the original patent claims and if reexamination is ordered, the reexamination proceedings normally would be merged. If the first reexamination is in "issue" for publication of a certificate, it will be withdrawn from issue. The second reexamination proceeding will be merged with the first reexamination proceeding and prosecution will continue after the patent owner and second requester have been given an opportunity to file a statement and reply, respectively.

If the second request is based upon essentially the *same* patents or publications as in the first request or on patents or printed publications which raise essentially the same issues as those raised in the first request, and if reexamination is ordered, the examination of the merged proceeding will continue at the point reached in the first reexamination proceeding. If, however, *new* patents or printed publications are presented in the second request which raise different

questions than those raised in the first request, then prosecution in the merged reexamination proceeding will be reopened, if applicable, to the extent necessary to fully treat the questions raised.

The patent owner will be provided with an opportunity to respond to any new rejection in a merged reexamination proceeding prior to the action being made final. See MPEP § 2271. If the reexamination proceedings are combined, a single certificate will be issued based upon the combined proceedings, 37 CFR 1.565(c).

WHEN PROCEEDING IS SUSPENDED

It may also be desirable in certain situations to suspend a proceeding for a short and specified period of time. For example, a suspension of a first reexamination proceeding may be issued to allow time for the patent owner's statement and the requester's reply in a second proceeding prior to merging. Further, after the second proceeding *has been ordered*, it may be desirable to suspend the second proceeding where the first proceeding is presently on appeal before a Federal court to await the court's decision prior to merging. A suspension will only be granted in extraordinary instances, because of the statutory requirements that examination proceed with "special dispatch." The express written approval of the TC Director must be obtained. Suspension will <u>not</u> be granted when there is an outstanding Office action.

MERGER OF REEXAMINATIONS

The following guidelines should be observed when two requests for reexamination directed to a single patent have been filed.

The second request (i.e., Request 2) should be processed as quickly as possible and assigned to the same examiner to whom the first request (i.e., Request 1) is assigned. Request 2 should be decided immediately without waiting the usual period. If Request 2 is denied, *ex parte* prosecution of Request 1 should continue. If Request 2 is granted, the order in the second proceeding should be mailed immediately. The two requests should be held in storage until the patent owner's statement and any reply by the requester have been received in Request 2, or until the time for filing same expires. Then, the TC Director or the TC Director's delegate will prepare a decision merging the two proceedings.

The decision by the TC Director merging the reexamination proceedings should include a requirement that the patent owner maintain identical claims in both files. It will further require that responses by the patent owner must consist of a single response, addressed to both files, filed in duplicate, each bearing a signature, for entry in both files. The decision will point out that both files will be maintained as separate complete files. The decision of merger will indicate at its conclusion that the patent owner is given 1 month to provide a housekeeping amendment to make the claims the same in each file, where such an amendment is needed. Where the claims are already the same in both files, the decision will indicate at its conclusion that an Office action will be mailed in due course, and that the patent owner need not take any action at present. The decision of merger will be mailed immediately.

Where the merger decision indicates that the patent owner is given 1 month to provide a housekeeping amendment (to place identical amendments in all files), the files will be held in storage to await submission of the amendment. After the amendment is received, it will be processed by the technical support staff and the file returned to the examiner, to issue an Office action. Where the merger decision indicates that an Office action will follow, the files are returned to the examiner immediately after the decision, to issue the action.

Once the files are returned to the examiner for issuance of an Office action, the examiner should prepare an Office action at the most advanced point possible for the first proceeding. Thus, if the first proceeding is ready for a final rejection and the second proceeding does not provide any new information which would call for a new ground of rejection, the examiner should issue a final rejection for the merged proceeding using the guidelines for the prosecution stage set forth below.

If the *ex parte* prosecution stage has not yet begun in Request 1 when Request 2 is received, Request 1 should be processed to the point where it is ready for *ex parte* prosecution. Then, Request 1 is normally held until Request 2 is granted and is ready for *ex parte* action following the statement and reply. Thereafter, the two proceedings would be merged. However, if Request 2 is denied, there would be no merger and prosecution will be carried out solely on

Request 1. Note that Request 2 should be determined on its own merits and should not rely on nor refer to the decision in Request 1.

In the event that a housekeeping amendment is required by the merger decision (to place identical amendments in all files) but is not timely submitted, any claim that does not contain identical text in all of the merged proceedings should be rejected under 35 U.S.C. 112, second paragraph, as being indefinite as to the content of the claim, and thus failing to particularly point out the invention.

THE PROSECUTION STAGE, AFTER MERGER

When prosecution is appropriate in merged proceedings, a single combined examiner's action will be prepared. Each action will contain the control number of the two proceedings on every page. A single action cover form (having both control numbers penned in at the top) will be provided by the examiner to the clerical staff. The clerical staff will copy the action cover form, and then use the PALM printer to print the appropriate data (A) on the original for the first request and (B) on the copy for the second request. The appropriate paper number will be entered on the action cover form for each file (these numbers will often be different). Each requester will receive a copy of the action and both action cover forms, with the transmission form PTOL-465 placed on top of the package. The patent owner will get a copy of both action cover forms and the action itself.

When a "Notice Of Intent To Issue Reexamination Certificate" (NIRC) is appropriate, plural notices will be printed. Both reexamination files will then be processed. The TC should prepare the file of the concurrent proceedings in the manner specified in MPEP § 2287 before release to Office of Publications.

The above guidelines should be extended to those situations where more than two requests for reexamination are filed for a single patent.

PROCEEDINGS NOT MERGED

If a second request is filed where the first reexamination certificate will issue within 3 months from the filing of the second request, the proceedings normally will not be merged. If the certificate on the first reexamination proceeding will issue before the decision on the second request must be decided, the reexamination certificate is allowed to issue. The second request is then considered based upon the claims in the patent as indicated in the issued reexamination certificate rather than the original claims of the patent. In such situations the proceedings will not be merged. However, it should be noted that where the second request relies on the *same substantial new question of patentability that the first reexamination proceeding relies upon*, the question as to merger should be referred to the TC Special Program Examiner. In NO case should a decision on the second request be delayed beyond its 3-month deadline.

FEES IN MERGED PROCEEDINGS

Where the proceedings have been merged and a paper is filed which requires payment of a fee (e.g., petition fee, appeal fee, brief fee, oral hearing fee), only a single fee need be paid. For example, only one fee need be paid for an appeal brief even though the brief relates to merged multiple proceedings and copies must be filed for each file in the merged proceeding.

PETITION TO MERGE MULTIPLE COPENDING REEXAMINATION PROCEEDINGS

No petition to merge multiple reexamination proceedings is necessary since the Office will generally, *sua sponte,* make a decision as to whether or not it is appropriate to merge the multiple reexamination proceedings. If any petition to merge the proceedings is filed prior to the determination (37 CFR 1.515) and order to reexamine (37 CFR 1.525) on the second request, it will not be considered but will be returned to the party submitting the same by the TC Director. The decision returning such a premature petition will be made of record in both reexamination files, but no copy of the petition will be retained by the Office. See MPEP § 2267.

While the patent owner can file a petition to merge the proceedings at any time after the order to reexamine (37 CFR 1.525) on the second request, the better practice is to include any such petition with the patent owner's statement under 37 CFR 1.530, in the event the TC Director has not acted prior to that date to merge the multiple reexamination proceedings. If the requester of any of the multiple reexamination proceedings is not the patent owner, that party may petition to merge the proceedings as a part of a reply

pursuant to 37 CFR 1.535 in the event the TC Director has not acted prior to that date to merge the multiple proceedings. A petition to merge the multiple proceedings which is filed by a party other than the patent owner or one of the requesters of the reexamination will not be considered but will be returned to that party by the TC Director as being improper under 37 CFR 1.550(e).

All decisions on the merits of petitions to merge multiple reexamination proceedings will be made by the TC Director (or to the TC Special Program Examiner, if the TC Director delegates it to him or her).

2284 Copending Reexamination and Interference Proceedings

37 CFR 1.565. Concurrent office proceedings which include an ex parte reexamination proceeding.

(a) In an *ex parte* reexamination proceeding before the Office, the patent owner must inform the Office of any prior or concurrent proceedings in which the patent is or was involved such as interferences, reissues, *ex parte* reexaminations, *inter partes* reexaminations, or litigation and the results of such proceedings. See § 1.985 for notification of prior or concurrent proceedings in an *inter partes* reexamination proceeding.

*****

(e) If a patent in the process of *ex parte* reexamination is or becomes involved in an interference, the Commissioner may suspend the reexamination or the interference. The Commissioner will not consider a request to suspend an interference unless a motion (§ 1.635) to suspend the interference has been presented to, and denied by, an administrative patent judge, and the request is filed within ten (10) days of a decision by an administrative patent judge denying the motion for suspension or such other time as the administrative patent judge may set. For concurrent *inter partes* reexamination and interference of a patent, see § 1.993.

37 CFR 1.660. Notice of reexamination, reissue, protest, or litigation.

(a) When a request for reexamination of a patent involved in an interference is filed, the patent owner shall notify the Board within 10 days of receiving notice that the request was filed.

*****

A patent being reexamined in a reexamination proceeding may be involved in an interference proceeding with at least one application, where the patent and the application are claiming the same patentable invention, and at least one of the application's claims to that invention are patentable to the applicant. See MPEP § 2306.

The general policy of the Office is that a reexamination proceeding will not be delayed, or stayed, because of an interference or the possibility of an interference. The reasons for this policy are (A) the relatively long period of time usually required for interferences and (B) the requirement of 35 U.S.C. 305 that all reexamination proceedings be conducted with "special dispatch" within the Office. In general, the Office will follow the practice of making the required and necessary decisions in the reexamination proceeding and, at the same time, going forward with the interference to the extent desirable. Decisions in the interference will take into consideration the status of the reexamination proceeding and what is occurring therein. The decision as to what actions are taken in the interference will, in general, be taken in accordance with normal interference practice.

It must be noted that although a *patent* being reexamined via a reexamination proceeding may become involved in an interference proceeding, the reexamination proceeding itself can never be involved in an interference proceeding. See 35 U.S.C. 135 subsection (a) which states that "[w]henever an application is made for a patent which, in the opinion of the Commissioner, would interfere with any pending *application*, or with any unexpired *patent*, an interference may be declared" (emphasis added). The reexamination proceeding is neither an application nor a patent.

ATTEMPTING TO PROVOKE AN INTERFERENCE WITH A PATENT INVOLVED IN A REEXAMINATION PROCEEDING

When an amendment seeking to provoke an interference with a patent involved in a reexamination proceeding is filed in a pending application, applicant must comply with 37 CFR 1.607(a) and (c), including identifying the patent under reexamination with which interference is sought. See MPEP § 2307. Upon receipt of such an amendment, the examiner must notify the owner of the patent pursuant to 37 CFR 1.607(d)). Form paragraph 23.20 may be used to so notify applicant; see MPEP § 2307.06. The corresponding application claims may be rejected on any applicable ground including, if appropriate, the prior art cited in the reexamination proceeding. See MPEP § 2307.02. Prosecution of the application should continue as far as possible; if the application is placed in condition for allowance and still contains claims

which interfere with claims of the patent under reexamination, then an interference should ordinarily be proposed between the application and the patent. The examiner must notify the Office of Patent Legal Administration (OPLA) before proposing the interference, and such an interference may not be proposed unless authorized by OPLA.

If the interference is not authorized (e.g., resolution of an issue in the reexamination proceeding is necessary to the interference), further action on the application should be suspended until the certificate on the reexamination proceeding has been issued. Form paragraph 23.16 may be used to notify applicant of the suspension.

Once the reexamination certificate has issued, the examiner should review the certificate to see if it makes any changes in the patent claims and then evaluate whether the patent still contains claims which interfere with claims of the application. If the claims do interfere, then the examiner should propose an interference. See MPEP § 2309.02.

If the claims do not interfere, then the examiner should so notify the owner of the patent pursuant to 37 CFR 1.607(d). Form paragraph 23.21 may be used; see MPEP § 2307.06.

MOTION/REQUEST TO SUSPEND INTERFERENCE PENDING THE OUTCOME OF A REEXAMINATION PROCEEDING

A motion under 37 CFR 1.635 to suspend an interference pending the outcome of a reexamination proceeding may be made at any time during the interference by any party thereto. The motion must be presented to the administrative patent judge who will decide the motion based on the particular fact situation. However, no consideration will be given such a motion unless and until a reexamination order is issued, nor will suspension of the interference normally be permitted until after any motions have been disposed of. If the motion under 37 CFR 1.635 is denied by the administrative patent judge, a request to stay the interference may be made to the Commissioner under 37 CFR 1.565(e).

It is noted that the 37 CFR 1.644(a)(2) petition might appear to overlap the 37 CFR 1.565(e) request to stay an interference; however, 37 CFR 1.644(b) states that "[a] petition under paragraph (a)(2) of this section shall not be filed prior to the party's brief for final hearing (see § 1.656)." The request to stay an interference under 37 CFR 1.565(e) is thus not covered by 37 CFR 1.644(a)(1)-(3); and 37 CFR 1.565(e) provides an additional aspect of relief to the public.

A request to stay an interference under 37 CFR 1.565(e) will be decided by the Chief Administrative Patent Judge of the Board of Patent Appeals and Interferences.

ACTION PURSUANT TO 37 CFR 1.641

Normally, examiners should not have to alert the administrative patent judge of the need for action under 37 CFR 1.641 while the reexamination proceeding is pending. Rather, examiners should rely on the parties of the interference to file a notice under 37 CFR 1.660. See also the discussion in the next paragraph.

REQUEST FOR REEXAMINATION FILED DURING INTERFERENCE

In view of the provisions of 37 CFR 1.510(a), "Any person may, at any time during the period of enforceability of a patent" file a request for reexamination. Under 37 CFR 1.660, the patent owner must notify the Board of Patent Appeals and Interferences that a request for reexamination was filed, within 10 days of receiving notice of the request having been filed. Where it is the patent owner that files the request for reexamination, the 10 days run from the filing date of the request, since that is when the patent owner "received the notice" of filing the request. Such requests for reexamination will be processed in the normal manner. No delay, or stay, of the reexamination will occur because the requester is not a party to the interference. If the examiner orders reexamination pursuant to 37 CFR 1.525 and subsequently rejects a patent claim corresponding to a count in the interference, the attention of the administrative patent judge shall be called thereto and appropriate action may be taken under 37 CFR 1.641.

INTERFERENCE DECLARED WHILE REEXAMINATION PROCEEDING IS ONGOING

Under 37 CFR 1.565, the patent owner in a reexamination proceeding before the Office is required to notify the Office when the patent being reexamined becomes involved in an interference. To do so, the patent owner must file in the reexamination

proceeding a paper giving notice of the interference proceeding. The requirements of 37 CFR 1.565, and of 37 CFR 1.660 (see the preceding paragraph), are designed to keep the Office and the appropriate parties informed of activity which is relevant to reexamination and interference proceedings and, to the extent possible, to eliminate procedural surprise.

PETITION TO STAY REEXAMINATION PROCEEDING BECAUSE OF INTERFERENCE

Any petition to stay a reexamination proceeding, because of an interference, which is filed prior to the determination (37 CFR 1.515) and order to reexamine (37 CFR 1.525) will not be considered, but will be returned to the party submitting the same. The decision returning such a premature petition will be made of record in the reexamination file, but no copy of the petition will be retained by the Office. A petition to stay the reexamination proceeding because of the interference may be filed by the patent owner as a part of the patent owner's statement under 37 CFR 1.530 or subsequent thereto. If a party to the interference, other than the patent owner, is a requester of the reexamination, that party may petition to stay the reexamination proceeding as a part of a reply pursuant to 37 CFR 1.535. If the other party to the interference is not the requester, any petition by that party is improper under 37 CFR 1.550(e) and will not be considered. Any such improper petitions will be returned to the party submitting the same. Premature petitions to stay the reexamination proceedings, i.e., those filed prior to the determination (37 CFR 1.515) and order to reexamine (37 CFR 1.525), will be returned by the Technology Center (TC) Director as premature. Petitions to stay filed subsequent to the date of the order for reexamination will be referred to the OPLA for decision. All decisions on the merits of petitions to stay a reexamination proceeding because of an interference will be made in the OPLA.

ACTION IN INTERFERENCE FOLLOWING REEXAMINATION

If one or more claims of a patent which is involved in an interference are canceled or amended by the issuance of a reexamination certificate, appropriate action will be taken by the administrative patent judge under 37 CFR 1.641.

Upon issuance of the reexamination certificate, the patent owner must notify the administrative patent judge thereof.

2285 Copending Reexamination and Reissue Proceedings

37 CFR 1.565. Concurrent office proceedings which include an ex parte reexamination proceeding.

*****

(d) If a reissue application and an *ex parte* reexamination proceeding on which an order pursuant to § 1.525 has been mailed are pending concurrently on a patent, a decision will normally be made to merge the two proceedings or to suspend one of the two proceedings. Where merger of a reissue application and an *ex parte* reexamination proceeding is ordered, the merged examination will be conducted in accordance with §§ 1.171 through 1.179, and the patent owner will be required to place and maintain the same claims in the reissue application and the *ex parte* reexamination proceeding during the pendency of the merged proceeding. The examiner's actions and responses by the patent owner in a merged proceeding will apply to both the reissue application and the *ex parte* reexamination proceeding and be physically entered into both files. Any *ex parte* reexamination proceeding merged with a reissue application shall be terminated by the grant of the reissued patent. For merger of a reissue application and an *inter partes* reexamination, see § 1.991.

*****

The general policy of the Office is that a reissue application examination and a reexamination proceeding will not be conducted separately at the same time as to a particular patent. The reason for this policy is to permit timely resolution of both proceedings to the extent possible and to prevent inconsistent, and possibly conflicting, amendments from being introduced into the two proceedings on behalf of the patent owner. Accordingly, if both a reissue application and a reexamination proceeding are pending concurrently on a patent, a decision will normally be made (A) to merge the two proceedings <u>or</u> (B) to stay one of the two proceedings. The decision as to whether the proceedings are to be merged, or which proceeding (if any) is to be stayed is made in the Office of Patent Legal Administration (OPLA). See *In re Onda*, 229 USPQ 235 (Comm'r Pat. 1985).

TIME FOR MAKING DECISION ON MERGING OR STAYING THE PROCEEDINGS

A decision whether or not to merge the reissue application examination and the reexamination proceeding, or to stay one of the two proceedings, will not be made prior to the mailing of an order to reexamine the patent pursuant to 37 CFR 1.525. Until such time as reexamination is ordered, the examination of the reissue application will proceed. A determination on the request must not be delayed because of the existence of a copending reissue application, since 35 U.S.C. 304 and 37 CFR 1.515 *require a determination within 3 months* following the filing date of the request. See MPEP § 2241. If the decision on the request denies reexamination (MPEP § 2247), the examination of the reissue application should be continued. If reexamination is ordered (MPEP § 2246), the reexamination file, the reissue application, and the patent file should be delivered to the OPLA promptly, following the mailing of the decision ordering reexamination. The delivery of the files to the OPLA should not be delayed awaiting the filing of any statement under 37 CFR 1.530 and any reply under 37 CFR 1.535, or the expiration of the time for same.

If a reissue application is filed during the pendency of a reexamination proceeding, the reexamination file, the reissue application, and the patent file should be delivered to the OPLA as promptly as possible after the reissue application reaches the Technology Center (TC).

The decision on whether or not the proceedings are to be merged, or which proceeding (if any) is to be stayed, will generally be made as promptly as possible after receipt of all of the files in the OPLA. Until a decision is mailed merging the proceedings or staying one of the proceedings, the two proceedings will continue and be conducted simultaneously, but separately.

The Office may in certain situations issue a certificate at the termination of a reexamination proceeding, even if a copending reissue application or another reexamination request has already been filed.

CONSIDERATIONS IN DECIDING WHETHER TO MERGE THE PROCEEDINGS OR WHETHER TO STAY A PROCEEDING

The decision on whether to merge the proceedings or stay a proceeding will be made on a case-by-case basis based upon the status of the various proceedings. Due consideration will be given to the finality of the reexamination requested.

A. Reissue About To Issue, Reexamination Requested.

If the reissue patent will issue before the determination on the reexamination request must be made, the determination on the request should normally be delayed until after the granting of the reissue patent; and then the determination should be made on the basis of the claims *in the reissue patent*. The reexamination, if ordered, would then be on the reissue patent claims rather than the original patent claims. Since the reissue application would no longer be pending, the reexamination would be processed in a normal manner.

Where a reissue patent has been issued, the determination on the request for reexamination should specifically point out that the determination has been made on the claims of the reissue patent and not on the claims of the original patent. Any amendment made in the reexamination proceeding should treat the changes made by the reissue as the text of the patent, and all bracketing and underlining made with respect to the patent **as changed by the reissue**. If a reissue patent issues on the patent under reexamination after reexamination is ordered the next action from the examiner in the reexamination should point out that further proceedings in the reexamination will be based on the claims of the reissue patent and not on the patent surrendered. Form paragraph 22.05 may be used in the Office action.

¶ 22.05 Reexamination Based on Reissue Claims

In view of the surrender of original Patent No. **[1]** and the granting of Reissue Patent No. **[2]** which issued on **[3]**, all subsequent proceedings in this reexamination will be based on the reissue patent claims.

Where the reissue patent has issued prior to the filing of a request for reexamination of the parent patent, see MPEP § 2258.

B. Reissue Pending, Reexamination Request Filed.

Where a reissue patent will not be granted prior to the expiration of the 3-month period for making the determination on the reexamination request, a decision will be made as to whether the proceedings are to

be merged, or which proceeding (if any) is to be stayed, after an order to reexamine has been issued. The general policy of the Office is to merge the more narrow reexamination proceeding with the broader reissue application examination whenever it is desirable to do so in the interests of expediting the conduct of both proceedings. In making a decision on whether or not to merge the two proceedings, consideration will be given to the status of the reissue application examination at the time the order to reexamination the patent pursuant to 37 CFR 1.525 is mailed. For example, if examination of the reissue application has not begun, or if a rejection by the primary examiner has not been appealed to the Board of Patent Appeals and Interferences pursuant to 37 CFR 1.191, it is likely that the OPLA will order a merger of the reissue application examination and the reexamination proceeding. If, however, the reissue application is on appeal to the Board of Patent Appeals and Interferences or the courts, that fact would be considered in making a decision whether to merge the proceedings or stay one of the proceedings. See *In re Stoddard*, 213 USPQ 386 (Comm'r Pat. 1982); and *In re Scragg*, 215 USPQ 715 (Comm'r Pat. 1982).

If such a merger of the proceedings is ordered, the order merging the proceedings will also require that the patent owner place the same claims in the reissue application and in the reexamination proceeding for purposes of the merged proceedings. An amendment may be required to be filed to do this within a specified time set in the order merging the proceedings.

If the reissue application examination has progressed to a point where a merger of the two proceedings is not desirable at that time, then the reexamination proceeding will generally be stayed until the reissue application examination is complete on the issues then pending. After completion of the examination on the issues then pending in the reissue application examination, the stay of the reexamination proceeding will be removed and the proceedings either merged or the reexamination proceeding will be conducted separately if the reissue application has become abandoned. The reissue application examination will be reopened, if necessary, for merger of the reexamination proceeding therewith.

If a stay of a reexamination proceeding has been removed following a reissue application examination, the first Office action will be given a shortened statutory period for response of 1 month unless a longer period for response clearly is warranted by the nature of the examiner's action. The second Office action will normally be final and also have a 1-month period for response. These shortened periods are considered necessary to prevent undue delay in terminating the proceedings and also to proceed with "special dispatch" in view of the earlier stay.

If the reissue application examination and the reexamination proceeding are merged, the issuance of the reissue patent will also serve as the certificate under 37 CFR 1.570 and the reissue patent will so indicate.

C. Reexamination Proceedings Underway, Reissue Application Filed.

When a reissue application is filed after a reexamination proceeding has begun following an order therefor, the reexamination, patent, and the reissue files should be forwarded to the OPLA for consideration as to whether or not to merge the proceedings or stay one proceeding.

Where reexamination has already been ordered prior to the filing of a reissue application, the following factors may be considered in deciding whether to merge the proceedings or stay one proceeding:

(A) The status of the reexamination proceeding: For example, consideration will be given as to whether a statement and reply have been received, a first Office action has been mailed, a final rejection has been given, or printing of certificate has begun;

(B) The nature and scope of the reissue application: For example, consideration will be given as to whether the issues presented in the proceedings are the same, overlapping, or completely separate; and whether the reissue claims are broadened or are related to issues other than rejections based on patents or printed publications.

CONDUCT OF MERGED REISSUE APPLICATION EXAMINATION AND REEXAMINATION PROCEEDINGS

Where the merger decision indicates that the patent owner is given 1 month to provide a housekeeping amendment (to place identical amendments in all files), the files will be held in storage to await submission of the amendment. After the amendment is received, it will be processed by the technical support

staff and the file returned to the examiner, to issue an Office action. Where the merger decision indicates that an Office action will follow, the files are returned to the examiner immediately after the decision, to issue the action.

Once the files are returned to the examiner for issuance of an Office action, the examiner should prepare an Office action at the most advanced point possible for the first proceeding. Thus, if the first proceeding is ready for a final rejection and the second proceeding does not provide any new information which would call for a new ground of rejection, the examiner should issue a final rejection for the merged proceeding.

In the event that a housekeeping amendment is required by the merger decision (to place identical amendments in all files) but is not timely submitted, any claim that does not contain identical text in all of the merged proceedings should be rejected under 35 U.S.C. 112, paragraph 2, as being indefinite as to the content of the claim, and thus failing to particularly point out the invention.

If a reissue application examination and a reexamination proceeding are merged, the merged examination will be conducted on the basis of the rules relating to the broader reissue application examination. Amendments should be submitted in accordance with the reissue practice under 37 CFR 1.121(h) and 37 CFR 1.173; see MPEP § 1453. The examiner, in examining the merged proceeding, will apply the reissue statute, rules, and case law to the merged proceeding. This is appropriate in view of the fact that the statutory provisions for reissue applications and reissue application examination include provisions equivalent to 35 U.S.C. 305 relating to the conduct of reexamination proceedings.

In any merged reissue application and reexamination proceeding, each Office action issued by the examiner will take the form of a single action which jointly applies to both the reissue application and the reexamination proceeding. Each action will contain identifying data for both the reissue application and the reexamination proceeding, and each action will be physically entered into both files, which will be maintained as separate files.

Any response by the applicant/patent owner in such a merged proceeding must consist of a single response, filed in duplicate for entry in both files (or provide multiple copies if there are multiple reexamination proceedings being merged with a reissue application), and service of copy must be made on any third party reexamination requester. A copy of all Office actions will be mailed to the third party reexamination requester but not to any other third party.

If the applicant/patent owner in such a merged proceeding fails to file a timely and appropriate response to any Office action, the merged proceeding will be terminated. The reissue application will be held abandoned. A NIRC will be issued (see MPEP § 2287), and the Commissioner will proceed to issue a reexamination certificate under 37 CFR 1.570 in accordance with the last action of the Office, unless further action is clearly needed in view of the difference in rules relating to reexamination and reissue proceedings.

If the applicant/patent owner in such a merged proceeding files an express abandonment of the reissue application pursuant to 37 CFR 1.138, the next Office action of the examiner will accept the express abandonment, dissolve the merged proceeding, and continue the reexamination proceeding. Upon dissolution of the merged proceeding, any grounds of rejection which are not applicable under reexamination should be withdrawn (e.g., based on public use or sale) and any new grounds of rejection which are applicable under reexamination (e.g., improper broadened claims) should be made by the examiner. The existence of any questions remaining which cannot be considered under reexamination following dissolution of the merged proceeding would be noted by the examiner as not being proper under reexamination pursuant to 37 CFR 1.552(c).

If applicant/patent owner files a continued prosecution reissue application (a CPA) under 37 CFR 1.53(d), whereby the existing reissue application is considered to be expressly abandoned, this will most likely result in the dissolution of the merged proceeding, a stay of the CPA reissue application, and separate, continued prosecution of the reexamination proceeding.

If applicant/patent owner files a request for continued examination (RCE) of the reissue application under 37 CFR 1.114 (which may be filed on or after May 29, 2000 for an application filed on or after June 8, 1995), the reissue application is not considered to be expressly abandoned and the merged proceeding will continue. This is so, because an RCE is not an

abandonment of any application, whether it be a reissue application or a non-reissue application.

PETITION TO MERGE REISSUE APPLICATION EXAMINATION AND REEXAMINATION PROCEEDINGS OR TO STAY EITHER PROCEEDING BECAUSE OF THE EXISTENCE OF THE OTHER

No petition to merge the proceedings, or stay one of them, should be filed before an order directing reexamination is issued because the Office will generally, *sua sponte*, make a decision to merge the proceedings or stay one of them. If any petition to merge the proceedings, or to stay one proceeding because of the other, is filed prior to the determination (37 CFR 1.515) and order to reexamine (37 CFR 1.525), it will not be considered, but will be returned to the party submitting the same by the TC Director, regardless of whether the petition is filed in the reexamination proceeding, the reissue application, or both. This is necessary to prevent premature papers relating to the reexamination proceeding from being filed. The decision returning such a premature petition will be made of record in both the reexamination file and the reissue application file, but no copy of the petition will be retained by the Office. See MPEP § 2267.

The patent owner may file a petition under 37 CFR 1.182 to merge the proceedings, or stay one proceeding because of the other, at the time the patent owner's statement under 37 CFR 1.530 is filed or subsequent thereto in the event the Office has not acted prior to that date to merge the proceedings or stay one of them. If the requester of the reexamination is not the patent owner, that party may petition to merge the proceedings, or stay one proceeding because of the other, as a part of a reply pursuant to 37 CFR 1.535, in the event the Office has not acted prior to that date to merge the proceedings or stay one of them. A petition to merge the proceedings, or stay one of them because of the other, which is filed by a party other than the patent owner or the requester of the reexamination will not be considered, but will be returned to that party by the TC Director as being improper under 37 CFR 1.550(e).

All decisions on the merits of petitions to merge the reissue application examination and the reexamination proceeding, or to stay one proceeding because of the other, will be made in the OPLA. Such petitions to merge the proceedings, or stay one of the proceedings because of the other, which are filed by the patent owner or the requester after the order for reexamination will be referred to the OPLA for decision.

FEES IN MERGED PROCEEDINGS

Where the proceedings have been merged and a paper is filed which requires payment of a fee (e.g., petition fee, appeal fee, brief fee, oral hearing fee), only a single fee need be paid. For example, only one fee need be paid for an appeal brief even though the brief relates to merged multiple proceedings and copies must be filed for each file in the merged proceeding.

2286 Reeexamination and Litigation Proceedings

37 CFR 1.565. Concurrent office proceedings which include an ex parte reexamination proceeding.

*****

(b) If a patent in the process of *ex parte* reexamination is or becomes involved in litigation, the Commissioner shall determine whether or not to suspend the reexamination. See § 1.987 for *inter partes* reexamination proceedings.

*****

35 U.S.C. 302 permits a request for reexamination to be filed "at any time." Requests for reexamination are frequently filed where the patent for which reexamination is requested is involved in concurrent litigation. The guidelines set forth below will generally govern Office handling of reexamination requests where there is concurrent litigation in the Federal courts.

COURT-SANCTIONED REEXAMINATION PROCEEDING OR LITIGATION STAYED FOR REEXAMINATION

Any request for reexamination which indicates (A) that it is filed as a result of an agreement by parties to litigation which agreement is sanctioned by a court, or (B) that litigation is stayed for the filing of a reexamination request will be taken up by the examiner for decision 6 weeks after the request was filed. See MPEP § 2241. If reexamination is ordered, the examination following the statement by the patent owner under 37 CFR 1.530 and the reply by the requester under 37 CFR 1.535 will be expedited to

the extent possible. Office actions in these reexamination proceedings will normally set a 1-month shortened statutory period for response rather than the 2 months usually set in reexamination proceedings. See MPEP § 2263. This 1-month period may be extended only upon a showing of sufficient cause. See MPEP § 2265. See generally *In re Vamco Machine and Tool, Inc.*, 752 F.2d 1564, 224 USPQ 617 (Fed. Cir. 1985); *Gould v. Control Laser Corp.*, 705 F.2d 1340, 217 USPQ 985 (Fed. Cir. 1983); *Loffland Bros. Co. v. Mid-Western Energy Corp.*, 225 USPQ 886 (W.D. Okla. 1985); *The Toro Co. v. L.R. Nelson Corp.*, 223 USPQ 636 (C.D. Ill. 1984); *Digital Magnetic Systems, Inc. v. Ansley*, 213 USPQ 290 (W.D. Okla. 1982); *Raytek, Inc. v. Solfan Systems Inc.*, 211 USPQ 405 (N.D. Cal. 1981); and *Dresser Industries, Inc. v. Ford Motor Co.*, 211 USPQ 1114 (N.D. Texas 1981).

FEDERAL COURT DECISION KNOWN TO EXAMINER AT THE TIME THE DETERMINATION ON THE REQUEST FOR REEXAMINATION IS MADE

If a Federal Court decision *on the merits* of a patent is known to the examiner at the time the determination on the request for reexamination is made, the following guidelines will be followed by the examiner, whether or not the person who filed the request was a party to the litigation. When the initial question as to whether the prior art raises a substantial new question of patentability as to a patent claim is under consideration, the existence of a final court decision of claim *validity* in view of the same or different prior art does not necessarily mean that no new question is present, in view of the different standards of proof employed by the district courts and the Office. Thus, while the Office may accord deference to factual findings made by the court, the determination of whether a substantial new question of patentability exists will be made independently of the court's decision on validity as it is not controlling on the Office. A *non-final* holding of claim *invalidity* or unenforceability will not be controlling on the question of whether a substantial new question of patentability is present. A final holding of claim invalidity or unenforceability, however, is controlling on the Office. In such cases, a substantial new question of patentability would *not* be present as to the claims held invalid or unenforceable. See *Ethicon v. Quigg*, 849 F.2d 1422, 7 USPQ2d 1152 (Fed. Cir. 1988).

Any determination on a request for reexamination which the examiner makes after a Federal Court decision must be reviewed by the Technology Center (TC) Director to ensure that it conforms to the current Office litigation policy and guidelines. See MPEP § 2240. This review by the TC Director is a procedural review and is not a review of the merits of the examiner's determination. This review may be delegated by the TC Director to the TC Special Program Examiner.

For a discussion of the policy in specific situations where a Federal Court decision has been issued, see MPEP § 2242.

REEXAMINATION ORDERED PRIOR TO FEDERAL COURT DECISION IN CONCURRENT LITIGATION

In view of the statutory mandate to make the determination on the request within 3 months, the determination on the request based on the record before the examiner will be made without awaiting a decision by the Federal Court. It is not realistic to attempt to determine what issues will be treated by the Federal Court prior to the court decision. Accordingly, the determination on the request will be made without considering the issues allegedly before the court. If reexamination is ordered, the reexamination will continue until the Office becomes aware that a court decision has issued. At such time, the request will be reviewed in accordance with the guidelines set forth below. The patent owner is required by 37 CFR 1.565(a) to call the attention of the Office to any prior or concurrent proceeding in which the patent is involved or was involved. Thus, the patent owner has an obligation to promptly notify the Office that a decision has been issued in the Federal Court.

FEDERAL COURT DECISION ISSUES AFTER REEXAMINATION ORDERED

Pursuant to 37 CFR 1.565(a), the patent owner in a reexamination proceeding must promptly notify the Office of any Federal court decision involving the patent. Where the reexamination proceeding is currently pending and the court decision issues, or the Office becomes aware of a court decision relating to a pending reexamination proceeding, the order to

reexamine is reviewed to see if a substantial new question of patentability is still present. If no substantial new question of patentability is still present, the order to reexamine is vacated by the TC Director and reexamination is terminated.

A *non-final* district court decision concerning a patent under reexamination shall have no binding effect on a reexamination proceeding.

The issuance of a *final* district court decision upholding validity during a reexamination also will have no binding effect on the examination of the reexamination. This is because the court states in *Ethicon v. Quigg*, 849 F.2d 1422, 1428, 7 USPQ2d 1152, 1157 (Fed. Cir. 1988) that the Office is *not* bound by a court's holding of patent *validity* and should continue the reexamination. The court notes that district courts and the Office use different standards of proof in determining invalidity, and thus, on the same evidence, could quite correctly come to different conclusions. Specifically, invalidity in a district court must be shown by "clear and convincing" evidence, whereas in the Office, it is sufficient to show nonpatentability by a "preponderance of evidence." Since the "clear and convincing" standard is harder to satisfy than the "preponderance" standard, deference will ordinarily be accorded to the factual findings of the court where the evidence before the Office and the court is the same. If sufficient reasons are present, claims held valid by the court may be rejected in reexamination.

On the other hand, if the court issues a *final* holding of *invalidity*, that holding is binding on the Office, then the reexamination must be discontinued. Upon the issuance of a holding of claim invalidity or unenforceability by a district court, reexamination of the claims held to be invalid or unenforceable will continue in the Office until the court's decision becomes *final*. Upon the issuance of a *final* holding of invalidity or unenforceability, the claims held invalid or unenforceable will be withdrawn from consideration in the reexamination. The reexamination will continue as to any remaining claims. If all of the claims are *finally* held invalid or unenforceable, the reexamination will be vacated by the TC Director as no longer containing a substantial new question of patentability, and reexamination will be terminated.

LITIGATION REVIEW AND TECHNOLOGY CENTER DIRECTOR APPROVAL

In order to ensure that the Office is aware of prior or concurrent litigation, the examiner is responsible for conducting a reasonable investigation for evidence as to whether the patent for which reexamination is requested has been or is involved in litigation. The investigation will include a review of the reexamination file, the patent file, and the results of the litigation computer search by the STIC.

If the examiner discovers, *at any time* during the reexamination proceeding, that there is litigation or that there has been a federal court decision on the patent, the fact will be brought to the attention of the TC Director prior to any further action by the examiner. The TC Director must review any action taken by the examiner in such circumstances to ensure current Office litigation policy is being followed. This review is a procedural review and is not a review of the merits of the decision. This review may be delegated by the TC Director to the TC Special Program Examiner.

FEDERAL COURT DECISION CONTROLLING IN REEXAMINATION PROCEEDING

Once a federal court has ruled upon the merits of a patent and reexamination is still appropriate under the guidelines set forth above, the federal court decision will be considered controlling and will be followed as to claims finally held to be invalid by the court.

2287 Conclusion of Reexamination Proceeding

Upon conclusion of the reexamination proceeding, the examiner must prepare a "Notice of Intent to Issue Reexamination Certificate" (NIRC) by completing form PTOL-469. Where appropriate, an examiner's amendment will also be prepared. Where claims are found patentable, reasons must be given for each claim found patentable. See the discussion as to preparation of an examiner's amendment and reasons for allowance at the end of this section. In addition, the examiner must prepare the reexamination file so that the Office of Publications can prepare and issue a certificate in accordance with 37 CFR 1.570 and 35 U.S.C. 307 setting forth the results of

the reexamination proceeding and the content of the patent following the proceeding. See MPEP § 2288.

If it is the intent of the examiner to find any claim(s) patentable (confirmed or allowed) in concluding the reexamination proceeding, the examiner will so inform his/her supervisory patent examiner (SPE). The SPE will convene a patentability review conference (see MPEP § 2271.01), and the conference members will review the patentability of the claim(s). If the conference confirms the patentability of the claim(s), a NIRC shall be issued and signed by the examiner, with the two other conferees initialing the NIRC (as "conferee") to indicate their participation in the conference. Both conferees will initial, even though one of them may have dissented from the 3-party conference decision on the patentability of the claim(s). If the conference does not confirm the patentability of the claim(s), a NIRC will not be issued by the examiner; rather, the examiner will issue an appropriate Office action rejecting the claim(s), not confirmed as patentable.

A patentability review conference is not to be held as to any claim that was in the case (proceeding) at the time the case was reviewed by the Board of Patent Appeals and Interferences (Board) or a federal court. The following example will serve to illustrate this point. In a reexamination proceeding, claims 5-10 are allowed by the examiner, and claims 1-4 are rejected. The rejection of claims 1-4 is then appealed to the Board. The Board reverses the rejection of claims 1-4 and imposes a new ground of rejection of claims 1-4 under 37 CFR 1.196(b). The patent owner then elects further prosecution before the examiner pursuant to 37 CFR 1.196(b)(1) and submits an amended set of claims 1-4. The examiner finds amended claims 1-4 to be allowable and wishes to "allow" the entire case by issuing a NIRC. A patentability review conference must be held at this stage of the proceeding. The conferees will review the allowance of amended claims 1-4. The conferees will not, however, review the allowance of claims 5-10, because claims 5-10 were in the case, and before the Board at the time the Board decided the appeal.

A patentability review conference is not to be held where the proceeding is to be concluded by the cancellation of all claims.

Thus, a patentability review conference **must** be held in each instance where a NIRC is about to be issued, unless the NIRC is being issued: (A) following and consistent with a decision by the Board of Patent Appeals and Interferences (or court) on the merits of the proceeding; or (B) as a consequence of the patent owner's failure to respond or take other action where such a response or action is necessary to maintain pendency of the proceeding and, as a result of which failure to respond, all of the claims will be canceled.

A NIRC informs the patent owner and any third party requester that the reexamination proceeding has been terminated. The rules do not provide for an amendment to be filed in a reexamination proceeding after prosecution has been terminated. The provisions of 37 CFR 1.312 do *not* apply in reexamination. Any amendment, information disclosure statement, or other paper related to the merits of the reexamination proceeding filed after prosecution has been terminated must be accompanied by a petition under 37 CFR 1.182 to have the amendment considered.

Normally the title of the invention will not need to be changed during reexamination. If a change of the title is necessary, the patent owner should be notified of the need to provide an amendment changing the title as early as possible in the prosecution as a part of an Office action. If all of the claims are found to be patentable and a NIRC has been or is to be mailed, the examiner may change to the title of the invention only by an examiner's amendment. Changing the title and merely initialing the change is *not* permitted in reexamination.

If all of the claims are disclaimed in a patent under reexamination, a certificate under 37 CFR 1.570 will be issued indicating that fact.

In preparing the reexamination file for publication of the certificate, the examiner must review the reexamination and patent files to be sure that all the appropriate parts are completed. The review should include completion of the following items:

(A) the "Reexamination Field of Search" and the "Search Notes" — to be sure the file wrapper is filled in with the classes and subclasses that were actually searched and other areas consulted;

(B) the "Claim No. For O.G." box — to be sure that a representative claim which has been reexamined is indicated for publication in the *Official Gazette*;

(C) the "Drawing Fig. For Certificate and For O.G." box — to be sure that an appropriate drawing

figure is indicated for printing on the certificate cover sheet and in the *Official Gazette*;

(D) the "Litigation Review" box — to be sure that the Office is aware of prior or concurrent litigation;

(E) the face of the file — to be sure that the necessary data is included thereon;

(F) the "Index of Claims" box — to be sure the status of each claim is indicated and the final claim numbers are indicated; and

(G) the bibliographic data sheet reprint - to be sure that the data included thereon is correct, and the blank spaces have been initialed.

The claims or claims should be selected in accordance with the following instructions:

(A) The broadest claim should be selected;

(B) Examiners should ordinarily designate but one claim on each invention, although when a plurality of inventions are claimed in one application, additional claims up to a maximum of five may be designated for publication. In the case of reexamination, the examiner must select only one claim;

(C) A dependent claim should not be selected unless the independent claim from which it depends is also printed. In the case where a multiple dependent claim is selected, the entire chain of claims for one embodiment should be listed. In the case of reexamination, a dependent patent claim may be selected where the independent original patent claim has been canceled; in such a case, the dependent claim would be printed while the independent claim would not be printed; and

(D) In reissue applications, the broadest claim with changes or the broadest additional reissue claim should be selected for printing.

When recording this information in the box provided, the following items should be kept in mind:

(A) Write the claim number clearly in black ink;

(B) If multiple claims are selected, the claim numbers should be separated by commas; and

(C) The claim designated must be referred to by using the renumbered patent claim number rather than the original application claim number.

The examiner must in all cases either fill out (A) the Issuing Classification portion on the face of the reexamination file wrapper where such portion is contained on the face of the file wrapper, or (B) a blue issue slip form PTO-270 or design issue slip form PTO-328 if no Issuing Classification portion is contained on the face of the reexamination file wrapper. The current international classification and U.S. classification must be inserted for both the original classification and all cross-references. Completion of the Issuing Classification portion on the face of the reexamination file wrapper or the issue slip is required, even if all of the claims are canceled.

If any new cross-references are added, the examiner must order a copy of the patent by using form PTO-14B and place the copy in the search file so that the certificate may be attached thereto when it issues. The form PTO-14B should separately be forwarded by the Technology Center (TC) to the appropriate location and should <u>not</u> be attached to the checklist (PTO-1516) or otherwise included in the file when the file is forwarded by the TC to the Office of Patent Legal Administration (OPLA) for review pursuant to MPEP § 2289.

If the patent owner desires the names of the attorneys or agents to be printed on the certificate, a separate paper limited to this issue which lists the names and positively states that they should be printed on the certificate must be filed. A mere power of attorney or change of address is not a request that the name appear on the certificate.

If a proper paper has been submitted by the patent owner indicating the names of the attorneys or agents to be published on the certificate, that paper should be physically placed on top of the other papers in the center of the reexamination file at the conclusion of the proceedings.

The examiner must also complete a checklist, form PTO-1516, for the reexamination file which will be forwarded to the Office of Publications identifying:

(A) Any amendments to the abstract and description;

(B) Any amendments to the drawings;

(C) Any terminal disclaimer or dedication filed during reexamination;

(D) Any certificate(s) of correction to the patent;

(E) The patentability of claim(s)____ (and) ____ is confirmed;

(F) Claim(s) _____ (and) ____ was (were) previously canceled. (Relates to a prior proceeding);

(G) Claim(s) _____ (and) ____ was (were) previously disclaimed;

(H) Claim(s) _____ (and) ____ is (are) now disclaimed;

(I) Claim(s) _____ (and) ____, having been finally determined to be unpatentable, is (are) canceled;

(J) Claim(s) _____ (and) ____ is (are) determined to be patentable as amended. (Note: these claim(s) to be printed on certificate.);

(K) Claim(s) _____ (and) ____, dependent on an amended claim, is (are) determined to be patentable. (Note: to be used for claims which are not amended. Amended claims must be listed in J above);

(L) New claim(s) _____ (and) ____ is (are) added and determined to be patentable. (Note: these claim(s) to be printed on certificate.);

(M)Claim(s) _____ (and) ____ was (were) not reexamined;

(N) Other (identify claims and status) _____ ; and

(O) Any decision of the U.S. Patent and Trademark Office, federal court or other forum which may affect the validity of the patent but which have not been considered during reexamination.

A clean copy of the patent being reexamined should also be provided to be forwarded out of the TC with the file. The clean copy of the patent can be obtained from the TC printer for printing copies of patents; the copy of the printed patent found in the patent file should not be used as the "clean copy" to be placed in the reexamination file. The examiner should inspect the title report in the file (usually paper two or three). If the title report indicates a title in the inventors, but the patent copy shows an assignment to an assignee, a telephone call can be made to the patent owner, and the patent owner can be asked to submit a statement under 37 CFR 3.73(b) indicating that title is in the assignee (i.e., it has not reverted back to the inventors). See MPEP § 320.

After the examiner has prepared the NIRC and attachments for mailing, completed the review and preparation of the case as discussed above, and completed the Examiner Checklist form PTOL-1516, the reexamination and patent files will be given to the reexamination clerk. The reexamination clerk will complete the Reexamination Clerk Checklist form PTO-1517. The reexamination clerk will revise and update the files. The clerk should check to see if any changes in especially:

(A) the title;

(B) the inventor;

(C) the assignee;

(D) the continuing data;

(E) the foreign priority;

(F) the address of the owner's attorney; and

(G) the requester's address

have been properly entered on the face of the reexamination and patent files and properly entered in the PALM data base. After the clerk has finished his/her processing, he or she will forward the reexamination file, the patent file, the clean copy of the patent, the Examiner Checklist-Reexamination PTO-1516, and the Reexamination Clerk Checklist PTO-1517 to the TC Special Program Examiner for review. After approval by the TC Special Program Examiner, the reexamination clerk will mail the NIRC with attachments and forward the reexamination file with the patent file to the OPLA (see MPEP § 2289), which will ultimately forward same to the Office of Publications for printing.

REEXAMINATION PROCEEDINGS IN WHICH ALL THE CLAIMS ARE CANCELED

There will be instances where all claims in the reexamination proceeding are to be canceled, and a NIRC will be issued indicating that fact. This would occur where the patent owner fails to timely respond to an Office action, and all live claims in the reexamination proceeding are under rejection. It would also occur where all live claims in the reexamination proceeding are to be canceled as a result of a Board decision affirming the examiner, and the time for appeal to the court and for requesting reconsideration or modification has expired.

Prior to canceling the claims and issuing the NIRC, the examiner should telephone the patent owner to inquire if a timely response, timely appeal, etc., was filed with the Office so as to make certain that a timely response has not been misdirected within the Office. Where the patent owner indicates that no such filing was made, or where the patent owner cannot be

reached, the examiner will proceed to issue a NIRC terminating prosecution.

As an attachment to the NIRC, the examiner will draft an examiner's amendment canceling all live claims in the reexamination proceeding. In the examiner's amendment, the examiner should point out why the claims have been canceled. For example, the examiner might make one of the two following statements, as appropriate:

> "Claims 1-5 and 6-8 were subject to rejection in the last Office action mailed 9/9/99. Patent owner failed to timely respond to that Office action. Accordingly claims 1-5 and 6-8 have been canceled. See 37 CFR 1.550(d) and MPEP § 2266."

> "The rejection of claims 1-5 and 6-8 has been affirmed in the Board decision of 9/9/99, and no timely appeal to the court has been filed. Accordingly claims 1-5 and 6-8 have been canceled."

If the patent owner was reached by telephone and indicated that there was no timely filing (as discussed above), the attachment to the NIRC will make the telephone interview of record.

In order to cancel the live claims, brackets should be placed around all the live claims. All other claims in the proceeding should have previously been either replaced or canceled.

The examiner will designate a cancelled original patent claim, to be printed in the *Official Gazette*, on the file wrapper in the appropriate place for the claim chosen.

REEXAMINATION REMINDERS

The following items deserve special attention. The examiner should ensure they have been correctly completed or followed before passing the case for issue.

(A) All patent claims must be examined. See MPEP § 2243.

(B) No renumbering of patent claims is permitted. New claims may require renumbering. See MPEP § 2250.

(C) All amendments to the description and claims must conform to requirements of 37 CFR 1.530(d)-(j). This includes any changes made by Examiner's Amendment. If a portion of the text is amended more than once, each amendment should indicate all of the changes (insertions and deletions) in relation to the current text in the patent under reexamination. See MPEP § 2250.

(D) The prior art must be listed on a PTO-892 or PTO-1449 form. These forms must be properly completed. See MPEP § 2257.

(E) The examiner and reexamination clerk checklists PTO-1516 and PTO-1517 must be *entirely* and *properly* completed. A careful reading of the instructions contained in these checklists is essential. The clerical checklist is designed as a check and review of the examiner's responses on the examiner checklist. Accordingly, the reexamination clerk should personally review the file before completing an item. The reexamination clerk should check to make certain that the responses to all related items on both checklists are in agreement.

(F) Multiple pending reexamination proceedings must be merged. See MPEP § 2283.

(G) Reasons for patentability and/or confirmation are required for each claim found patentable. See below.

(H) There is no issue fee in reexamination. See MPEP § 2233.

(I) The patent claims may not be amended nor new claims added after expiration of the patent. See MPEP § 2250.

(J) Original drawings cannot be physically changed. All drawing amendments must be presented on new sheets. The examiner may have the draftsperson review the new sheets of drawings if the examiner would like the draftsperson's assistance in identifying errors in the drawings. A draftsperson's "stamp" to indicate approval is no longer required on patent drawings, and these stamps are no longer to be used by draftspersons. See MPEP § 2250.01.

(K) An amended or new claim may not enlarge the scope of the patent claims. See MPEP § 2250.

EXAMINER'S AMENDMENT

Where it is necessary to amend the patent in order to place the proceeding in condition to issuance of a reexamination certificate, the examiner may request that the patent owner provide the amendment(s), or the examiner may make the amendments, with the patent owner's approval, by a formal examiner's amendment. If the changes are made by an examiner's amendment, the examiner's amendment must comply with the requirements of 37 CFR 1.530(d)-(j) in

amending the patent. Thus, the examiner's amendment requires presentation of the full text of any paragraph or claim to be changed, with the 37 CFR 1.530(f) markings. The exception for examiner's amendments set forth in 37 CFR 1.121(g) does not apply to examiner's amendments in reexamination proceedings. See MPEP § 2250.

Where an examiner's amendment is prepared, Box 7 of form PTOL-469 (Notice of Intent to Issue Reexamination Certificate) is checked, and form paragraph 22.06 is used to provide the appropriate attachments.

¶ 22.06 Examiner's Amendment Accompanying Notice of Intent To Issue Reexamination Certificate

An examiner's amendment to the record appears below. The changes made by this examiner's amendment will be reflected in the reexamination certificate to issue in due course.

[1]

REASONS FOR PATENTABILITY AND/OR CONFIRMATION

Reasons for patentability must be provided, unless all claims are canceled in the proceeding. Box 2 of form PTOL-469 is checked, and the reasons are provided as an attachment. In the attachment to the NIRC, the examiner should indicate why the claims found patentable in the reexamination proceeding are clearly patentable over the cited patents or printed publications. This is done in a manner similar to that used to indicate reasons for allowance in an application. See MPEP § 1302.14. Where the record is clear as to why a claim is patentable, the examiner may refer to the particular portions of the record which clearly establish the patentability of that claim.

The reasons for patentability are set forth on form PTOL-476, entitled "REASONS FOR PATENTABILITY AND/OR CONFIRMATION." Original patent claims found patentable are designated as "confirmed" claims, while new claims and amended patent claims are designated as "patentable" claims. However, in setting forth reasons, the examiner may use "patentable" to refer to any claim that defines over the cited patents or printed publications. There is no need to separate the claims into "confirmed" and "patentable" categories.

As an alternative to form PTOL-476, the examiner may use form paragraph 22.16.

¶ 22.16 Reasons For Patentability and/or Confirmation

STATEMENT OF REASONS FOR PATENTABILITY AND/OR CONFIRMATION

The following is an examiner's statement of reasons for patentability and/or confirmation of the claims found patentable in this reexamination proceeding: [1]

Any comments considered necessary by PATENT OWNER regarding the above statement must be submitted promptly to avoid processing delays. Such submission by the patent owner should be labeled: "Comments on Statement of Reasons for Patentability and/or Confirmation" and will be placed in the reexamination file.

Examiner Note:

This form paragraph may be used as an attachment to the Notice of Intent to Issue Reexamination Certificate, PTOL-469 (item number 2).

Obviously, where all claims are canceled in the proceeding, no reasons for patentability are provided.

2288 Issuance of Reexamination Certificate

35 U.S.C. 307. Certificate of patentability, unpatentability, and claim cancellation.

(a) In a reexamination proceeding under this chapter, when the time for appeal has expired or any appeal proceeding has terminated, the Director will issue and publish a certificate canceling any claim of the patent finally determined to be unpatentable, confirming any claim of the patent determined to be patentable, and incorporating in the patent any proposed amended or new claim determined to be patentable.

*****

37 CFR 1.570. Issuance of ex parte reexamination certificate after ex parte reexamination proceedings.

(a) Upon the conclusion of *ex parte* reexamination proceedings, the Commissioner will issue an *ex parte* reexamination certificate in accordance with 35 U.S.C. 307 setting forth the results of the *ex parte* reexamination proceeding and the content of the patent following the *ex parte* reexamination proceeding.

(b) An *ex parte* reexamination certificate will be issued in each patent in which an *ex parte* reexamination proceeding has been ordered under § 1.525 and has not been merged with any *inter partes* reexamination proceeding pursuant to § 1.989(a). Any statutory disclaimer filed by the patent owner will be made part of the *ex parte* reexamination certificate.

(c) The *ex parte* reexamination certificate will be mailed on the day of its date to the patent owner at the address as provided for in § 1.33(c). A copy of the *ex parte* reexamination certificate will also be mailed to the requester of the *ex parte* reexamination proceeding.

(d) If an *ex parte* reexamination certificate has been issued which cancels all of the claims of the patent, no further Office proceedings will be conducted with that patent or any reissue applications or any reexamination requests relating thereto.

(e) If the *ex parte* reexamination proceeding is terminated by the grant of a reissued patent as provided in § 1.565(d), the reissued patent will constitute the *ex parte* reexamination certificate required by this section and 35 U.S.C. 307.

(f) A notice of the issuance of each *ex parte* reexamination certificate under this section will be published in the *Official Gazette* on its date of issuance.

Since abandonment is not possible in a reexamination proceeding, a reexamination certificate will be issued at the conclusion of the proceeding in each patent in which a reexamination proceeding has been ordered under 37 CFR 1.525 except where the reexamination has been terminated by the grant of a reissue patent on the same patent.

Where the reexamination is terminated for a failure to timely respond to an Office action, see MPEP § 2266.

The reexamination certificate will set forth the results of the proceeding and the content of the patent following the reexamination proceeding. The certificate will:

(A) cancel any claims determined to be unpatentable;

(B) confirm any patent claims determined to be patentable;

(C) incorporate into the patent any amended or new claims determined to be patentable;

(D) make any changes in the description approved during reexamination;

(E) include any statutory disclaimer filed by the patent owner;

(F) refer to unamended claims which were held invalid on final holding by another forum on grounds not based on patents or printed publications;

(G) refer to any patent claims not reexamined;

(H) be mailed on the day it is dated to the patent owner at the address provided for in 37 CFR 1.33(c) and a copy will be mailed to the third party requester; and

(I) refer to patent claims, dependent on amended claims, determined to be patentable.

If a certificate issues which cancels all of the claims of the patent, no further Office proceedings will be conducted with regard to that patent or any reissue application or reexamination request directed thereto. See 37 CFR 1.570(d).

If a reexamination proceeding is terminated by the grant of a reissued patent as provided for in 37 CFR 1.565(b), the reissued patent will constitute the reexamination certificate required by 35 U.S.C. 307 and this section. See 37 CFR 1.570(e).

A notice of the issuance of each reexamination certificate will be published in the *Official Gazette* on its date of issuance in a format similar to that used for reissue patents. See 37 CFR 1.570(f) and MPEP § 2291.

2289 Reexamination Review

All reexamination cases are monitored and reviewed in the Technology Center (TC) by the Office of the TC Special Program Examiner (includes SPRE, paralegal or other technical support who might be assigned as backup) at several stages during the prosecution. In order to ensure that SPREs are aware of the reexamination cases in their TCs, a pair of terminal-specific PALM flags have been created which must be set by the SPRE before certain PALM transactions can be completed. First, when a new reexamination request enters the TC, a SPRE must set a PALM flag before a docketing transaction will be accepted. By having to set this first flag, the SPRE is made aware of the assignment of the reexamination case to the TC and can take steps, as may be appropriate, to instruct the examiner on reexamination-specific procedures before the determination process begins, as well as throughout the period that the examiner is handling the proceeding. Second, the SPRE must set a second PALM flag before the reexamination file can be given a reexamination terminated status and sent to the Office of Publications, thereby ensuring that the SPRE is informed when the reexamination case is being processed for Notice of Intent to Issue Reexamination Certificate (NIRC) so the SPRE may be able to conduct a final review of the file, if appropriate.

After leaving the TCs, all reexamination cases go through a screening process currently performed in the Office of Patent Legal Administration (OPLA) for obvious errors and proper preparation in order to issue a reexamination certificate. A patentability review is made in a sample of reexamination cases by the Office of Quality Review. The screening process and the patentability review are appropriate vehicles for correcting errors, identifying problem areas and recognizing trends, providing information on the uniformity of practice, and providing feedback to the TCs.

2290 Format of Certificate

The reexamination certificate is formatted much the same as the title page of current U.S. patents. The certificate is titled "Reexamination Certificate" and includes the patent number of the original patent preceded by the "kind code" letter "B" and the number of the reexamination proceeding of that patent, or the patent number of the original patent followed by the "kind code" letter "C" and the number of the reexamination proceeding of that patent. The "kind code" designation "B" was used on reexamination certificates published prior to January 2, 2001, and the "kind code" designation "C" appears on reexamination certificates published on or after January 2, 2001. Thus, a first reexamination certificate for a patent includes the designation "B1" or "C1" in addition to the patent number, and a second reexamination certificate for the same patent includes the designation "B2" or "C2" in addition to the patent number.

Since January 2, 2001, the "kind code" designation "B" has been used to designate patents, and it is no longer used on reexamination certificates. See MPEP § 901.04(a) for a complete list of the kind codes used by the United States Patent and Trademark Office.

The certificate denotes the date the certificate was issued at INID code [45] (see MPEP § 901.04). The title, name of inventor, international and U.S. classification, the abstract, and the list of prior art documents appear at their respective INID code designations, much the same as is presently done in utility patents.

The primary differences, other than as indicated above, are:

(A) the filing date and number of the request is preceded by "Reexamination Request;"

(B) the patent for which the certification is now issued is identified under the heading "Reexamination Certificate for"; and

(C) the prior art documents cited at INID code [56] will be only those which are part of the reexamination file and cited on forms PTO-1449 (and have not been crossed out because they were not considered) and PTO-892.

Finally, the certificate will specify the claims which were confirmed as patentable and the claims which were canceled. Any new claims will be printed in the certificate completely in italics, and any amended claims will be printed in the certificate with italics and bracketing indicating the amendments thereto. Any prior court decisions will be identified, as well as the citation of the court decisions.

REEXAMINATION CERTIFICATE (24th)

United States Patent [19] [11] **B1 4,182,460**

Holk, Jr. et al. [45] Certificate Issued **Oct. 19, 1982**

[54] **LEVER ACTION TAB SYSTEM FOR EASY OPENING ENDS**

[75] Inventors: Albert J. Holk, Jr., Frankfort; Arnold R. Boik, Chicago, both of Ill.

[73] Assignee: The Continental Group, Inc., New York, N.Y.

Reexamination Request

No. 90/000,076, Sep. 28, 1981

Reexamination Certificate for:

Patent No.:	4,182,460
Issued:	Jan. 8, 1980
Appl. No.:	656,388
Filed:	Jul. 27, 1967

[51] Int. Cl [3] B65D 41/32

[52] U.S. Cl 220/271; 220/273

[58] Field of Search 220/265-273

[56] **References Cited**

U.S. PATENT DOCUMENTS

2,772,808	12/1956	Fried.
3,089,609	5/1963	D'Andrea.
3,416,699	12/1968	Bozek.

Primary Examiner—George T. Hall

[57] **ABSTRACT**

This disclosure has to do with an easy opening container end wherein substantially the entire end panel is removed. The removable panel portion has rigidly attached thereto a pull tab which is first utilized as a lever to obtain the initial rupture of the end panel and then as a handle to tear out the removable panel portion. The removable panel portion is provided with a weakening line immediately adjacent the connection between the pull tab and the removable panel portion for the purpose of first venting the interior of a container and then forming a hinge which will permit the necessary pivoting of the pull tab relative to the end panel.

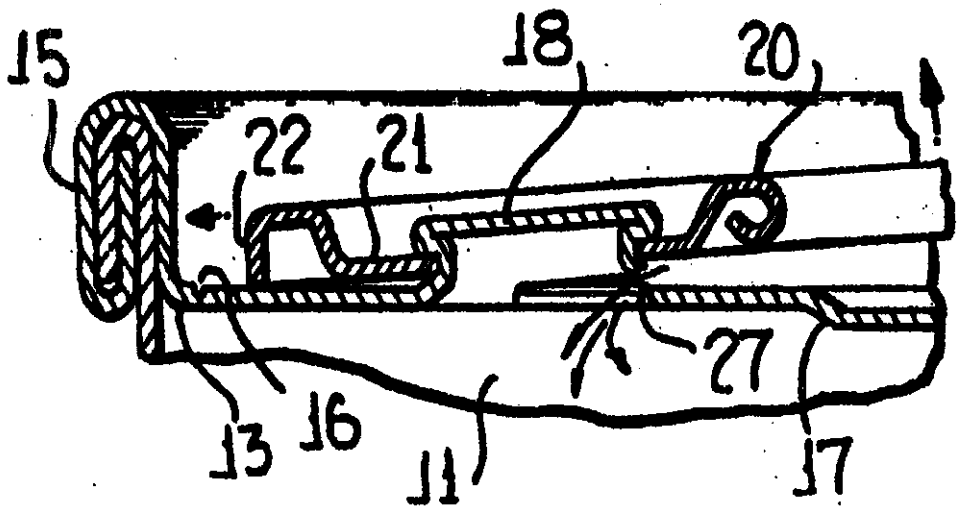

B1 4,182,460

1

REEXAMINATION CERTIFICATE ISSUED UNDER 35 U.S.C. 307.

THE PATENT IS HEREBY AMENDED AS INDICATED BELOW.

Matter enclosed in heavy brackets appeared in the patent, but has been deleted and is no longer a part of the patent; matter printed in italics indicates additions made to the patent.

AS A RESULT OF REEXAMINATION, IT HAS BEEN DETERMINED THAT:

The patentability of claims 1–10, 16, 18, 19 and 21–54 is confirmed.

Claims 11–15, 17 and 20 are determined to be patentable as amended:

11. In a container end including an end panel defined by an upstanding chuck wall, a [weakening] *score* line formed in said end panel and defining a removable panel portion, said [weakening] *score* line including a starting portion disposed closely adjacent said chuck wall, a pull tab having a nose for engaging said panel along said [weakening] *score* line starting portion for effecting the ruputre of said panel in the removal of said panel portion, and securing means securing said pull tab to said panel; the improvement comprising said securing means rigidly securing said pull tab to said panel portion and including hinge forming means in said removable panel portion for facilitating the hinging of said pull tab relative to said end panel to rupture said end panel along said [weakening] *score* line starting portion.

12. The container end of claim 11 wherein said hinge forming means includes a generally U-shaped [weakening] *score* line opening towards said [weakening] *score* line starting portion.

13. The container end of claim 11 wherein said hinge forming means includes a generally U-shaped [weakening] *score* line opening towards said [weakening] *score* line starting portion and having terminal

2

ends directed away from said [weakening] *score* line starting portion for preventing the accidental tearing out of a narrow portion only of said removable panel portion between said [weakening] *score* lines.

14. The container end of claim 11 wherein said *score* line [of weakening] includes a generally U-shaped central portion and diverging adjacent portions.

15. The assembly of claim 1 wherein said removable panel portion is defined by a second *score* line [of weakening] formed separate and apart from the first-mentioned *score* line [of weakening], and said *score* lines [of weakening] define an intermediate strap-like hinge strip.

17. In a container, the combination of:

a container wall of sheet material;

a first *score* line [of weakness] in said container wall defining a tear strip manually removable therefrom;

a second *score* line [of weakness] in said container wall adjacent said first *score* line [of weakness] and defining a hinge, said hinge being spaced from said first *score* line [of weakness] by a portion of said tear strip;

a *separate* tab lying at least partialy within the area of said tear strip, said tab having a handle end and a force applying end with the force applying end lying at a preselected location closely adjacent said first *score* line [of weakness]; and

means integral with said tear strip for securing said tab to said tear strip, movement of said handle end of said tab urging said force applying end firmly against said container wall to cause hinged movement of said portion of said container wall about said hinge to initiate severance of the tear strip along said first *score* line [of weakness].

20. A combination as defined in claim 18 wherein said hinge lies intermediate said last mentioned means and said first *score* line [of weakness] and said preselected location is on said tear strip.

* * * * *

US005506049C1

(12) **REEXAMINATION CERTIFICATE** (4368th)

United States Patent

Swei et al.

(10) **Number: US 5,506,049 C1**

(45) **Certificate Issued: May 29, 2001**

(54) **PARTICULATE FILLED COMPOSITE FILM AND METHOD OF MAKING SAME**

(75) Inventors: **Gwo S. Swei**, Northboro; **David J. Arthur**, Norwood, both of MA (US)

(73) Assignee: **World Properties, Inc.**, Lincolnwood, IL (US)

Reexamination Request:
No. 90/005,295, Mar. 16, 1999

Reexamination Certificate for:

Patent No.:	**5,506,049**
Issued:	**Apr. 9, 1996**
Appl. No.:	**08/177,198**
Filed:	**Dec. 30, 1993**

(*) Notice: This patent is subject to a terminal disclaimer.

Related U.S. Application Data

(62) Division of application No. 07/705,624, filed on May 24, 1991, now abandoned.

(51) **Int. Cl.**[7] **B32B 5/16**

(52) **U.S. Cl.** **428/323**; 428/325; 428/335; 428/901

(58) **Field of Search** 428/323, 325, 428/335, 403, 404, 901, 405, 406, 421, 422, 457

(56) **References Cited**

U.S. PATENT DOCUMENTS

Re. 30,450	12/1980	Iannicelli .
2,539,329	1/1951	Sanders .
2,739,073	3/1956	Bertorelli .
2,832,754	4/1958	Jex et al. .
2,843,502	7/1958	Fay, Jr. .
2,848,346	8/1958	Bertorelli .
2,930,809	3/1960	Jex et al. .
2,945,831	7/1960	Evans et al. .
2,980,965	4/1961	Infantino et al. .
3,290,165	12/1966	Iannicelli .

(List continued on next page.)

FOREIGN PATENT DOCUMENTS

0198375	5/1987	(EP) .
0 598 464	5/1994	(EP) .
1119260	7/1968	(GB) .
2071112	4/1984	(GB) .
6-263464	9/1994	(JP) .
WO 90/02102	3/1990	(WO) .
WO 95/07177	3/1995	(WO) .

OTHER PUBLICATIONS

"Production Refinement of Very Thin Teflon Film", American Machine and Foundry Co, Stamford, CT, Mar., 1963.

"Silane Coupling Agents", Edwin P. Plueddemann, Dow Corning Corporation, Midland, Michigan, Plenum Press, New York, 1982.

(List continued on next page.)

Primary Examiner—H. Thi Le

(57) **ABSTRACT**

A particulate filled fluoropolymeric matrix composite article and method of making the same is presented. Preferably, the article comprises an electrical substrate material. The method for making the particulate filled polymeric matrix composite film includes mixing a polymeric matrix material with a dispersion of particulate filler in a carrier liquid to form a casting composition and adjusting the viscosity of the casting composition to retard separation of the particulate filler from the composition. A layer of the viscosity-adjusted casting composition is cast on a substrate and the layer is consolidated to form the particulate filled polymer matrix composite film. Films made by the method include very thin, e.g. less than 1.0 mil, fluoropolymeric matrix films highly filled with very small diameter, preferably spherical, particles for use as, e.g. dielectric substrate materials in laminar electrical circuits.

US 5,506,049 C1
Page 2

U.S. PATENT DOCUMENTS

3,340,222	9/1967	Fang .	
3,489,595	1/1970	Brown, Jr. .	
3,518,332	6/1970	Sklarchuk et al. .	
3,556,161	1/1971	Roberts .	
3,655,604	4/1972	Strolle .	
3,780,156	12/1973	Cameron .	
3,801,427	4/1974	Morishita et al. .	
3,830,770	8/1974	Ribbans, III .	
3,838,998	10/1974	Matthews et al. .	
3,886,103	5/1975	Koizumi et al. .	
3,896,071	7/1975	Poirier .	
3,928,703	12/1975	Cook .	
3,929,721	12/1975	Leverett .	
3,970,627	7/1976	Seymus .	
4,036,807	7/1977	Atherton .	
4,038,244	7/1977	Ogden et al. .	
4,039,713	8/1977	Vassiliou .	
4,118,537	10/1978	Vary et al. .	
4,123,401	10/1978	Berghmans et al. .	
4,128,519	12/1978	Bartoszek et al. .	
4,134,848	1/1979	Adicoff .	
4,141,873	2/1979	Dohany .	
4,143,110	3/1979	Morozumi et al. .	
4,151,154	4/1979	Berger .	
4,169,087	9/1979	Richter .	
4,179,542	12/1979	Christofas et al. .	
4,183,991	1/1980	Smiley et al. .	
4,194,040	3/1980	Breton et al. .	
4,214,914	7/1980	Ivanchev et al. .	
4,216,024	8/1980	Ivanchev et al. .	
4,233,366	11/1980	Sample, Jr. et al. .	
4,309,328	1/1982	Carson et al. .	
4,333,857	6/1982	Lim et al. .	
4,335,180	6/1982	Traut .	
4,352,717	10/1982	Watanabe et al. .	
4,391,930	7/1983	Olson .	
4,440,879	4/1984	Kawachi et al. .	
4,469,747	9/1984	Sasaki et al. .	
4,495,247	1/1985	Vasta .	
4,529,774	7/1985	Evans et al. .	
4,546,144	10/1985	Knight .	
4,556,603	12/1985	Thorsrud .	
4,587,286	5/1986	Wilkinson .	
4,623,390	11/1986	Delmonico .	
4,649,037	3/1987	Marsh et al. .	
4,654,235	3/1987	Effenberger et al. .	
4,661,137	4/1987	Garnier et al.	65/21.4
4,665,113	5/1987	Eberl .	
4,715,878	12/1987	Kopatz et al.	65/21.1
4,756,980	7/1988	Niksa et al. .	
4,772,322	9/1988	Bellis et al. .	
4,788,764	12/1988	Niksa et al. .	
4,824,511	4/1989	Hartman et al. .	
4,868,350	9/1989	Hoffarth et al. .	
4,879,345	11/1989	Connelly et al. .	
4,923,520	5/1990	Anzai et al. .	
4,985,190	1/1991	Ishikawa et al. .	
5,055,342	10/1991	Markovich .	
5,069,702	12/1991	Block et al. .	
5,071,635	12/1991	Yamanaka et al.	423/592
5,075,065	12/1991	Effenberger et al. .	
5,126,192	6/1992	Chellis .	
5,256,180	10/1993	Garnier et al. .	
5,280,414	1/1994	Davis et al. .	
5,421,507	6/1995	Davis et al. .	
5,496,403	3/1996	Gaedcke et al. .	
5,534,348	7/1996	Miller et al.	65/21.4

OTHER PUBLICATIONS

"A Guide to Dow Corning Silane Coupling Agents", Dow Corning Corporation, 1985.

"Silane Coupling Agents in Mineral–Filled Composites", Union Carbide Corporation, 1973, 1979.

"Silane Adhesion Promoters in Mineral–Filled Composites", Union Carbide Corporation, 1973.

"Handbook of Fillers and Reinforcements for Plastics", Van Nostrand Reinhold Company, 1978.

"The Use of Mixed Silane Coupling Agents", Edwin P. Plueddemann and Peter G. Pape, 40th Annual Conference, Reinforced Plastics/Composites Institute, The Society of the Plastics Industry, Inc. Jan. 28–Feb. 1, 1985, Session 17–F, pp. 1–4.

"Microwave Substrates—Present and Future", Thomas E. Nowicki, *New Electronics*, May 27, 1980, pp. 85–88.

MIL–P 13949F, Military Specification, Plastic Sheet, Laminated, Metal Clad (For Printed Wiring Boards), General Secification For (Mar, 10, 1981)(superseding MIL–P 13949E (Jul. 15, 1971), MIL–P–55636B (Sep. 10, 1976), and MIL–P –55617B (Sep. 10, 1976).

Murray Olyphant, Jr. & Thomas E. Nowicki, "Microwave Substrates Support MIC Technology", in *Microwave Tech Topics*, also published in *Microwaves Magazine*, Nov./Dec. 1980.

Ex. 1—World Properties, Inc. & Rogers Corp. v. Tonoga Limited D/B/A Taconic Plastics—3:98CV1218 (JBA), Ruling On Defendant's Motion To Compel Return Of Inadvertently Produced Privileged Documents dated May 30, 2000.

Ex. 2—Letter dated Aug. 25, 1998 from John C. Hilton at McCormick, Paulding & Huber LLP to Mr. Andrew Russell.

Ex. 3—World Properties et al v. Tonoga, et al—3:98cv1218 (JBA), Endorsement Order [Doc. #76, #80] dated Jul. 5, 2000.

Ex. 4—World Properties, et al v. Tonoga, et al—3:98cv1218 (JBA), portion of Deposition of Malcolm Green transcript on Nov. 19, 1998.

Ex. 5—World Properties, et al v. Tonoga, et al—3:98cv1218 (JBA), Declaration of Thomas McCarthy dated May 10, 2000.

Ex. 6—World Properties, et al v. Tonoga, et al—3:98cv1218 (JBA), Order Returning Pleading dated Jul. 7, 2000.

Ex. 7—World Properties et al v. Tonoga, et al—3:98cv1218 (JBA), Amended Answer And Counterclaim dated Jun. 1, 2000.

US 5,506,049 C1

1

REEXAMINATION CERTIFICATE ISSUED UNDER 35 U.S.C. 307

THE PATENT IS HEREBY AMENDED AS INDICATED BELOW.

Matter enclosed in heavy brackets [ ] appeared in the patent, but has been deleted and is no longer a part of the patent; matter printed in italics indicates additions made to the patent.

AS A RESULT OF REEXAMINATION, IT HAS BEEN DETERMINED THAT:

Claims **1–40** are cancelled.

New claims **41–53** are added and determined to be patentable.

41. A particulate filled fluoropolymeric matrix composite circuit material, comprising:

(1) an electric substrate including a nonfibrillated fluoropolymer matrix and about 15 to about 95 volume percent filler particles distributed throughout the matrix, said particles having a maximum equivalent spherical diameter of less than about 10 μm, said filler particles comprising inorganic filler particles treated with a coating selected from the group consisting of silane coatings, zirconate coatings, and titanate coatings;

(2) a layer of metal being disposed on at least one surface of said substrate; and

(3) said substrate being formed by a casting composition, wherein the viscosity of said casting composition is adjusted by a polymeric viscosity modifier to adjust the viscosity of the casting composition to retard separation of the particulate filler from the composition to provide a stabilized, homogeneous casting composition, said polymeric viscosity modifier being substantially removed after the completion of processing, and wherein a surfactant is added to said casting composition to modify the surface tension of the carrier liquid so that the carrier liquid wets the filler particles.

2

42. The circuit material of claim 41, wherein the fluoropolymer comprises polytetrafluoroethylene.

43. The circuit material of claim 41, wherein the fluoropolymer comprises polychlorotrifluoroethylene.

44. The circuit material of claim 41, wherein the fluoropolymer comprises a copolymer of tetrafluoroethylene and a monomer selected from the group consisting of hexafluoropropylene and perfluoroalkylvinyethers.

45. The circuit material of claim 41, wherein the fluoropolymer comprises a copolymer of tetrafluoroethylene and a monomer selected from the group consisting of vinylideneflouride, vinyl fluoride and ethylene.

46. The circuit material of claim 41, wherein the fluoropolymer comprises a copolymer of chlorotrifluoroethylene and a monomer selected from the group consisting of hexafluoropropylene, perfluoroalkylvinylethers, vinylidenefluoride, vinyl fluoride, and ethylene.

47. The circuit material of claim 41, wherein the substrate comprises a film having a thickness of less than about 2 mil.

48. The circuit material of claim 41, wherein the substrate comprises a film having a thickness of less than about 1 mil.

49. The circuit material of claim 41 wherein said metal comprises copper.

50. The circuit material of claim 41, wherein each of the filler particles has an equivalent spherical diameter of less than 5 μm.

51. The circuit material of claim 41, wherein none of the filler particles has a single linear dimension greater than 10 μm.

52. The circuit material of claim 41, wherein none of the filler particles has a single linear dimension greater than 5 μm.

53. The circuit material of claim 41, wherein all of the filler particles are of substantially the same particle size.

* * * * *

2291 Notice of Certificate Issuance in *Official Gazette*

The *Official Gazette* notice will include bibliographic information, and an indication of the status of each claim after the termination of the reexamination proceeding. Additionally, a representative claim will be published along with an indication of any changes to the specification or drawing.

2292 Distribution of Certificate

A copy of the reexamination certificate should be stapled to each copy of the patent in the search files. A copy of the certificate will also be made a part of any patent copies prepared by the Office subsequent to the issuance of the certificate.

A copy of the certificate will also be forwarded to all depository libraries and to those foreign offices which have an exchange agreement with the U.S. Patent and Trademark Office.

2293 Intervening Rights

35 U.S.C. 307. Certificate of patentability, unpatentability, and claim cancellation.

*****

(b) Any proposed amended or new claim determined to be patentable and incorporated into a patent following a reexamination proceeding will have the same effect as that specified in section 252 of this title for reissued patents on the right of any person who made, purchased, or used within the United States, or imported into the United States, anything patented by such proposed amended or new claim, or who made substantial preparation for the same, prior to issuance of a certificate under the provisions of subsection (a) of this section.

The situation of intervening rights resulting from reexamination proceedings parallels the intervening rights situation resulting from reissue proceedings, and the rights detailed in 35 U.S.C. 252 apply equally in reexamination and reissue situations. See *Fortel Corp. v. Phone-Mate, Inc.*, 825 F.2d 1577, 3 USPQ2d 1771 (Fed. Cir. 1987); *Kaufman Co., Inc. v. Lantech, Inc.*, 807 F.2d 970, 1 USPQ2d 1202 (Fed. Cir. 1986); *Tennant Co. v. Hako Minuteman, Inc.*, 4 USPQ2d 1167 (N.D. Ill. 1987); *Key Mfg. Group, Inc. v. Microdot, Inc.*, 679 F. Supp. 648, 4 USPQ2d 1687 (E.D. Mich. 1987).

2294 Terminated Reexamination Files

Terminated reexamination files in which reexamination has been denied should be forwarded to the Files Repository (Location Code 9200) for storage with the patent file.

The files sent to the Files Repository must have either (A) a certificate date and number (i.e., a Reexamination Certificate has issued), or (B) the word "Terminated" written in green ink on the face of the file at the top between the word "Reexam" and the patent number. The reexamination clerk in each Technology Center (TC) should make sure that an appropriate refund has been made before the word "Terminated" is placed on the file, and the files sent to the Files Repository.

2295 Reexamination of a Reexamination

This section provides guidance for the processing and examination of a reexamination request filed on a patent for which a reexamination certificate has already issued. This reexamination request is generally referred to as a "Reexamination of a reexamination."

The reexamination request is to be considered based on the claims in the patent *as modified by the previously issued reexamination certificate*, and not based on the original claims of the patent. Accordingly, when the file for the new reexamination proceeding (reexamination of a reexamination) is first received by the Technology Center (TC), the reexamination clerk will promptly incorporate into the reexamination specification all of the changes to the patent made by the issued reexamination certificate. Such incorporation must be done prior to forwarding the proceeding to the examiner for action.

The examiner should review the reexamination clerk's entry of the reexamination certificate to ensure that all certificate changes are properly entered so that (A) the reexamination will be given on an accurate specification and claims, and (B) the appropriate version of the patent will be printed in any future reexamination certificate that will ultimately issue. The examiner will issue a decision on the reexamination request **based on the patent claims (and specification) with the certificate changes entered.**

Once reexamination is ordered, the reexamination proceeding is conducted in accordance with 35 U.S.C. 305, 37 CFR 1.550 and MPEP § 2254 - § 2294.

PATENT OWNER'S SUBMISSION OF AMENDMENTS:

Any amendment to the claims (or specification) of the reexamination proceeding must be presented as if the changes made to the patent text via the reexamination certificate are a part of the original patent. Thus, all italicized text in the certificate is considered as if the text was present without italics in the original patent. Further, any certificate text placed in brackets is considered as if it were never present in the patent at all.

For example, an amendment in a "reexamination of a reexamination" might include italicized text of claim 1 of the reexamination certificate as underlined (or italicized) in the copy of claim 1 submitted in the amendment.This would indicate that text already present in the patent (via the reexamination certificate) is again being added. This would be an improper amendment, and as such, an "informal submission." Accordingly, the examiner would notify the patent owner that the amendment does not comply with 37 CFR 1.530. Form PTOL-475 would be used to provide the notification of the defect in the amendment, and a 1-month time period would be set for correction of the defect. See also MPEP § 2266.02.

COMPLETION OF THE CHECKLISTS:

Upon conclusion of the reexamination proceeding, the reexamination file will be processed by the TC so that the Office of Publication can prepare and issue a certificate in accordance with 35 U.S.C. 307 and 37 CFR 1.570. The certificate will set forth the results of the reexamination proceeding and the content of the patent following the proceeding. See MPEP § 2287. The examiner will complete a checklist, Form PTO-1516, and the reexamination clerk will complete the reexamination clerk checklist Form PTO-1517. In completing the checklists, the examiner and reexamination clerk should keep in mind that the "patent" is the *original patent as modified by the reexamination certificate*. For example, claims canceled by the prior reexamination certificate should be listed in Item 8 - "Claim(s) _____ (and) _____ was (were) previously canceled." Likewise, in Item 12 of the examiner checklist - "Claim(s) ____ (and) ____ is (are) determined to be patentable as amended."; any claims amended **only** by the prior reexamination certificate (i.e., not further amended in the present reexamination) **should not be listed**.

Each "reexamination of a reexamination" must be reviewed by the TC Special Program Examiner and the paralegal to ensure compliance with the above guidelines.

2296 USPTO Forms To Be Used

The following forms must be used in reexamination actions and processing (these forms are not reproduced below):

(A) Order - PTOL 471

(B) General Office Action - PTOL 466

(C) Advisory Action - PTOL 467

(D) Notice re Appeal & re Defective Brief - PTOL 468

(E) NIRC - PTOL 469

(F) Transmittal of Communication to Third Party Requester - PTOL 465

(G) Interview Summary - PTOL 474

(H) Notice of Defective Paper - PTOL 475

(I) General Reexam Communication (with SSP) - PTOL 473

(J) Clerical Checklist - PTOL 1517

(K) Examiner Checklist - PTOL 1516

A Request for *Ex Parte* Reexamination Transmittal Form, PTO/SB/57, is available on the USPTO web site at http://www.uspto.gov for use in the filing of a request for reexamination; its use, however, is not mandatory.

Chapter 2300 Interference Proceedings

2300.01 Introduction
2300.02 Provoking an Interference
2301.01 Preliminaries to an Interference
2301.01(a) In Different Technology Centers
2301.01(b) The Interference Search
2301.02 Definitions
2302 Ownership of Applications and Patents Involved in an Interference
2303 Interference Between Applications
2303.01 Interference on Nonelected Subject Matter
2304 Applicant Requests Interference Between Applications
2305 Examiner Suggests Claim to Applicant
2305.01 Action To Be Made at Time of Suggesting Claims
2305.02 Time Limit Set for Presenting Suggested Claims
2305.03 Suggested Claims Presented After Period for Reply Running Against Application
2305.04 Suggestion of Claims, Application in Issue or in Interference
2306 Interference Between an Application and a Patent
2306.01 Patent Has Filing Date Later Than Application
2307 Applicant Requests Interference With a Patent
2307.01 Presentation of Claims Corresponding to Patent Claims Not a Reply to Last Office Action
2307.02 Rejection of Claims Corresponding to Patent Claims
2307.03 Presentation of Claims for Interference With a Patent, After Prosecution of Application is Closed
2307.04 Presentation of Claims for Interference With a Patent Involved in a Reexamination Proceeding
2307.05 Corresponding Patent Claims Not Identified
2307.06 Presentation of Claims for Interference with a Patent, Patentee Must Be Notified
2308 Interference Between an Application and a Patent; *Prima Facie* Showing by Applicant
2308.01 Patent Has Filing Date Earlier Than Application
2308.02 Showing Under 37 CFR 1.608(b)
2309 Proposed Interference
2309.02 Preparation of Papers
2309.03 Affidavits and Declarations Retained in File
2309.06 Interfering Subject Matter in "Secrecy Order" Cases
2311 Declaration of Interference
2312 Public Access to Files
2314 Jurisdiction Over Interference
2315 Suspension of *Ex Parte* Prosecution
2315.01 Suspension - Overlapping Applications
2333 Preliminary Motions - Related to Application Not Involved in Interference
2340 Motions, Hearing and Decision
2341 Unpatentability Discovered
2342 Addition to Interference
2358 Final Decision
2359 Board Recommendation
2360 Reexamination, Reissue, Protest, or Litigation During Interference
2361 Termination of Interference After Judgment
2363 Action After Interference
2363.01 No Interference in Fact
2363.02 The Winning Party
2363.03 The Losing Party
2364 Entry of Amendments
2364.01 Amendments Filed During Interference
2365 Second Interference

2300.01 Introduction

35 U.S.C. 135. Interferences.

(a) Whenever an application is made for a patent which, in the opinion of the Director, would interfere with any pending application, or with any unexpired patent, an interference may be declared and the Director shall give notice of such declaration to the applicants, or applicant and patentee, as the case may be. The Board of Patent Appeals and Interferences shall determine questions of priority of the inventions and may determine questions of patentability. Any final decision, if adverse to the claim of an applicant, shall constitute the final refusal by the Patent and Trademark Office of the claims involved, and the Director may issue a patent to the applicant who is adjudged the prior inventor. A final judgment adverse to a patentee from which no appeal or other review has been or can be taken or had shall constitute cancellation of the claims involved in the patent, and notice of such cancellation shall be endorsed on copies of the patent distributed after such cancellation by the Patent and Trademark Office.

(b)(1) A claim which is the same as, or for the same or substantially the same subject matter as, a claim of an issued patent may not be made in any application unless such a claim is made prior to one year from the date on which the patent was granted.

(2) A claim which is the same as, or for the same or substantially the same subject matter as, a claim of an application published under section 122(b) of this title may be made in an application filed after the application is published only if the claim is made before 1 year after the date on which the application is published.

(c) Any agreement or understanding between parties to an interference, including any collateral agreements referred to therein, made in connection with or in contemplation of the termination of the interference, shall be in writing and a true copy thereof filed in the Patent and Trademark Office before the termi-

nation of the interference as between the said parties to the agreement or understanding. If any party filing the same so requests, the copy shall be kept separate from the file of the interference, and made available only to Government agencies on written request, or to any person on a showing of good cause. Failure to file the copy of such agreement or understanding shall render permanently unenforceable such agreement or understanding and any patent of such parties involved in the interference or any patent subsequently issued on any application of such parties so involved. The Director may, however, on a showing of good cause for failure to file within the time prescribed, permit the filing of the agreement or understanding during the six-month period subsequent to the termination of the interference as between the parties to the agreement or understanding.

The Director shall give notice to the parties or their attorneys of record, a reasonable time prior to said termination, of the filing requirement of this section. If the Director gives such notice at a later time, irrespective of the right to file such agreement or understanding within the six-month period on a showing of good cause, the parties may file such agreement or understanding within sixty days of the receipt of such notice.

Any discretionary action of the Director under this subsection shall be reviewable under section 10 of the Administrative Procedure Act.

(d) Parties to a patent interference, within such time as may be specified by the Director by regulation, may determine such contest or any aspect thereof by arbitration. Such arbitration shall be governed by the provisions of title 9 to the extent such title is not inconsistent with this section. The parties shall give notice of any arbitration award to the Director, and such award shall, as between the parties to the arbitration, be dispositive of the issues to which it relates. The arbitration award shall be unenforceable until such notice is given. Nothing in this subsection shall preclude the Director from determining patentability of the invention involved in the interference.

This chapter is designed to aid examiners in identifying potential interferences and in preparing to discuss potential interferences with Interference Practice Specialists and with the Board of Patent Appeals and Interferences. Since each interference is unique and must be declared and decided on its own facts, any given interference may have features that vary significantly from those discussed in this chapter.

Interferences are quite rare during patent prosecution. At present, fewer than one percent of all applications become involved in interferences. Consequently, the examiner should focus on identifying when an interference is necessary, not on the actual mechanics of proposing an interference. Each Technology Center (TC) has at least one Interference Practice Specialist (IPS), who has received special training in preparing cases for an interference.The examiner should consult with the IPS to ensure that an interference exists and that the examiner has satisfied the requirements for proposing an interference. See MPEP § 2309 through § 2309.02 regarding procedures for preparation of interference papers by the examiner.

An interference is a proceeding, conducted before the Board of Patent Appeals and Interferences (Board), to determine priority of invention between a pending application and one or more pending applications and/or one or more unexpired patents. Jurisdiction to decide an interference is granted by 35 U.S.C. 135(a), which also grants the Board discretion to determine questions of patentability in the proceeding.

The United States Patent and Trademark Office (USPTO) does not have jurisdiction to conduct interferences which involve only patents, i.e., which do not involve at least one pending application. Jurisdiction over those proceedings is conferred on the Federal courts by 35 U.S.C. 291.

Since the Board is the body which has jurisdiction over interferences conducted in the USPTO, the examiner's involvement in the proceeding, once the interference has been declared, is minimal. This chapter therefore is generally limited to information concerning those aspects of an interference, including preliminary and subsequent proceedings, which are within the jurisdiction of, or are relevant to, the examiner. It does not include the procedure which is followed before the Board during the interference. Persons seeking information concerning that procedure should consult the text of the pertinent rules, 37 CFR subpart E, the notices of rulemaking and accompanying comments adopting those rules. These notices and comments, as well as other notices pertinent to current interference practice and procedure, are as follows:

Final Rule, 49 FR 48416 (Dec.12, 1984), 1050 O.G. 385 (Jan.29, 1985);

Correction Notice, 50 FR 23122 (May 31, 1985), 1059 O.G. 27 (Oct. 22, 1985);

Notices of Rulemaking: 52 FR 13833 (Apr. 27, 1987), 1080 O.G. 15 (July 14, 1987);

53 FR 23728 (June 23, 1988), 1092 O.G. 26 (July 12, 1988);

54 FR 29548 (July 13, 1989), 1105 O.G. 5 (Aug. 1, 1989);

56 FR 42528 (Aug. 28, 1991)*, 1136 O.G. 40 (Mar. 17, 1992);

*corrected, 56 FR 46823 (Sep. 16, 1991)

58 FR 49432 (Sep. 23, 1993), 1155 O.G. 65 (Oct. 19, 1993);

60 FR 14488 (Mar. 17, 1995), 1173 O.G. 36 (Apr. 11, 1995);

64 FR 12901 (Mar. 16, 1999);

65 FR 56792 (Sept. 20, 2000), 1239 O.G. 125 (Oct. 17, 2000);

65 FR 70489 (Nov. 24, 2000), 1241 O.G. 68 (Dec. 19, 2000).

Notices: *Access to Interference Settlement Agreements by Government Agencies*, 972 O.G. 2 (July 4, 1978); *Interference Practice: Response to Order to Show Cause Under 37 CFR 1.640*, 1074 O.G. 4 (Jan. 6, 1987); *Interference Practice: Fraud and Inequitable Conduct Allegations*, 1074 O.G. 42 (Jan. 27, 1987); *Interferences - Preliminary Motions for Judgment*, 1118 O.G. 19 (Sep. 11, 1990); *Consideration of Fraud and Inequitable Conduct in Patent Interference Cases*, 1133 O.G. 21 (Dec. 10, 1991); *Interference Practice: Consideration of Fraud and Inequitable Conduct* (Id.); *Interference Practice: Matters Relating to Belated Preliminary Motions*, 1144 O.G. 8 (Nov. 3, 1992); *Availability of Interference Files and Interference Related Application and Patent Files*, 1184 O.G. 15 (Mar. 5, 1996); *Admissibility of Electronic Records in Interferences*, 1208 O.G. 35 (Mar. 10, 1998); *Publication of Opinions and Orders Entered by the Board of Patent Appeals and Interferences*, 1217 O.G. 17 (Dec. 1, 1998); *Interference Practice – Interference Rules Which Require a Party to "Show the Patentability" of a Claim*, 1217 O.G. 17 (Dec. 1, 1998); *Interference Practice – New Procedures for Handling Interference Cases at the Board of Patent Appeals and Interferences*, 1217 O.G. 18 (Dec. 1, 1998).

The text of the notices listed above is available on the USPTO web page at www.uspto.gov.

2300.02 Provoking an Interference

An interference may be provoked in several different ways, depending upon the circumstances. Each of these is covered in detail in the subsequent sections.

(A) An interference between pending applications may be requested by an applicant who has become aware of another application which may be claiming the same invention. See MPEP § 2303 and § 2304. If the applications are not claiming the same patentable invention, it may be necessary for the examiner to suggest a claim in one or more of the applications. See MPEP § 2305.

(B) An interference between a pending application and a patent is normally provoked by the applicant. See MPEP § 2306 - § 2308.

2301.01 Preliminaries to an Interference

An interference is an expensive and time-consuming proceeding. Yet, it may be necessary to determine priority when two applicants, or an applicant and a patentee, are claiming the same patentable subject matter and their filing dates are so close together that there is a reasonable possibility that the first to file is not the first inventor. The fact that an application is a reissue application does not preclude it from being involved in an interference.

The greatest care must therefore be exercised both in the search for interfering applications and in determining whether an interference should be declared. Also the claims in recently issued patents, especially those used as references against the application claims, should be considered for possible interference.

The question of the propriety of proposing an interference in any given case is affected by so many factors that a discussion of all of them here is impracticable. Some circumstances which render an interference unnecessary are hereafter noted, but each instance must be carefully considered if serious errors are to be avoided.

In determining whether an interference is necessary, a claim should be given the broadest interpretation which it reasonably will support, bearing in mind the following general principles:

(A) The interpretation should not be strained;

(B) Express limitations in the claim should not be ignored nor should limitations be read therein;

(C) Before a claim (unless it is a patented claim) is considered as the basis for the count of an interference, the claim should be allowable and in good form. No pending claim which is indefinite, ambiguous or otherwise defective should be the basis for a count of an interference;

(D) A claim copied from a patent, if ambiguous, should be interpreted in the light of the patent in which it originated for purposes of determining whether a party has a right to copy a claim;

(E) An interference will not normally be instituted between cases which have the same inventive entity, or a common assignee. See 37 CFR 1.602(a). Such cases should be treated as set forth in MPEP § 804 *et seq.* Also see MPEP § 2302; and

(F) If doubts exist as to whether there is an interference, an interference should not be declared.

2301.01(a) In Different Technology Centers

If there is a prospective interference between applications assigned to different Technology Centers (TCs), the applications should be transferred to the TC where the controlling interfering claim would be classified. After termination of the interference, further transfer may be necessary depending upon the outcome.

2301.01(b) The Interference Search

The search for interfering applications must not be limited to the class or subclass in which the application is classified, but must be extended to all classes, in and out of the TC, which it has been necessary to search in the examination of the application. See MPEP § 1302.08.

Moreover, the possibility of the existence of interfering applications should be kept in mind throughout the prosecution. Where the examiner at any time finds that two or more applications are claiming the same invention and the examiner does not deem it expedient to institute interference proceedings at that time, the examiner should make a record of the possible interference on the face of the file wrapper in the space reserved for class and subclass designations. Such notations, however, if made on the file wrapper or drawings, must not be such as to give any hint of the date or identity of a supposedly interfering application. Application numbers or filing dates of conflicting applications must never be placed upon drawings or file wrappers. A book of "Prospective Interferences" should be maintained containing complete data concerning possible interferences and the page and line of this book should be referred to on the respective file wrappers or drawings. For future reference, this book may include notes as to why prospective interferences were not declared.

In determining whether to propose an interference, the primary examiner must be of the opinion that an interference exists. The examiner should consult with an Interference Practice Specialist to confirm the existence of interfering subject matter. See MPEP § 2309.

The TC Director should be consulted if it is believed that the circumstances justify an interference between applications neither of which is ready for allowance.

2301.02 Definitions

37 CFR 1.601. Scope of rules, definitions.

This subpart governs the procedure in patent interferences in the Patent and Trademark Office. This subpart shall be construed to secure the just, speedy, and inexpensive determination of every interference. For the meaning of terms in the Federal Rules of Evidence as applied to interferences, see § 1.671(c). Unless otherwise clear from the context, the following definitions apply to this subpart:

(a) *Additional discovery* is discovery to which a party may be entitled under § 1.687 in addition to discovery to which the party is entitled as a matter of right under § 1.673(a) and (b).

(b) *Affidavit* means affidavit, declaration under § 1.68, or statutory declaration under 28 U.S.C. § 1746. A transcript of an *ex parte* deposition may be used as an affidavit.

(c) *Board* means the Board of Patent Appeals and Interferences.

(d) *Case-in-chief* means that portion of a party's case where the party has the burden of going forward with evidence.

(e) *Case-in-rebuttal* means that portion of a party's case where the party presents evidence in rebuttal to the case-in-chief of another party.

(f) A *count* defines the interfering subject matter between two or more applications or between one or more applications and one or more patents. When there is more than one count, each count shall define a separate patentable invention. Any claim of an application or patent that is designated to correspond to a count is a claim involved in the interference within the meaning of 35 U.S.C. 135(a). A claim of a patent or application that is designated to correspond to a count and is identical to the count is said to correspond exactly to the count. A claim of a patent or application that is designated to correspond to a count but is not identical to the count is said to correspond substantially to the count. When a count is broader in scope than all claims which correspond to the count, the count is a phantom count.

(g) The *effective filing date* of an application is the filing date of an earlier application, benefit of which is accorded to the application under 35 U.S.C. 119, 120, 121, or 365 or, if no benefit is accorded, the filing date of the application. The effective filing date of a patent is the filing date of an earlier application, benefit of which is accorded to the patent under 35 U.S.C. 119, 120, 121, or 365 or, if no benefit is accorded, the filing date of the application which issued as the patent.

(h) In the case of an application, *filing date* means the filing date assigned to the application. In the case of a patent, "filing

date" means the filing date assigned to the application which issued as the patent.

(i) An *interference* is a proceeding instituted in the Patent and Trademark Office before the Board to determine any question of patentability and priority of invention between two or more parties claiming the same patentable invention. An interference may be declared between two or more pending applications naming different inventors when, in the opinion of an examiner, the applications contain claims for the same patentable invention. An interference may be declared between one or more pending applications and one or more unexpired patents naming different inventors when, in the opinion of an examiner, any application and any unexpired patent contain claims for the same patentable invention.

(j) An *interference-in-fact* exists when at least one claim of a party that is designated to correspond to a count and at least one claim of an opponent that is designated to correspond to the count define the same patentable invention.

(k) A *lead* attorney or agent is a registered attorney or agent of record who is primarily responsible for prosecuting an interference on behalf of a party and is the attorney or agent whom an administrative patent judge may contact to set times and take other action in the interference.

(l) A *party* is an applicant or patentee involved in the interference or a legal representative or an assignee of record in the Patent and Trademark Office of an applicant or patentee involved in an interference. Where acts of a party are normally performed by an attorney or agent, "party" may be construed to mean the attorney or agent. An inventor is the individual named as inventor in an application involved in an interference or the individual named as inventor in a patent involved in an interference.

(m) A *senior party* is the party with the earliest effective filing date as to all counts or, if there is no party with the earliest effective filing date as to all counts, the party with the earliest filing date. A *junior party* is any other party.

(n) Invention "A" is the *same patentable invention* as an invention "B" when invention "A" is the same as (35 U.S.C. 102) or is obvious (35 U.S.C. 103) in view of invention "B" assuming invention "B" is prior art with respect to invention "A". Invention "A" is a *separate patentable invention* with respect to invention "B" when invention "A" is new (35 U.S.C. 102) and non-obvious (35 U.S.C. 103) in view of invention "B" assuming invention "B" is prior art with respect to invention "A".

(o) *Sworn* means sworn or affirmed.

(p) *United States* means the United States of America, its territories and possessions.

(q) A *final decision* is a decision awarding judgment as to all counts. An *interlocutory order* is any other action taken by an administrative patent judge or the Board in an interference, including the notice declaring an interference.

(r) *NAFTA country* means NAFTA country as defined in section 2(4) of the North American Free Trade Agreement Implementation Act, Pub. L. 103-182, 107 Stat. 2060 (19 U.S.C. 3301).

(s) *WTO member country* means WTO member country as defined in section 2(10) of the Uruguay Round Agreements Act, Pub. L. 103-465, 108 Stat. 4813 (19 U.S.C. 3501).

37 CFR 1.601 defines various terms used in Subpart E of Title 37, Code of Federal Regulation, including "same patentable invention," "separate patentable invention," "sworn," "United States," "final decision," "interlocutory order," "NAFTA country" and "WTO member country." "Affidavits" include declarations filed under 35 U.S.C. 25 and 37 CFR 1.68 as well as statutory declarations under 28 U.S.C. 1746. The definition "United States" is the same as the definition of United States in 35 U.S.C. 100(c). "NAFTA country" is defined in section 2(4) of the NAFTA Implementation Act, which includes United States, Mexico and Canada. For purposes of 35 U.S.C. 104, inventions made abroad in a NAFTA country would include only Mexico and Canada.

The definition of "interference" permits an interference between one or more applications and one or more patents provided it does not create an interference between patents. Thus, the revised rules follow the policy of *Wilson v. Yakel*, 1876 C.D. 245 (Comm'r Pat. 1876) and, to the extent inconsistent therewith, do not follow the policy announced in *Touval v. Newcombe*, 194 USPQ 509 (Comm'r Pat. 1976). An interference exists between two applications, or an application and a patent, if at least one claim from each would have anticipated or rendered obvious the subject matter of at least one claim of the other. The test is analogous to a statutory or obviousness type double patenting analysis. Note that the claims need not be identical in language or scope for an interference to exist. See *Aelony v. Arni*, 547 F.2d 566, 192 USPQ 486 (CCPA 1977) (finding an interference where the claims did not even overlap).

A "count" defines interfering subject matter. An interference may have two counts only if the second count defines a "separate patentable invention" from the first count. The reason the second count must define a separate patentable invention is to permit the USPTO to lawfully issue separate patents to different parties in an interference when a single party does not prevail as to all counts. A "separate patentable invention" is defined in 37 CFR 1.601(n):

> Invention "A" is a *separate patentable invention* with respect to invention "B" when invention "A" is new (35 U.S.C. 102) and non-obvious (35 U.S.C. 103) in view of invention "B" assuming invention "B" is prior art with respect to invention "A".

2302 Ownership of Applications and Patents Involved in an Interference

37 CFR 1.602. Interest in applications and patents involved in an interference.

(a) Unless good cause is shown, an interference shall not be declared or continued between (1) applications owned by a single party or (2) applications and an unexpired patent owned by a single party.

(b) The parties, within 20 days after an interference is declared, shall notify the Board of any and all right, title, and interest in any application or patent involved or relied upon in the interference unless the right, title, and interest is set forth in the notice declaring the interference.

(c) If a change of any right, title, and interest in any application or patent involved or relied upon in the interference occurs after notice is given declaring the interference and before the time expires for seeking judicial review of a final decision of the Board, the parties shall notify the Board of the change within 20 days after the change.

37 CFR 1.602 continues the previous USPTO practice (former 37 CFR 1.201(c)) of not declaring or continuing an interference between (A) two or more applications owned by the same party or (B) an application and a patent owned by a single party unless good cause is shown. A corporation and its wholly owned subsidiary are considered a "single party" within the meaning of 37 CFR 1.602(a).

COMMON OWNERSHIP

Where applications by different inventive entities but of common ownership claim the same subject matter or subject matter that is not patentably different:

(A) Interference therebetween is normally not instituted since there is no conflict of interest. Elimination of conflicting claims from all except one application should usually be required. 37 CFR 1.78(c). The common assignee must determine the application in which the conflicting claims are properly placed. Treatment by rejection is set forth in MPEP § 804.03.

(B) Where an interference with a third party is found to exist, the commonly owned application having the earliest effective filing date will be placed in interference with the third party. The common assignee may move during the interference under 37 CFR 1.633(d) to substitute the other commonly owned application, if desired.

2303 Interference Between Applications

37 CFR 1.603. Interference between applications; subject matter of the interference.

Before an interference is declared between two or more applications, the examiner must be of the opinion that there is interfering subject matter claimed in the applications which is patentable to each applicant subject to a judgment in the interference. The interfering subject matter shall be defined by one or more counts. Each application must contain, or be amended to contain, at least one claim that is patentable over the prior art and corresponds to each count. All claims in the applications which define the same patentable invention as a count shall be designated to correspond to the count.

Where two or more applications are found to be claiming the same patentable invention, they may be put in interference, dependent on the status of the respective applications and the difference between their filing dates. One of the applications should be in condition for allowance. Unusual circumstances may justify an exception to this if the approval of the TC Director is obtained.

Interferences will not be declared between pending applications if there is a difference of more than 3 months in the effective filing dates of the oldest and the next oldest applications, in the case of inventions of a simple character, or a difference of more than 6 months in the effective filing dates of the applications in other cases, except in exceptional situations, as determined and approved by the TC Director. One such exceptional situation would be where one application has the earliest effective filing date based on foreign priority and the other application has the earliest effective United States filing date. If an interference is to be declared, all applications having the interfering subject matter should be identified.

Before proposing an interference, it is essential that the examiner make certain that each of the applications contains a claim to the same patentable invention (as defined in 37 CFR 1.601(n)) and that each of those claims is clearly readable upon the disclosure of that party and allowable in its application. See *Rowe v. Dror*, 112 F.3d 473, 479, 42 USPQ2d 1550, 1554 (Fed. Cir. 1997).

If the applications each contain at least one claim drawn to the same patentable invention (37 CFR 1.601(n)), the examiner proceeds to propose the interference; otherwise, one or more claims must be suggested to some or all of the parties. See MPEP § 2305. Since two applications do not have to contain

an identical claim in order to be placed in interference, the suggestion of a claim should not normally be necessary.

2303.01 Interference on Nonelected Subject Matter

Where the subject matter found to be allowable in one application is disclosed and claimed in another application, but the claims therein to such subject matter are either nonelected or subject to election, the question of interference should be considered. The requirement of 37 CFR 1.601(i) that the conflicting applications shall contain claims for the same patentable invention should be interpreted as meaning generally that the conflicting claimed subject matter is sufficiently supported in each application and is patentable to each applicant over the prior art. The statutory requirement of first inventorship should be given primary emphasis and every effort should be made to avoid prematurely issuing a patent where there is an adverse claimant.

Following are illustrative situations where the examiner should take action toward instituting interference:

(A) Application filed with claims to divisible inventions I and II. Before action requiring restriction is made, examiner discovers another application having claims to invention I.

The situation is not altered by the fact that a requirement for restriction had actually been made but had not been replied to. Nor is the situation materially different if an election of noninterfering subject matter had been made without traverse but no action given on the merits of the elected invention.

(B) Application filed with claims to divisible inventions I and II and in reply to a requirement for restriction, applicant traverses the same and elects invention I. Examiner gives an action on the merits of I. Examiner subsequently finds an application to another containing allowed claims to invention II and which is ready for issue.

The situation is not altered by the fact that the election is made without traverse and the nonelected claims possibly canceled.

(C) Application filed with generic claims and claimed species a, b, c, d, and e. Generic claims rejected and election of a single species required. Applicant elects species a, but continues to urge allowability of generic claims. Examiner finds another application claiming species b which is ready for issue.

An interference may be proposed even though the generic claims in the first application are not allowable.

(D) Application filed with generic claims and claims to five species and other species disclosed but not specifically claimed. Examiner finds another application the disclosure and claims of which are restricted to one of the unclaimed species and have been found allowable.

The prosecution of generic claims is taken as indication of an intention to cover all species disclosed which come under the generic claim.

In all the above situations, the applicant has shown an intention to claim the subject matter which is actually being claimed in another application. These are to be distinguished from situations where a distinct invention is claimed in one application but merely disclosed in another application without evidence of an intent to claim the same. The question of interference should not be considered in the latter instance. However, if the application disclosing but not claiming the invention is senior, and the junior application is ready for issue, the matter should be discussed with the TC Director to determine the action to be taken.

2304 Applicant Requests Interference Between Applications

37 CFR 1.604. Request for interference between applications by an applicant.

(a) An applicant may seek to have an interference declared with an application of another by,

(1) Suggesting a proposed count and presenting at least one claim corresponding to the proposed count or identifying at least one claim in its application that corresponds to the proposed count,

(2) Identifying the other application and, if known, a claim in the other application which corresponds to the proposed count, and

(3) Explaining why an interference should be declared.

(b) When an applicant presents a claim known to the applicant to define the same patentable invention claimed in a pending application of another, the applicant shall identify that pending application, unless the claim is presented in response to a suggestion by the examiner. The examiner shall notify the Commissioner of any instance where it appears an applicant may have failed to comply with the provisions of this paragraph.

See MPEP § 2309 through § 2309.02 regarding procedures for preparation of interference papers by the examiner. If the applicant presents a new claim to provoke an interference with a published application, the examiner should determine whether the new claim is barred under 35 U.S.C. 135(b)(2). Note the one year from publication date limitation found in 35 U.S.C. 135(b) regarding applications published under 35 U.S.C. 122(b).

2305 Examiner Suggests Claim to Applicant

37 CFR 1.605. Suggestion of claim to applicant by examiner.

(a) If no claim in an application is drawn to the same patentable invention claimed in another application or patent, the examiner may suggest that an applicant present a claim drawn to an invention claimed in another application or patent for the purpose of an interference with another application or a patent. The applicant to whom the claim is suggested shall amend the application by presenting the suggested claim within a time specified by the examiner, not less than one month. Failure or refusal of an applicant to timely present the suggested claim shall be taken without further action as a disclaimer by the applicant of the invention defined by the suggested claim. At the time the suggested claim is presented, the applicant may also call the examiner's attention to other claims already in the application or presented with the suggested claim and explain why the other claims would be more appropriate to be designated to correspond to a count in any interference which may be declared.

(b) The suggestion of a claim by the examiner for the purpose of an interference will not stay the period for response to any outstanding Office action. When a suggested claim is timely presented, *ex parte* proceedings in the application will be stayed pending a determination of whether an interference will be declared.

While the claims of two or more applications may not be identical, if they are directed to the same patentable invention, as defined in 37 CFR 1.601(n), an interference exists. See MPEP § 2303. Therefore, it should be emphasized that it should not be necessary to suggest a claim to an applicant in most situations. If an applicant is not claiming the same patentable invention as another applicant, the examiner, in deciding whether to suggest a claim or claims to the first applicant, should bear in mind that mere disclosure by an applicant of an invention which he or she is not claiming does not afford a ground for suggesting to that applicant a claim for the said invention based upon claims from another application that is claiming the invention. The intention of the parties to claim the same patentable invention, as expressed in the summary of the invention or elsewhere in the disclosure or in the claims, is essential to declaring an interference or suggesting interfering claims in every instance.

The question of what claim or claims to suggest in the interfering application is one of great importance, and failure to suggest claims that will clearly define the matter in issue leads to confusion and to prolongation of the contest.

Before deciding what claim or claims to suggest to an applicant, the examiner should decide what the count or counts of the prospective interference will be, keeping in mind that the count must be patentable over the prior art and define the parties' common invention. The claim suggested to the applicant need not be identical to the prospective count, but rather should be the broadest claim within the scope of the prospective count which the applicant's disclosure will support, and which is otherwise patentable to the applicant. In general, only one claim should be suggested for each prospective count. Moreover, if the other application has been published, the examiner should ensure that the suggested claim is not barred under 35 U.S.C. 135(b)(2).

Under 37 CFR 1.605, timely filing of an amendment presenting a claim suggested by the examiner for purposes of an interference would stay *ex parte* proceedings in the application in which the claim is presented pending a determination by the examiner of whether an interference will be declared. Also under 37 CFR 1.605(a), when an examiner suggests a claim, the applicant will be required to copy verbatim the suggested claim. At the time the suggested claim is copied, however, the applicant may also (A) call the examiner's attention to other claims already in the application or which are presented with the copied claim and (B) explain why the other claims would be more appropriate to be designated to correspond to a count in any interference which may be declared.

A reply to the examiner's suggestion of a claim is not complete unless it includes an amendment adding the exact claim suggested to the application. Even though the applicant may consider the suggested claim unpatentable, too narrow, or otherwise unsuitable, it must be presented; otherwise, the invention defined by the suggested claim is considered to be disclaimed. The applicant must make known any such

objections to the examiner, and may at the same time present other claims, or call the examiner's attention to other claims already in the application, and explain why those claims would be more appropriately designated to correspond to a count in the interference. The examiner may then determine whether the applicant's alternatively proposed claims are more appropriate than the claim suggested.

If, in copying a suggested claim, an error is introduced by the applicant, the examiner should correct the applicant's claim to correspond to the suggested claim.

It should be noted at this point that if an applicant presents a claim which allegedly corresponds exactly or substantially to a claim in another application or patent without suggestion by the examiner, 37 CFR 1.604(b) and 37 CFR 1.607(c) require him or her to identify the other application or patent. See MPEP § 2307.05.

If the parties have the same attorney, notification of this fact should be given to both parties at the time claims are suggested even though claims are suggested to only one party. Notation of the persons to whom this letter is mailed should be made on all copies.

The content of Form Paragraph 23.05 is usually added to the letter suggesting claims where the same attorney or agent is of record in applications of different ownership which have conflicting subject matter.

¶ 23.05 Same Attorney, Both Applications

Attention is called to the fact that the attorney (or agent) in this application is also the attorney (or agent) in an application of another party and of different ownership claiming substantially the same patentable invention as claimed in the above identified application.

The examiner should raise the fact that two conflicting parties have the same attorney by drawing the matter to the attention of the Board when proposing the interference as explained in MPEP § 2309.02.

Form Paragraphs 23.04 and 23.06 may be used to suggest claims for purposes of interference to applicants. If the Office action incorporating these Form Paragraphs addresses other issues, such as a rejection of other claims, Form Paragraph 23.07 should be included at the end of the action.

¶ 23.04 Suggestion of Claim

The following allowable claim is suggested for the purpose of an interference:

[1]

The suggested claim must be copied exactly, although other claims may be proposed under 37 CFR 1.605(a).

Applicant is given ONE MONTH or THIRTY DAYS, whichever is longer, from the mailing date of this communication to make the suggested claim. Failure to do so will be considered a disclaimer of the subject matter of this claim under the provisions of 37 CFR 1.605(a), but will **not** result in abandonment of this application. THE PROVISIONS OF 37 CFR 1.136 DO NOT APPLY TO THE TIME SPECIFIED IN THIS ACTION.

Claim **[2]** considered unpatentable over this suggested claim.

Examiner Note:

1. In bracket 1, insert the suggested claim.
2. In bracket 2, list all claims pending in the application not considered to be patentably distinct from the suggested claim.
3. Only one claim should be suggested unless claims to separate patentably distinct inventions are present. See 37 CFR 1.601(n). To suggest an additional claim to a separate distinct invention, form paragraph 23.06 should follow this paragraph.
4. If the Office action addresses other issues, such as a rejection of other claims, form paragraph 23.07 should be included at the end of the action.

¶ 23.06 Suggestion of Additional Claim for a Distinct Invention

The following claim is considered allowable and directed to a separate patentable invention from the claim suggested above:

[1]

The additionally suggested claim must be copied exactly, although other claims may be proposed under 37 CFR 1.605(a).

Applicant is given ONE MONTH or THIRTY DAYS, whichever is longer, from the mailing date of this communication to make this additionally suggested claim. Failure to do so will be considered a disclaimer of the subject matter of this claim under the provisions of 37 CFR 1.605(a), but will **not** result in abandonment of this application. THE PROVISIONS OF 37 CFR 1.136 DO NOT APPLY TO THE TIME SPECIFIED IN THIS ACTION.

Claim **[2]** considered unpatentable over this additionally suggested claim.

Examiner Note:

This paragraph must be preceded by form paragraph 23.04 and should only be used to suggest a patentably distinct claim from the one suggested in form paragraph 23.04.

¶ 23.07 Suggestion of Claims - Prosecution Suspended

Applicant need not respond to the remaining issues in this action if a suggested claim is copied for the purpose of an interference within the time limit specified above (37 CFR 1.605(b)).

Examiner Note:

This paragraph should be used at the end of any Office action where claims are suggested using either form paragraph 23.04 or 23.09 and where additional issues (e.g., a rejection of other claims) are addressed in the action that will be suspended should applicant copy the suggested claim.

2305.01 Action To Be Made at Time of Suggesting Claims

At the same time that the claims are suggested, an action is made on each of the applications that are up for action by the examiner, whether they be new or amended applications. In this way, possible motions under 37 CFR 1.633(c) and (d) may be forestalled. That is, the action on the new or amended application may bring to light patentable claims that should be included as corresponding to the count, or as forming the basis for an additional count, of the interference, and, on the other hand, the rejection of unpatentable claims will serve to indicate to the opposing parties the position of the examiner with respect to such claims.

When an examiner suggests that an applicant present a claim for interference, the examiner should state which of the claims already in the application are, in his or her opinion, unpatentable over the claim suggested. This statement does not constitute a formal rejection of the claims, but if the applicant presents the suggested claim but disagrees with the examiner's statement, the applicant should so state on the record, not later than the time the claim is presented. *In re Bandel*, 348 F.2d 563, 146 USPQ 389 (CCPA 1965). If the applicant does not present the suggested claim by the expiration of the period fixed for its presentation, the examiner should then reject those claims which were previously stated as being unpatentable over the suggested claim on the basis that the failure to present constituted a concession that the subject matter of those claims is the prior invention of another in this country under 35 U.S.C. 102(g) and thus prior art to the applicant under 35 U.S.C. 103. *In re Oguie*, 517 F.2d 1382, 186 USPQ 227 (CCPA 1975). If the applicant does present the suggested claim, when the interference is declared, the claims stated to be unpatentable over the suggested claim will be designated as corresponding to the count.

2305.02 Time Limit Set for Presenting Suggested Claims

Where claims are suggested for interference, a limited period determined by the examiner, not less than one month, is set for reply. See MPEP § 710.02(c).

Should any one of the applicants fail to present the claim or claims suggested within the time specified, all claims not patentable thereover are rejected on the ground that the applicant has disclaimed the invention to which they are directed. If the applicant presents the suggested claims later they will be rejected on the same ground. See MPEP § 706.03(u).

2305.03 Suggested Claims Presented After Period for Reply Running Against Application

Claims may be suggested in an application near the end of the period for reply. If the time limit for presenting the claims extends beyond the end of the period, such claims will be admitted if presented within the time limit for making the claims. This is true even though the claims are presented outside the period for reply to the rejection (usually a 3-month shortened statutory period) and even though no amendment was filed in reply to the Office action outstanding against the application at the time the claims were suggested. However, if the suggested claims are not thus presented within the specified time, the application becomes abandoned in the absence of a reply filed within the period for reply to the rejection. 37 CFR 1.605(b).

2305.04 Suggestion of Claims, Application in Issue or in Interference

An application will not be withdrawn from issue for the purpose of suggesting claims for an interference. When an application pending before the examiner contains one or more claims defining an invention to which claims may be presented in an application in issue, the examiner may write a letter suggesting such claims to the applicant whose application is in issue. The letter should state that if such claims are presented within a certain specified time, the application will be withdrawn from issue, the amendment entered, and the interference declared. Such letters must be submitted to the TC Director for approval. If the suggested claims are not presented in the application in issue, it may be necessary to withdraw it from issue for the purpose of rejecting other claims on the implied disclaimer resulting from the failure to present the suggested claims.

When the examiner suggests one or more claims for the purpose of interference with an application in issue to an applicant whose application is pending before him or her, the application in issue will not be withdrawn for the purpose of interference unless the suggested claims are presented in the pending application within the time specified by the examiner. The letter suggesting claims should be submitted to the TC Director for approval.

In either of the above cases, the Office of Patent Publication should be notified when the claims are suggested, so that in case the issue fee is paid during the time in which the suggested claims may be presented, proper steps may be taken to prevent the issue fee from being applied.

The examiner should borrow the allowed application from the Office of Patent Publication and hold the file until the claims are presented or the time limit expires. This avoids any possible issuance of the application as a patent should the issue fee be paid. To further ensure against issuance of the application, the examiner may pencil in the blank space labeled, "Date paid" in the lower right-hand corner of the face of the file wrapper, the initialed request: "Defer for interference." The issue fee is not applied to such an application until the following procedure is carried out.

When notified that the issue fee has been received, the examiner shall prepare a memo to the Office of Patent Publication requesting that issue of the patent be deferred for a period of 3-months due to possible interference. This allows a period of 2 months to complete any action needed. At the end of this 2-month period, the application must either be released to the Office of Patent Publication or be withdrawn from issue.

When an application is found claiming an invention for which claims are to be suggested to other applications already involved in interference, to form another interference, the TC Interference Practice Specialist, after obtaining the consent of the administrative patent judge in charge of the interference, borrows the last named applications from the Service Branch of the Board of Patent Appeals and Interferences. In case the application is to be added to an existing interference, the examiner should consult with the Interference Practice Specialist in accordance with MPEP § 2309. The Interference Practice Specialist will consult with the administrative patent judge in charge of the interference who will determine the action to be taken. Also, see MPEP § 2342 and § 2364.01.

Form paragraph 23.08 may be used to withdraw an application from issue for consideration of a potential interference based on suggested claims. Form paragraph 23.19 may be used to notify applicant that the foreign priority claim has not been substantiated yet.

¶ 23.08 Suggestion of Claims - Application in Issue

This application has been withdrawn from issue for consideration of a potential interference based on the claims suggested in this action.

Examiner Note:

1. If a conflicting application is in issue, it should be withdrawn using form paragraph 10.01 prior to suggesting claims for interference.
2. Either form paragraph 23.04 or 23.09 must be used in conjunction with this paragraph.

¶ 23.19 Foreign Priority Not Substantiated

Should applicant desire to obtain the benefit of foreign priority under 35 U.S.C. 119(a)-(d) prior to declaration of an interference, a translation of the foreign application should be submitted under 37 CFR 1.55 in reply to this action.

Examiner Note:

This paragraph may be used when claims are suggested to applicant from either an application or a patent and applicant has a claim for priority, but has not filed a translation of the priority document.

2306 Interference Between an Application and a Patent

37 CFR 1.606. Interference between an application and a patent; subject matter of the interference.

Before an interference is declared between an application and an unexpired patent, an examiner must determine that there is interfering subject matter claimed in the application and the patent which is patentable to the applicant subject to a judgment in the interference. The interfering subject matter will be defined by one or more counts. The application must contain, or be amended to contain, at least one claim that is patentable over the prior art and corresponds to each count. The claim in the application need not be, and most often will not be, identical to a claim in the patent. All claims in the application and patent which define the same patentable invention as a count shall be designated to correspond to the count.

An interference may be declared between an application and a patent if the application and patent are claiming the same patentable invention, as defined in 37 CFR 1.601(n), and at least one of the applicant's claims to that invention are patentable to the appli-

(A) For an application not claiming benefit of an earlier application, the actual United States filing date of the application.

(B) For an application claiming benefit of an earlier foreign application under 35 U.S.C. 119(a)-(d), the actual United States filing date of the application.

(C) For a continuing (continuation, division, continuation-in-part) application claiming the benefit of a prior patent application under 35 U.S.C. 120, the actual United States filing date of the continuing application.

(D) For a reissue application, including a continuing reissue application claiming the benefit of a reissue application under 35 U.S.C. 120, the United States filing date of the original nonreissue application on which the patent reissued is based.

(E) For an international application that has entered the United States as a Designated Office under 35 U.S.C. 371, the international filing date granted under Article 11(1) of the Patent Cooperation Treaty which is considered to be the United States filing date under 35 U.S.C. 363.

2506 Times for Submitting Maintenance Fee Payments

37 CFR 1.362(d) sets forth the time periods when the maintenance fees for a utility patent can be paid without surcharge. Those periods, referred to generally as the "window period," are the 6-month periods preceding each due date. The "due dates" are defined in 35 U.S.C. 41(b). The window periods are (1) 3 years to 3 1/2 years after the date of issue for the first maintenance fee payment, (2) 7 years to 7 1/2 years after the date of issue for the second maintenance fee payment, and (3) 11 years to 11 1/2 years after the date of issue for the third and final maintenance fee payment. A maintenance fee paid on the last day of a window period can be paid without surcharge. The last day of a window period is the same day of the month the patent was granted 3 years and 6 months, 7 years and 6 months, or 11 years and 6 months after grant of the patent.

37 CFR 1.362(e) sets forth the time periods when the maintenance fees for a utility patent can be paid with surcharge. Those periods, referred to generally as the "grace period," are the 6-month periods immediately following each due date. The grace periods are (1) 3 1/2 years and through the day of the 4th anniversary of the grant of the patent, (2) 7 1/2 years and through the day of the 8th anniversary of the grant of the patent and, (3) 11 1/2 years and through the day of the 12th anniversary of the grant of the patent. A maintenance fee may be paid with the surcharge on the same date (anniversary date) the patent was granted in the 4th, 8th, or 12th year after grant to prevent the patent from expiring.

Maintenance fees for a reissue patent are due based upon the schedule established for the original utility patent. The filing of a request for *ex parte* or *inter partes* reexamination and/or the publication of a reexamination certificate does not alter the schedule of maintenance fee payments of the original patent.

If the day for paying a maintenance fee falls on a Saturday, Sunday, or a Federal holiday within the District of Columbia, the maintenance fee may be paid on the next succeeding day that is not a Saturday, Sunday, or Federal holiday. For example, if the window period for paying a maintenance fee without a surcharge ended on a Saturday, Sunday, or a Federal holiday within the District of Columbia, the maintenance fee can be paid without surcharge on the next succeeding day that is not a Saturday, Sunday, or a Federal holiday within the District of Columbia. Likewise, if the grace period for paying a maintenance fee with a surcharge ended on a Saturday, Sunday, or a Federal holiday within the District of Columbia, the maintenance fee can be paid with surcharge on the next succeeding day that is not a Saturday, Sunday, or a Federal holiday within the District of Columbia. In the latter situation, the failure to pay the maintenance fee and surcharge on the next succeeding day that is not a Saturday, Sunday, or a Federal holiday within the District of Columbia will result in the patent expiring on a date (4, 8, or 12 years after the date of grant) earlier than the last date on which the maintenance fee and surcharge could be paid. This situation results from the provisions of 35 U.S.C. 21, but those provisions do not extend the expiration date of the patent if the maintenance fee and any required surcharge are not paid when required. For example, if the grace period for paying a maintenance fee with a surcharge ended on a Saturday, the maintenance fee and surcharge could be paid on the next succeeding business day, e.g., Monday, but the patent will have expired at midnight on Saturday if the maintenance fee and surcharge were

tion. In order to avoid the issuance of two patents to the same patentable invention, the examiner should take steps to propose an interference between the application and the patent.

If the application contains at least one allowable claim drawn to the same patentable invention as at least one patent claim, the examiner may propose the interference by proceeding as described in MPEP § 2309.

If the application discloses, but does not claim, an invention claimed in the patent, the examiner should suggest a claim or claims to the applicant (see MPEP § 2305), and include a statement that failure of the applicant to make the claim or claims will be taken as a concession that the subject matter of the claim or claims is the prior invention of another. Form Paragraphs 23.09 and 23.10 should be used for this purpose.

¶ 23.09 Requirement To Copy Patent Claim

The following claim number **[1]** from U.S. Patent No. **[2]** is suggested to applicant under 35 U.S.C. 135(a) for the purposes of an interference:

[3]

The suggested claim must be copied exactly, although other claims may be proposed under 37 CFR 1.605(a).

Applicant is given ONE MONTH or THIRTY DAYS, whichever is longer, from the mailing date of this communication to copy this patent claim. Failure to do so will be considered a concession that the subject matter of this claim is the prior invention of another under 35 U.S.C. 102(g), and thus also prior art under 35 U.S.C. 103(a) (*In re Oguie*, 517 F.2d 1382, 186 USPQ 227 (CCPA 1975)), but will **not** result in the abandonment of this application. THE PROVISIONS OF 37 CFR 1.136 DO **NOT** APPLY TO THE TIME SPECIFIED IN THIS ACTION.

Examiner Note:

1. In bracket 1, insert the number from the patent of the suggested claim.
2. In bracket 2, insert the number of the patent.
3. In bracket 3, insert a copy of the patent claim.
4. Only one claim from the patent should be suggested for interference unless other claims to a separate patentably distinct invention are claimed in the patent and can be made by the applicant. To suggest an additional claim, form paragraph 23.10 should follow this paragraph.
5. If the Office action addresses other issues, such as a rejection of other claims, form paragraph 23.07 should be included at the end of the Office action.

¶ 23.10 Copying Additional Patent Claims for a Distinct Invention

Claim number **[1]** from U.S. Patent No. **[2]** is suggested under 35 U.S.C. 135(a) in addition to claim **[3]** of the patent, suggested above. The inventions defined by these patent claims are considered to be "separate patentable inventions" under 37 CFR 1.601(n) which could form the basis for plural counts in an interference.

The suggested claim, reproduced below, must be copied exactly, although other claims may be proposed under 37 CFR 1.605(a).

[4]

Applicant is given ONE MONTH or THIRTY DAYS, whichever is longer, from the mailing date of this communication to copy this additional patent claim. Failure to do so will be considered a concession that the subject matter of this claim is the prior invention of another under 35 U.S.C. 102(g), and thus also prior art under 35 U.S.C. 103(a) (*In re Oguie*, 517 F.2d 1382,186 USPQ 227 (CCPA 1975)). THE PROVISIONS OF 37 CFR 1.136 DO **NOT** APPLY TO THE TIME SPECIFIED IN THIS ACTION.

Examiner Note:

1. In bracket 1, insert the number of the patent claim that is patentably distinct from the claim specified in form paragraph 23.09.
2. This paragraph must follow form paragraph 23.09 and should only be used in those rare instances where both the patent and the application claim distinct, interfering inventions.

2307 Applicant Requests Interference With a Patent

37 CFR 1.607. Request by applicant for interference with patent.

(a) An applicant may seek to have an interference declared between an application and an unexpired patent by,

(1) Identifying the patent,

(2) Presenting a proposed count,

(3) Identifying at least one claim in the patent corresponding to the proposed count,

(4) Presenting at least one claim corresponding to the proposed count or identifying at least one claim already pending in its application that corresponds to the proposed count, and, if any claim of the patent or application identified as corresponding to the proposed count does not correspond exactly to the proposed count, explaining why each such claim corresponds to the proposed count, and

(5) Applying the terms of any application claim,

(i) Identified as corresponding to the count, and

(ii) Not previously in the application to the disclosure of the application.

(6) Explaining how the requirements of 35 U.S.C. 135(b) are met, if the claim presented or identified under paragraph (a)(4) of this section was not present in the application until more than one year after the issue date of the patent.

(b) When an applicant seeks an interference with a patent, examination of the application, including any appeal to the Board, shall be conducted with special dispatch within the Patent and Trademark Office. The examiner shall determine whether there is interfering subject matter claimed in the application and the patent which is patentable to the applicant subject to a judgment in an interference. If the examiner determines that there is any interfering subject matter, an interference will be declared. If the exam-

Chapter 2500 Maintenance Fees

2501 Introduction
2501 Introduction
2504 Patents Subject to Maintenance Fees
2506 Times for Submitting Maintenance Fee Payments
2510 Submission of Maintenance Fee Documents
2515 Information Required for Submission of Maintenance Fee Payment
2520 Maintenance Fee Amounts
2522 Methods of Payment
2530 Informalities
2540 Fee Address for Maintenance Fee Purposes
2542 Change of Correspondence Address
2550 Small Entity Status
2560 Revocation of Power of Attorney and Withdrawal of Attorney
2570 Status Requests
2575 Notices
2580 Review of Decision Refusing to Accept and Record Payment of a Maintenance Fee Filed Prior to Expiration of Patent
2590 Acceptance of Delayed Payment of Maintenance Fee in Expired Patent to Reinstate Patent
2591 Intervening Rights in Reinstated Patents

2501 Introduction

35 U.S.C. 41. Patent fees; patent and trademark search systems.

*****

(b) The Director shall charge the following fees for maintaining in force all patents based on applications filed on or after December 12, 1980:

(1) 3 years and 6 months after grant, $830 [$850].

(2) 7 years and 6 months after grant, $1,900 [$1,950].

(3) 11 years and 6 months after grant, $2,910 [$2,990].

Unless payment of the applicable maintenance fee is received in the Patent and Trademark Office on or before the date the fee is due or within a grace period of six months thereafter, the patent will expire as of the end of such grace period. The Director may require the payment of a surcharge as a condition of accepting within such 6-month grace period the payment of an applicable maintenance fee. No fee may be established for maintaining a design or plant patent in force.

(c)(1)The Director may accept the payment of any maintenance fee required by subsection (b) of this section which is made within twenty-four months after the six-month grace period if the delay is shown to the satisfaction of the Director to have been unintentional, or at any time after the six-month grace period if the delay is shown to the satisfaction of the Director to have been unavoidable. The Director may require the payment of a surcharge as a condition of accepting payment of any maintenance fee after the six-month grace period. If the Director accepts payment of a maintenance fee after the six-month grace period, the patent shall be considered as not having expired at the end of the grace period.

(2) A patent, the term of which has been maintained as a result of the acceptance of a payment of a maintenance fee under this subsection, shall not abridge or affect the right of any person or that person's successors in business who made, purchased, offered to sell, or used anything protected by the patent within the United States, or imported anything protected by the patent into the United States after the 6-month grace period but prior to the acceptance of a maintenance fee under this subsection, to continue the use of, to offer for sale, or to sell to others to be used, offered for sale, or sold, the specific thing so made, purchased, offered for sale, used, or imported. The court before which such matter is in question may provide for the continued manufacture, use, offer for sale, or sale of the thing made, purchased, offered for sale, or used within the United States, or imported into the United States, as specified, or for the manufacture, use, offer for sale, or sale in the United States of which substantial preparation was made after the 6-month grace period but before the acceptance of a maintenance fee under this subsection, and the court may also provide for the continued practice of any process that is practiced, or for the practice of which substantial preparation was made, after the 6-month grace period but before the acceptance of a maintenance fee under this subsection, to the extent and under such terms as the court deems equitable for the protection of investments made or business commenced after the 6-month grace period but before the acceptance of a maintenance fee under this subsection.

*****

Note: The fees in brackets in 35 U.S.C. 41(b) as reproduced above are the fees that went into effect on October 1, 2000. See 37 CFR 1.20(e)-(g) for the current fee amounts.

Public Law 96-517, enacted December 12, 1980, established the requirement to pay maintenance fees for applications filed on or after that date. The statutory provisions regarding maintenance fees have been subsequently modified by Public Law 97-247, enacted August 27, 1982; Public Law 98-622, enacted November 8, 1984; Public Law 102-204, enacted December 10, 1991; Public Law 102-444, enacted October 23, 1992; Public Law 105-358, enacted November 10, 1998; and Public Law 106-113, enacted November 29, 1999.

STATUS AND ENTITY DIVISION

The Status and Entity Division provides specialized advice and guidance to the public on maintenance fee matters.

The Status and Entity Division determines the proper status of issued patents which are subject to

Applicant has failed to specifically apply each limitation or element of each of the copied claim(s) to the disclosure of the application.

Applicant is given ONE MONTH or THIRTY DAYS, whichever is longer, to specifically apply each limitation or element of each of the copied claim(s) to the disclosure of the application. THE PROVISIONS OF 37 CFR 1.136 DO **NOT** APPLY TO THE TIME SPECIFIED IN THIS ACTION.

2307.01 Presentation of Claims Corresponding to Patent Claims Not a Reply to Last Office Action

The presentation of claims corresponding to claims of a patent when not suggested by the Office does not constitute a reply to the last Office action unless the last Office action relied solely on the patent for the rejection of all the claims rejected in that action.

2307.02 Rejection of Claims Corresponding to Patent Claims

When claims corresponding to claims of a patent are presented, the application is taken up at once and the examiner must determine whether the presented claims are unpatentable to the applicant on any ground(s), e.g., under 35 U.S.C. 102, 35 U.S.C. 103, 35 U.S.C. 112, 35 U.S.C. 135(b), double patenting, etc. If at least one of the presented claims is not rejectable on any such ground and is claiming the same invention as at least one claim of the patent, the examiner should proceed to propose an interference.

If all of the claims presented are rejectable on any grounds, they should be so rejected. The ground of rejection of the claims presented may or may not be one which would also be applicable to the corresponding claims in the patent. If the ground of rejection is also applicable to the corresponding claims in the patent, any letter including the rejection must have the approval of the TC Director. See MPEP § 1003. Examples of grounds of rejection which would not also be applicable to the patent are double patenting, insufficient disclosure in the application, a reference whose date is junior to that of the patent, or a bar under 35 U.S.C. 135(b) (see MPEP § 2307).

The examiner should not proceed to propose an interference where the examiner is aware of a reference or other ground of unpatentability for the application claims which correspond to the patent claims, even if the ground of unpatentability would also be applicable to the patent claims. Although an applicant may wish to have his or her application placed in interference with a patent in order to raise a ground of unpatentability against the patent claims, an interference will not be proposed unless at least one of the claims in the application corresponding to the claims of the patent is allowable.

If the patent has a filing date earlier than the application effective filing date, see MPEP § 2308.01.

37 CFR 1.607(b) requires that "[w]hen an applicant seeks an interference with a patent, examination of the application, including any appeal to the Board, shall be conducted with special dispatch within the Patent and Trademark Office." Therefore, when all the claims presented are rejected the examiner sets a time limit for reply, not less than 30 days, and all subsequent actions, including action of the Board on appeal, are special. Failure by the applicant to reply or appeal within the time limit, will, in the absence of a satisfactory showing, be deemed a disclaimer of the invention claimed.

While the time limit for an appeal from the final rejection of a claim corresponding to a patent claim is usually set under the provisions of 37 CFR 1.607(b), where the remainder of the application is ready for final action, it may be advisable to set a shortened statutory period for the entire application in accordance with 37 CFR 1.134.

There is an important distinction between a limited time for reply under 37 CFR 1.607(b) and a shortened statutory period under 37 CFR 1.134. The penalty resulting from failure to reply within the time limit under 37 CFR 1.607(b) is loss of the claim or claims involved, on the doctrine of disclaimer, and this is appealable; while failure to reply within the set statutory period (37 CFR 1.134) results in abandonment of the entire application. This is not appealable.

The rejection of claims presented for interference with a patent sometimes creates a situation where two different periods for reply are running against the application - one, the statutory period dating from the last full action on the application; the other, the limited period set for the reply to the rejection (either first or final) of the presented claims. This situation should be avoided where possible, for example, by setting a shortened period for the entire application, but where

```
agc ttg tct ttc aaa tgg cct gga ttt tgt ttg ttt gtt tgtttgctc     403
Ser Leu Ser Phe Lys Trp Pro Gly Phe Cys Leu Phe Val
                10                  15

<210> 2
<211> 18
<212> PRT
<213> Paramecium aurelia

<400> 2

Met Val Ser Met Phe Ser Leu Ser Phe Lys Trp Pro Gly Phe Cys Leu
1               5                   10                  15

Phe Val
```

2434 Examination of Patent Applications Claiming Large Numbers of Nucleotide Sequences

The U.S. Patent and Trademark Office published its policy for the examination of patent applications that claim large numbers of nucleotide sequences in the *Official Gazette*, 1192 O.G. 68 (November 19, 1996). Nucleotide sequences encoding different proteins are structurally distinct chemical compounds and are unrelated to one another. These sequences are thus deemed to normally constitute independent and distinct inventions within the meaning of 35 U.S.C. 121. Absent evidence to the contrary, each such nucleotide sequence is presumed to represent an independent and distinct invention, subject to a restriction requirement pursuant to 35 U.S.C. 121 and 37 CFR 1.141. In establishing the new policy, the Commissioner has partially waived the requirements of 37 CFR 1.141 and will permit a reasonable number of such nucleotide sequences to be claimed in a single application. Under this policy, in most cases, up to 10 independent and distinct nucleotide sequences will be examined in a single application without restriction.Those sequences which are patentably indistinct from the sequences selected by the applicant will also be examined. Nucleotide sequences encoding the same protein are not considered to be independent and distinct and will continue to be examined together. In some exceptional cases, the complex nature of the claimed material may necessitate that the reasonable number of sequences to be selected be less than 10. In other cases, applicants may petition pursuant to 37 CFR 1.181 for examination of additional nucleotide sequences by providing evidence that the different nucleotide sequences do not cover independent and distinct inventions. For examples of typical nucleotide sequence claims and additional information on the search and examination procedures, see the above cited O.G. Notice. See also MPEP § 803.04.

2435 Publishing of Patents and Patent Application Publications with Lengthy Sequence Listings

Due to the high cost and limited usefulness of the printed paper or composed electronic image versions of nucleotide and/or amino acid sequences, if the "Sequence Listing" portion is lengthy (i.e., at least 600 Kb (about 300 typed pages)), it will no longer be printed with the paper and composed electronic image (page image) versions of patents and patent application publications. The "Sequence Listing" will only be published in electronic form and will be available on the USPTO sequence homepage (http://seqdata.uspto.gov) as an ASCII text file.

Neither the paper copies of patents and patent application publications that are in the search rooms nor those sold through the Office of Public Records, Certification Division, will include a sequence listing if the sequence listing is not included in the composed

AFTER NOTICE OF ALLOWANCE

When an amendment which includes one or more claims presented to provoke an interference with a patent is received after the Notice of Allowance and the examiner finds one or more of the claims patentable to the applicant and an interference to exist, the examiner should prepare a letter, requesting that the application be withdrawn from issue for the purpose of interference. This letter, which should designate the claims to be involved, together with the file and the proposed amendments, should be sent to the TC Director.

When an amendment which includes one or more claims presented to provoke an interference with a patent is received after Notice of Allowance, and the examiner finds basis for refusing the interference on any ground, the examiner should make an oral report to the supervisory patent examiner of the reasons for refusing the requested interference. Notification to applicant is made on Form PTOL-271 if the entire amendment or a portion of the amendment (including all the presented claims) is refused. Form Paragraph 23.01 should be employed to express the adverse recommendation as to the entry of the presented claims.

¶ 23.01 Entry of Claims Disapproved

Entry of claim **[1]** disapproved because **[2]**. This application will not be withdrawn from issue.

Examiner Note:

In bracket 2, insert brief statement of basic reasons for disapproval. See MPEP § 2307.03.

2307.04 Presentation of Claims for Interference With a Patent Involved in a Reexamination Proceeding

An interference will not be proposed for a patent which is involved in a reexamination proceeding except upon specific authorization from the Office of the Deputy Commissioner for Patent Examination Policy. Claims which would interfere with the patent may be rejected on any applicable ground, including, if appropriate, the prior art cited in the reexamination proceeding. See MPEP § 2307.02. Prosecution of the application should continue as far as possible, but if the application is placed in condition for allowance and still contains claims which interfere with the patent under reexamination, further action on the application should be suspended until the reexamination proceeding is terminated. See MPEP § 2284.

Form paragraph 23.16 may be used to notify applicant that the prosecution of the application is suspended until the reexamination proceeding of the patent with the conflicting claims is terminated.

¶ 23.16 Patent Claims Undergoing Reexamination

This application contains claims which conflict with the claims of U.S. Patent No. **[1]**, now involved in a reexamination proceeding.

Prosecution in this application is SUSPENDED until termination of the reexamination proceeding.

Applicant should inquire as to the status of this application SIX MONTHS from the date of this letter.

Examiner Note:

This paragraph should only be used when the application is otherwise in condition for allowance.

2307.05 Corresponding Patent Claims Not Identified

37 CFR 1.607(c) requires that "[w]hen an applicant presents a claim which corresponds exactly or substantially to a claim of a patent, the applicant shall identify the patent and the number of the patent claim, unless the claim is presented in response to a suggestion by the examiner."

This requirement of 37 CFR 1.607(c) applies to claims presented in an application at the time of filing as well as to claims presented in an amendment to a pending application. If an applicant, attorney, or agent presents a claim corresponding exactly or substantially to a patent claim without complying with 37 CFR 1.607(c), the examiner may be led into making an action different from what would have been made had the examiner been in possession of all the facts. Therefore, failure to comply with 37 CFR 1.607, when presenting a claim corresponding to a patent claim, may result in the issuance of a requirement for information as to why an identification of the source of the claim was not made. Also see 37 CFR 10.23(c)(7).

The examiner should require the applicant to supply a full identification of the copied patent claims by using Form Paragraph 23.11.

¶ 23.11 Failure To Identify Source of Patent Claims

Claim **[1]** of this application **[2]** apparently been copied from a U.S. patent without being suggested by the examiner. The patent

PatentIn 2.1 and looks and feels more like other Windows-based programs. Unlike PatentIn 2.1, projects are portable from one computer to another provided PatentIn 3.0 is installed. From a programming viewpoint, the advantages include that the overall lines of code have been reduced to 25 percent of that required by PatentIn 2.1, maintenance of the code is easier since it is written in Visual C++ and it is easier to modify the code.

In March of 2001 PatentIn 3.1 was released. This newest version builds on the success of PatentIn 3.0 and expands its capabilities. One difference is that the capability to import a single sequence from a single file without a header has been added. The definition of variable characters has been enhanced in PatentIn 3.1. If the nucleotide sequence has the variable "n" and the CDS feature is selected, PatentIn 3.1 will calculate the position of the necessary Xaa in the supplemental protein sequence and provide the definition automatically based on the codon in which the "n" appears.

PatentIn version 3.1, and the companion User's Manual, are available on the Office World Wide Web site (www.uspto.gov) for free downloading. Copies of both the program and the user manual may also be purchased from the Office on 3 1/2-inch floppy diskette or compact disc. PatentIn 3.1 operates in a Windows 95/98/NT/2000 environment and has similar space, memory and system requirements as those for PatentIn version 3.0. A minimum of 64 MB of memory is recommended for smaller projects. Otherwise 128 MB is recommended. Even more additional memory may be required for larger sequence listings. The disk space required to install PatentIn 3.0 is 1.6 MB. Additional disk space is required to store project files and sequence listing files.

See MPEP § 1730 for additional information regarding ordering and using PatentIn.

While use of the PatentIn program is not required for compliance with the sequence rules, its use is highly recommended as Office experience has shown that submissions developed with PatentIn are far less likely to include errors than those developed without the program. The many automatic features of the PatentIn program also greatly ease the generation of Sequence Listings when compared to generating them by hand in a word processing environment. This is especially true for Sequence Listings that include many sequences and/or sequences having great lengths.

The Office provides hands-on training in the use of the PatentIn and associated utilities programs. The classes are held in Washington D.C. as demand warrants. In addition, on site training may be arranged at locations outside Washington, D.C. To express interest in such classes, please contact the Search and Information Resources Administration.

2431 Sample Sequence Listing

A sample "Sequence Listing" is included below.

It is anticipated that patentees may make inquiries as to the status of the application after the first notification has been received. Since the Techonology Center (TC) having responsibility for the application will be indicated on the letter and the letter will not contain any information pertaining to that application, it will be necessary for each TC to establish and maintain some type of permanent record. The type of permanent record is left to the discretion of the TC Director. This permanent record must be independent of the application file and the patented file in order to provide adequate information for patentee inquiries relative to nonreceipt of either a second notice or a notice of declaration of interference either before or after either is mailed from the United States Patent and Trademark Office. Additionally, the permanent record must associate the appropriate patent number and the application number. This record could be a separate TC file for 37 CFR 1.607(d) notices sent to patentees having appropriate identification of the patent and application.

In summary, a 37 CFR 1.607(d) notice (Form Paragraph 23.20) is prepared by a person in the TC having jurisdiction over the application attempting to provoke an interference with a patent. The original is placed of record in the patented file, one copy is sent to the patentee, and an entry is made in the permanent TC record for 37 CFR 1.607(d) notices.

If a final decision is made that no interference will be declared, a primary examiner will prepare and sign a 37 CFR 1.607(d) notice (Form Paragraph 23.21). The original of this notice is entered of record in the patented file, one copy is sent to the patentee, and another entry is made in the permanent record for 37 CFR 1.607(d) notices. If an interference is to be instituted, the declaration of interference notice will be sent by an administrative patent judge and no additional form will be sent by the examiner.

Although the permanent record for 37 CFR 1.607(d) notices includes identification both of the patent and application, the patentee cannot and should not be given any information concerning the party or application attempting to provoke an interference unless and until an interference is declared. 35 U.S.C. 122.

2308 Interference Between an Application and a Patent; *Prima Facie* Showing by Applicant

37 CFR 1.608. Interference between an application and a patent; prima facie showing by applicant.

(a) When the effective filing date of an application is three months or less after the effective filing date of a patent, before an interference will be declared, either the applicant or the applicant's attorney or agent of record shall file a statement alleging that there is a basis upon which the applicant is entitled to a judgment relative to the patentee.

(b) When the effective filing date of an application is more than three months after the effective filing date of a patent, the applicant, before an interference will be declared, shall file evidence which may consist of patents or printed publications, other documents, and one or more affidavits which demonstrate that applicant is *prima facie* entitled to a judgment relative to the patentee and an explanation stating with particularity the basis upon which the applicant is *prima facie* entitled to the judgment. Where the basis upon which an applicant is entitled to judgment relative to a patentee is priority of invention, the evidence shall include affidavits by the applicant, if possible, and one or more corroborating witnesses, supported by documentary evidence, if available, each setting out a factual description of acts and circumstances performed or observed by the affiant, which collectively would *prima facie* entitle the applicant to judgment on priority with respect to the effective filing date of the patent. To facilitate preparation of a record (§ 1.653(g)) for final hearing, an applicant should file affidavits on paper which is 21.8 by 27.9 cm. (8 1/2 x 11 inches). The significance of any printed publication or other document which is self-authenticating within the meaning of Rule 902 of the Federal Rules of Evidence or § 1.671(d) and any patent shall be discussed in an affidavit or the explanation. Any printed publication or other document which is not self-authenticating shall be authenticated and discussed with particularity in an affidavit. Upon a showing of good cause, an affidavit may be based on information and belief. If an examiner finds an application to be in condition for declaration of an interference, the examiner will consider the evidence and explanation only to the extent of determining whether a basis upon which the application would be entitled to a judgment relative to the patentee is alleged and, if a basis is alleged, an interference may be declared.

Under 37 CFR 1.608, an applicant seeking to provoke an interference with a patent is required to submit evidence which demonstrates that the applicant is *prima facie* entitled to a judgment relative to the patentee. Evidence must be submitted when the effective filing date of the application is more than 3 months after the effective filing date of the patent. The evidence may relate to patentability and need not be restricted to priority, but if the evidence shows that

—If a word processing program is used to generate a "Sequence Listing," hard page break controls should not be used and margins should be adjusted to the smallest setting.

—Word processing files should not be submitted to the Office; the Sequence Listing generated by a word processing file should be saved as an ASCII text file for submission. Most word processing programs provide this feature.

—Statements in accordance with 37 CFR 1.821(f), (g), (h) and 37 CFR 1.825 and proper labeling in accordance with 37 CFR 1.824(a)(6) should be noted. Sample statements to support filings and submissions in accordance with 37 CFR 1.821 through 1.825 are provided in MPEP § 2428 Sample Statements.

—Use Box SEQUENCE.

—Three and a half inch disks are less fragile than five and a quarter inch disks.

—On nucleotide sequences, since only single strands may be depicted in the "Sequence Listing," show strands in 5′ to 3′ direction.

—The single stranded nucleotide depicted in the "Sequence Listing" may represent a strand of a nucleotide sequence that may be single or double stranded which may be, further, linear or circular. An amino acid sequence or peptide may be linear or circular. In some instances, a sequence may be both single stranded and double stranded and/or both linear and circular. The response "not relevant" is also an acceptable response for both "Strandedness" and "Topology."

—Numeric identifiers "<140>, Current Application Number," "<141>, Current Filing Date," "<150>, Prior Application Number," and "<151>, Prior Application Filing Date," should appear in the "Sequence Listing" in all cases. If the information about the current application is not known or is unavailable at the time of completing the Sequence Listing, then the lines following numeric identifiers <140> and <141> should be left blank. This would normally be the case when the "Sequence Listing" is included in a newly filed application. Similarly, if information regarding prior applications is inapplicable, or not known at the time of completing the "Sequence Listing" but will be later filed, then the numeric identifiers <150> and <151> should appear with the line following the numeric identifiers left blank.

—If you receive a Notice to Comply that should not have been sent to you, send a letter in the form of a request for reconsideration of the notice to the organization sending the notice.

—There are a limited number of mandatory items of information. They are identified in MPEP § 2424.02 Sequence Listing Numeric Identifiers.

—Figures can be used to convey information not readily conveyed by the Sequence Listing. The exclusive conformance requirement of 37 CFR 1.821(b) will be relaxed for drawing figures. However, the sequence information so conveyed must still be included in a "Sequence Listing" and the sequence identifier ("SEQ ID NO:X") must be used, either in the drawing or in the "Brief Description of the Drawings."

—Extra copies of computer readable forms should not be sent to examiners.

—Inosine may be represented by the use of "I" in the features section, otherwise use "n."

—Stop codons, represented by an asterisk, are not permitted in amino acid sequences.

—Punctuation should not be used in a sequence to indicate unknown nucleotide bases or amino acid residues nor should punctuation be used to delimit active or functional regions of a sequence. These regions should be noted as Features of the sequence per 37 CFR 1.823(b) (see numeric identifiers <220> - <223>.

—The presence of an unnatural amino acid in a sequence does not have the same effect as the presence of a D-amino acid. The sequence may still be subject to the rules even though one or more of the amino acids is not naturally occurring.

—Cyclic and branched peptides are causing some confusion in the application of the rules. Specific questions should be directed to Group 1650 personnel.

—A cyclic peptide with a tail is regarded as a branched sequence, and thereby exempt from the rules, if all bonds adjacent to the amino acid from which the tail emanates are normal peptide bonds.

—Sequences that have variable-length regions depicted as, for example, Ala Ala Leu Leu $(\text{Xaa Xaa})_n$ Ile Pro where n=0-234 or $\text{agccttgggaca}(\text{nnnnn})_m\text{gtcatt}$ where m=0-354 or Ser Met Ala Xaa Ser where Xaa could be 1, 2, 3, 4 <u>and/or</u> 5 amino acids must still comply with the Sequence Rules. The method to use

dates the applicant's by more than 3 months, should have in mind the provisions of 37 CFR 1.617, and especially the following:

(A) After these affidavits or declarations are forwarded by the primary examiner for the declaration of an interference, they will be examined by an administrative patent judge.

(B) If the affidavits or declarations fail to establish that applicant would *prima facie* be entitled to a judgment relative to the patentee, an order will be issued concurrently with the notice of interference, requiring applicant to show cause why summary judgment should not be entered against the applicant.

(C) Additional evidence in response to such order will not be considered unless justified by a showing under the provisions of 37 CFR 1.617(b). If the applicant responds, the applicant must serve the patentee and any other opponents with a copy of the original showing under 37 CFR 1.608(b) and of the response, and they will be entitled to present their views with respect thereto (37 CFR 1.617(d)).

(D) All affidavits or declarations submitted must describe acts which the affiants performed or observed, or circumstances observed, such as structure used and results of use or test, except on a proper showing as provided in 37 CFR 1.608(b). Statements of conclusion, for example, that the invention of the counts was reduced to practice, are generally considered to be not acceptable. It should also be kept in mind that documentary exhibits which are not self-authenticated must be authenticated and discussed with particularity by an affiant having direct knowledge of the matters involved. However, it is not necessary that the exact date of conception or reduction to practice be revealed in the affidavits, declarations, or exhibits if the affidavits or declarations aver observation of the necessary acts and facts, including documentation when available, before the patentee's effective filing date. On the other hand, where reliance is placed upon diligence, the affidavits or declarations and documentation should be precise as to dates from a date just prior to patentee's effective filing date. The showing should relate to the essential factors in the determination of the question of priority of invention as set out in 35 U.S.C. 102(g).

(E) The explanation required by 37 CFR 1.608(b) should be in the nature of a brief or of explanatory remarks accompanying an amendment. The explanation should set forth the manner in which the requirements of the counts are satisfied and how the requirements for conception, reduction to practice, or diligence are met, or otherwise explain the basis on which the applicant is *prima facie* entitled to a judgment.

(F) Published decisions of the Court of Appeals for the Federal Circuit, Court of Customs and Patent Appeals and the Board of Patent Interferences concerning the quantum of proof required by an applicant to make out a *prima facie* showing entitling the applicant to an award of priority with respect to the filing date of a patent so as to allow the interference to proceed, 37 CFR 1.617(a), second sentence, include *Schendel v. Curtis*, 83 F.3d 1399, 38 USPQ2d 1743 (Fed. Cir. 1996); *Hahn v. Wong*, 892 F.2d 1028, 13 USPQ2d 1313 (Fed. Cir. 1989); *Wetmore v. Quick*, 536 F.2d 937, 190 USPQ 223 (CCPA 1976); *Golota v. Strom*, 489 F.2d 1287, 180 USPQ 396 (CCPA 1974); *Schwab v. Pittman*, 451 F.2d 637, 172 USPQ 69 (CCPA 1971); *Kistler v. Weber*, 412 F.2d 280, 162 USPQ 214 (CCPA 1969); *Azar v. Burns*, 188 USPQ 601 (Bd. Pat. Int. 1975); *Horvitz v. Pritchard*, 182 USPQ 505 (Bd. Pat. Int. 1974); and *Murphy v. Eiseman*, 166 USPQ 149 (Bd. Pat. Int. 1970).

As noted above, the evaluation of a showing under 37 CFR 1.608(b) is made by an administrative patent judge. However, when a showing under 37 CFR 1.608(b) is filed, the examiner must inspect it to determine whether the applicant is relying upon prior invention or unpatentability as a basis for the showing. If the applicant alleges prior invention, the examiner should merely determine that (A) at least one date prior to the effective filing date of the patent is alleged and (B) the showing contains at least one affidavit or declaration by a corroborating witness, i.e., by someone other than a named inventor. If these conditions are met the examiner should proceed to propose the interference as described in MPEP § 2309. If the showing is based on alleged unpatentability of the patent claim or claims, the examiner should determine whether any ground of unpatentability alleged is such that it would also apply to the applicant; for example, if the applicant alleges that the claims of the patent are statutorily barred by a reference which would also be a bar to the applicant. If the examiner finds that an alleged ground of unpatentability would also apply to the applicant, the interference

UNITED STATES DEPARTMENT OF COMMERCE
Patent and Trademark Office
Address: COMMISSIONER OF PATENTS AND TRADEMARKS
Washington, D.C. 20231

APPLICATION NUMBER	FILING/RECEIPT DATE	FIRST NAMED APPLICANT	ATTY. DOCKET NO./TITLE

DATE MAILED:

NOTICE TO COMPLY WITH REQUIREMENTS FOR PATENT APPLICATIONS CONTAINING NUCLEOTIDE SEQUENCE AND/OR AMINO ACID SEQUENCE DISCLOSURES

The nucleotide and/or amino acid sequence disclosure contained in this application does not comply with the requirements for such a disclosure as set forth in 37 CFR 1.821–1.825 for the following reason(s):

☐ 1. This application fails to comply with the requirements of 37 CFR 1.821–1.825.

☐ 2. This application does not contain, as a separate part of the disclosure on paper copy, a "Sequence Listing" as required by 37 CFR 1.821(c).

☐ 3. A copy of the "Sequence Listing" in computer readable form has not been submitted as required by 37 CFR 1.821(e).

☐ 4. A copy of the "Sequence Listing" in computer readable form has been submitted. The content of the computer readable form, however, does not comply with the requirements of 37 CFR 1.822 and/or 1.832, as indicated on the attached marked–up copy of the "Raw Sequence Listing."

☐ 5. The computer readable form that has been filed with this application has been found to be damaged and/or unreadable as indicated on the attached CRF Diskette Problem Report. A substitute computer readable form must be submitted as required by 37 CFR 1.825(d).

☐ 6. The paper copy of the "Sequence Listing" is not the same as the computer readable form of the "Sequence Listing" as required by 37 CFR 1.821(e).

☐ 7. OTHER:_____

APPLICANT MUST PROVIDE:

☐ An initial or substitute computer readable form (CRF) copy of the "Sequence Listing."
☐ An initial or substitute paper copy of the "Sequence Listing," as well as an amendment directing its entry into the specification.
☐ A statement that the content of the paper and computer readable copies are the same and, where applicable, include no new matter, as required by 37 CFR 1.821(e), 1.821(f), 1.821(g), 1.825(b) or 1.825(d).

FOR QUESTIONS REGARDING COMPLIANCE WITH THESE REQUIREMENTS, PLEASE CONTACT:

☐ For Rules Interpretation, call (703) 308–1123.
☐ For CRF submission help, call (703) 308–4212.
☐ For PatentIn software help, call (703) 308–6856.

Customer Service Center
Initial Patent Examination Division (703) 308–1202

FORM PTO–1661 (Rev. 7/97) **PART 1 – ATTORNEY/APPLICANT COPY**

A separate form is used for each count of the interference. The form need not be typed. If the count is identical to a claim of one of the parties, the number of that claim is circled. If the count is not identical to any claim of any of the parties, the count should be typed on a plain sheet and attached to the form.

The files to be included in the interference should be listed by last name (of the first listed inventor if application is joint), application number, filing date, and, if applicable, patent number and issue date.

The sequence in which the parties are listed on the form is completely immaterial. If the examiner has determined that a party is entitled to the benefit of the filing date of one or more applications (or patents) as to the counts, the blanks provided on the form for indicating this fact should be filled in as to all such applications. It is particularly important to list all intermediate applications necessary to provide continuity of pendency to the earliest benefit application to which a party is entitled.

An applicant may be accorded the benefit of a foreign application on the Form PTO-850 and the declaration notices only if the papers required by 37 CFR 1.55, including an English translation of the foreign application, have been filed and the primary examiner has determined that the applicant is in fact entitled to the benefit of such application. In addition, for utility or plant applications filed on or after November 29, 2000, the applicant must submit the priority claim within the time required by 37 CFR 1.55(a)(1) or file a grantable petition, including the surcharge set forth in 37 CFR 1.17(t), for an unintentionally delayed priority claim under 37 CFR 1.55(c). A patentee may be accorded the benefit of the filing date of a foreign application in the notice of interference provided he or she has complied with the requirements of 37 CFR 1.55, has filed an English translation, if required, and the primary examiner has determined that at least one species within the count involved in the interference is supported by the disclosure of the foreign application.

All claims in each party's application or patent must be listed in the spaces provided on the form as either corresponding or not corresponding to the count. A claim corresponds to a count if, considering the count as prior art, the claim would be unpatentable over the count under 35 U.S.C. 102 or 35 U.S.C. 103. If the examiner is in doubt as to whether a party's claim does or does not correspond to a count, it should be listed as corresponding to the count. If the party disagrees with this listing, a motion may be filed under 37 CFR 1.633(c)(4) during the interference to designate the claim as not corresponding to the count.

Note that for each count, every claim in a party's application or patent must be designated as either corresponding or not corresponding to the count; this includes any claims of the application which may be under rejection. For every claim of an application which is listed on the form, the examiner must indicate whether or not that claim is allowable by writing its number in either the "patented or patentable pending claims" box or the "unpatentable pending claims" box on the form. All patent claims and at least one of the application claims designated as corresponding to the count must be listed in the "patented or patentable pending claims" box.

If an involved application or patent contains multiple dependent claims, the examiner should be careful to indicate which embodiments of each multiple dependent claim correspond or do not correspond to each count. An embodiment of a multiple dependent claim should not be circled on form PTO-850 as being the count, but rather, the embodiment should be written out in independent form in the space provided.

After Form PTO-850 is filled out for each count of the proposed interference, it must be signed by the primary examiner and an Interference Practice Specialist in the space provided. The form must also be signed by the TC Director, if the TC Director's approval is required (as when the interference involves two applications whose effective filing dates are more than 6 months apart).

The examiner should keep a copy of the form or forms and all attachments for his/her records.

If two of the parties have the same attorney or agent, the examiner will in a separate memorandum call the attention of the Board to that fact when the Interference Initial Memorandum is forwarded. The administrative patent judge, when the interference is declared, can then take such action as may be appropriate under 37 CFR 1.613(b).

1. Use this form paragraph **only for the initial communication to the applicant**. Use either form paragraph 24.03 or 24.04 for subsequent communications.

2. Conclude action with appropriate form paragraph(s) 7.100-7.102.

3. When mailing the Office action, attach the CRF Diskette Problem Report.

¶ 24.03 Compact Disc/CRF Submission Is Not Fully Responsive, Bona Fide Attempt

The reply filed **[1]** is not fully responsive to the Office communication mailed **[2]** for the reason(s) set forth below or on the attached Notice To Comply With The Sequence Rules or CRF Diskette Problem Report.

Since the above-mentioned reply appears to be *bona fide*, applicant is given a TIME PERIOD of **ONE (1) MONTH** or **THIRTY (30) DAYS** from the mailing date of this notice, whichever is longer, within which to supply the omission or correction in order to avoid abandonment. EXTENSIONS OF THIS TIME PERIOD MAY BE GRANTED UNDER 37 CFR 1.136(a).

Examiner Note:

1. This form paragraph may be used whether or not the six-month period for reply has expired. It is intended for use whenever a **bona fide** reply has been submitted. This practice does not apply where there has been a deliberate omission of some necessary part of a complete reply or where the reason the reply is incomplete cannot be characterized as an apparent oversight or apparent inadvertence. Under such cases the examiner has no authority to grant an extension if the six-month period for reply has expired. Use form paragraph 24.04 under such circumstances.

2. In bracket 1, insert the date of the reply and in bracket 2, insert the mail date of the communication requiring compliance.

3. When mailing the Office action, attach a Notice To Comply With Requirements For Patent Applications Containing Nucleotide Sequence And/Or Amino Acid Sequence Disclosures, if any, along with a marked-up copy of the Raw Sequence Listing, or CRF Diskette Problem Report.

4. See 37 CFR 1.135(c), 1.821(g); MPEP §§ 710.02(c), 711.02(a), 714.02 and 714.03.

¶ 24.04 Compact Disc/CRF Submission Is Not Fully Responsive

The communication filed **[1]** is not fully responsive to the communication mailed **[2]** for the reason(s) set forth below or on the attached Notice To Comply With The Sequence Rules or CRF Diskette Problem Report.

If a complete reply has not been submitted by the time the shortened statutory period set in the communication mailed **[3]** has expired, this application will become abandoned unless applicant corrects the deficiency and obtains an extension of time under 37 CFR 1.136(a). In no case may an applicant extend the period for reply beyond the SIX MONTH statutory period.

Examiner Note:

1. This form paragraph may not be used when the six month period for reply has expired. Use this form paragraph in the situation where, in the reply (within the six-months), there has been a deliberate omission of some necessary part of a complete reply. When the reply appears to be bona fide, but through an apparent oversight or inadvertence failed to provide a complete reply, use form paragraph 24.03.

2. In bracket 1, insert the date of the reply and in brackets 2 and 3, insert the mail date of the communication requiring compliance.

3. When mailing the Office action, attach a Notice To Comply With Requirements For Patent Applications Containing Nucleotide Sequence And/Or Amino Acid Sequence Disclosures, if any, along with a marked-up copy of the Raw Sequence Listing, or CRF Diskette Problem Report.

¶ 24.05 CD-ROM/CD-R Requirements (Missing Sequence Listing/CRF Statement)

This application is objected to because it does not include the statement "the sequence listing information recorded in computer readable form is identical to the written (on paper or compact disc) sequence listing" and, where applicable, a statement that the submission includes no new matter, as required by 37 CFR 1.821(e), 1.821(f), 1.821(g), 1.825(b) or 1.825(d). Correction is required.

Examiner Note:

Use this form paragraph when there is no statement in the transmittal letter stating that the sequence listing information recorded in the CRF is identical to the written sequence listing

¶ 24.05.01 CD-ROM/CD-R Requirements (Missing Sequence Listing/CRF Statement in an Amendment Filed with a CRF)

The amendment filed **[1]** is objected to because it does not include the statement "the sequence listing information recorded in computer readable form is identical to the written (on paper or compact disc) sequence listing" and, where applicable, a statement that the submission includes no new matter, as required by 37 CFR 1.821(e), 1.821(f), 1.821(g), 1.825(b) or 1.825(d). A statement that the sequence listing information is identical is required.

Examiner Note:

1. Use this form paragraph when there is no statement in the transmittal letter stating that the sequence listing information recorded in the CRF is identical to the written sequence listing.

2. In bracket 1, insert the date of the amendment.

2309.03 Affidavits and Declarations Retained in File

When there are of record in the file of the application affidavits or declarations under 37 CFR 1.131 or 1.608, they should not be sealed but should be left in the file for consideration by the Board.

Affidavits and declarations under 37 CFR 1.131 and 1.608 are available for inspection by an opposing party to an interference after the preliminary motions under 37 CFR 1.633 are decided. See 37 CFR 1.612(b).

Affidavits or declarations in the file of a patent are not removed, inasmuch as they have been available to the public since the date the patent issued.

2309.06 Interfering Subject Matter in "Secrecy Order" Cases

37 CFR 5.3. Prosecution of application under secrecy order; withholding patent.

*****

(b) An interference will not be declared involving national applications under secrecy order. However, if an applicant whose application is under secrecy order seeks to provoke an interference with an issued patent, a notice of that fact will be placed in the file wrapper of the patent. (See § 1.607(d)).

*****

Since declaration of an interference gives immediate access to applications by opposing parties, no interference will be declared involving an application which has a secrecy order therein. See MPEP § 120 and § 130. Claims will be suggested, if necessary, so that all parties will be claiming the same patentable invention. See MPEP § 2303 - § 2305.04. When each application contains at least one claim to the same patentable invention, the following letter will be sent to all parties:

> Claims 1, 2, etc. (including the conflicting claims and claims not patentable over the application under secrecy order) conflict with those of another application. However, the secrecy order (of the other application/of your application) does not permit the declaration of an interference. Accordingly, action on the application is suspended for so long as this situation continues.
>
> Upon removal of the secrecy order and markings, if applicable, from all applications, an interference will be declared.

The letter should also indicate the allowability of the remaining claims, if any.

A notice that claims have been presented in an application under secrecy order for the purpose of interference with a patent should be placed in the patented file. Also, in accordance with 37 CFR 1.607(d), the patentee should be notified. See MPEP § 2307.06. The question of an interference is taken up upon termination of the secrecy order in the application in which patent claims are presented. The suggested notices should be modified accordingly.

The notices should be signed by the primary examiner. The copy of the notice retained separately in the TC should, in addition, contain the identification of the applications and patents involved and the interfering claims.

2311 Declaration of Interference

37 CFR 1.611. Declaration of interference.

(a) Notice of declaration of an interference will be sent to each party.

(b) When a notice of declaration is returned to the Patent and Trademark Office undelivered, or in any other circumstance where appropriate, an administrative patent judge may send a copy of the notice to a patentee named in a patent involved in an interference or the patentee's assignee of record in the Patent and Trademark Office or order publication of an appropriate notice in the *Official Gazette*.

(c) The notice of declaration shall specify:

(1) The name and residence of each party involved in the interference;

(2) The name and address of record of any attorney or agent of record in any application or patent involved in the interference;

(3) The name of any assignee of record in the Patent and Trademark Office;

(4) The identity of any application or patent involved in the interference;

(5) Where a party is accorded the benefit of the filing date of an earlier application, the identity of the earlier application;

(6) The count or counts and, if there is more than one count, the examiner's explanation why the counts define different patentable inventions;

(7) The claim or claims of any application or any patent which correspond to each count;

(8) The examiner's explanation as to why each claim designated as corresponding to a count is directed to the same patentable invention as the count and why each claim designated as not corresponding to any count is not directed to the same patentable invention as any count; and

(9) The order of the parties.

(d) The notice of declaration may also specify the time for:

(1) Filing a preliminary statement as provided in § 1.621(a);

writing the properly formatted file to one of the acceptable electronic media. If a given sequence and its associated information cannot practically or possibly fit on the electronic media required in 37 CFR 1.824(c), an exception via a non-fee petition to waive this provision will normally be granted. As set forth in 37 CFR 1.824(d), the computer readable forms that are submitted in accordance with these rules will not be returned to the applicant. 37 CFR 1.824(a)(6) requires the labeling, with appropriate identifying information, of the computer readable forms that are submitted in accordance with these rules.

2426 Amendments to or Replacement of Sequence Listing and Computer Readable Copy Thereof

37 CFR 1.825. Amendments to or replacement of sequence listing and computer readable copy thereof.

(a) Any amendment to a paper copy of the "Sequence Listing" (§ 1.821(c)) must be made by the submission of substitute sheets and include a statement that the substitute sheets include no new matter. Any amendment to a compact disc copy of the "Sequence Listing" (§ 1.821(c)) must be made by the submission of a replacement compact disc (2 copies) in compliance with § 1.52(e). Amendments must also be accompanied by a statement that indicates support for the amendment in the application, as filed, and a statement that the replacement compact disc includes no new matter.

(b) Any amendment to the paper copy of the "Sequence Listing," in accordance with paragraph (a) of this section, must be accompanied by a substitute copy of the computer readable form (§ 1.821(e)) including all previously submitted data with the amendment incorporated therein, accompanied by a statement that the copy in computer readable form is the same as the substitute copy of the "Sequence Listing."

(c) Any appropriate amendments to the "Sequence Listing" in a patent; *e.g.*, by reason of reissue or certificate of correction, must comply with the requirements of paragraphs (a) and (b) of this section.

(d) If, upon receipt, the computer readable form is found to be damaged or unreadable, applicant must provide, within such time as set by the Commissioner, a substitute copy of the data in computer readable form accompanied by a statement that the substitute data is identical to that originally filed.

37 CFR 1.825 sets forth the procedures for amending the "Sequence Listing" and the computer readable copy thereof. The procedures that have been defined in 37 CFR 1.825 involve the submission of either substitute sheets or substitute compact discs of the "Sequence Listing" or substitute copies of the computer readable form, in conjunction with statements that indicate support for the amendment in the application, as filed, and that the substitute sheets or copies include no new matter. (See MPEP § 608.05 and § 2428 for further information.) An amendment to the material on a compact disc must be done by submitting a replacement compact disc with the amended file(s). The amendment should include a corresponding amendment to the description of the compact disc and the files contained thereon in the paper portion of the specification. ***A replacement compact disc containing the amended files also must contain all of the files of the original compact disc that were not amended.*** This will insure that the Office, printer, and public can quickly access all of the current files in an application or patent by referencing only the latest compact disc.The requirement for statements regarding the absence of new matter follows current practice relating to the submission of substitute specifications, as set forth in 37 CFR 1.125. 37 CFR 1.825 (c) addresses the situation where amendments to the "Sequence Listing" are made after a patent has been granted, e.g., by a certificate of correction, reissue or reexamination. 37 CFR 1.825 (d) addresses the possibility and presents a remedy for the situation where the computer readable form may be found by the Office to be damaged or unreadable.

2427 Form Paragraphs and Notice to Comply

2427.01 Form Paragraphs

See MPEP § 608.05 for form paragraphs which should be used when notifying applicant that a compact disc submitted in accordance with 37 CFR 1.52(e) (i.e., containing a computer program listing, Sequence Listing, and/or table) does not comply with all of the requirements of the 37 CFR 1.52(e). See also MPEP § 608.05(b) for form paragraphs which should be used when a table submitted on compact disc does not comply with 37 CFR 1.52(e).

In order to expedite the processing of applications, minor errors pertaining to compliance with the sequence rules may be handled with the first Office action. Examples of minor errors are: when the "Sequence Listing" under 37 CFR 1.821(c) is submitted on compact disc, missing statement in the transmittal letter stating that the two compact discs are identical, missing an incorporation-by-reference of

(b) Ex parte prosecution as to specified matters may be continued concurrently with the interference with the consent of the administrative patent judge.

Under 37 CFR 1.615, upon declaration of an interference, *ex parte* prosecution of an application involved in the interference is suspended and any outstanding Office actions are considered as withdrawn by operation of the rule. *Ex parte Peterson*, 49 USPQ 119, 1941 C.D. 8 (Comm'r Pat. 1941). Upon termination of the interference, the examiner will reinstate the action treated as withdrawn by operation of 37 CFR 1.615 and set a shortened statutory period for reply.

The treatment of amendments filed during an interference is considered in detail in MPEP § 2364 - § 2364.01.

The approval of the administrative patent judge in charge of the interference must be obtained before undertaking any concurrent prosecution of the application.

2315.01 Suspension - Overlapping Applications

Where one of several applications of the same inventor or assignee which contain overlapping claims gets into an interference, the prosecution of all the cases not in the interference should be carried as far as possible, by treating as prior art the counts of the interference for the purpose of making provisional rejections and by insisting on proper lines of division or distinction between the applications. In some instances, suspension of action by the Office cannot be avoided. See MPEP § 709.01.

Where an application involved in an interference includes, in addition to the subject matter of the interference, a separate and divisible invention, prosecution of the second invention may be had during the pendency of the interference by filing a divisional application for the second invention or by filing a divisional application for the subject matter of the interference and moving to substitute the latter divisional application for the application originally involved in the interference. However, the application for the second invention may not be passed to issue if it contains claims broad enough to dominate matter claimed in the application involved in the interference.

¶ 23.17 Rejection Based on Count of an Interference

The rejection of claim [1] above based upon count [2] of Interference No. [3], to which applicant is a party, is a provisional rejection for the purpose of resolving all remaining issues in this application. The provisional assumption that the count is prior art under 35 U.S.C. 102(g) against this application may or may not be true, and the prosecution in this case will be suspended pending final determination of priority in the interference if and when no other issues remain.

Examiner Note:

1. This paragraph must follow all rejections under 35 U.S.C. 102 or 103 using the count of the interference as prior art.
2. This paragraph is applicable only to an application which is commonly owned by a party in the interference but is not involved in the interference.

¶ 23.18 Suspension of Prosecution Pending Outcome of Interference

The outcome of Interference No. [1] has a material bearing on the patentability of the claims in this application. Prosecution in this application is SUSPENDED pending a final judgment in the interference.

Applicant should call this case up for action upon termination of the interference.

Examiner Note:

This paragraph should only be used in an application that is not in the interference but is commonly owned by one of the parties thereto.

2333 Preliminary Motions - Related to Application Not Involved in Interference

Whenever a party in interference brings a motion under 37 CFR 1.633(d) or (e) concerning an application not already included in the interference, the administrative patent judge will normally send the primary examiner a written notice of such motion and the primary examiner should place this notice in said application file.

The notice is customarily sent to the Technology Center (TC) which declared the interference, since the application referred to in the motion is generally examined in the same TC. However, if the application is not being examined in the same TC, then the correct TC should be ascertained and the notice forwarded to that TC.

This notice serves useful and essential purposes, and due attention must be given to it by the examiner when it is received. First, the examiner is cautioned by this notice not to consider *ex parte*, questions which are pending before the Office in *inter partes*

Numeric Identifier	Definition	Comments and format	Mandatory (M) or Optional (O)
<306>	Pages	....	O.
<307>	Date.....	Journal date on which data published; specify as yyyy- mm-dd, MMM-yyyy or Season- yyyy.	O.
<308>	Database Accession Number.	Accession number assigned by database including database name.	O.
<309>	Database Entry Date.....	Date of entry in database; specify as yyyy-mm-dd or MMM-yyyy.	O.
<310>	Patent Document Number.	Document number; for patent-type citations only. Specify as, for example, US 07/ 999,999.	O.
<311>	Patent Filing Date.....	Document filing date, for patent-type citations only; specify as yyyy-mm-dd.	O.
<312>	Publication Date.....	Document publication date, for patent-type citations only; specify as yyyy-mm-dd.	O.
<313>	Relevant Residues.....	FROM (position) TO (position).....	O.
<400>	Sequence.....	SEQ ID NO should follow the numeric identifier and should appear on the line preceding the actual sequence.	M.

2424.03 Additional Miscellaneous Requirements

Throughout 37 CFR 1.823(b), the items of information relating to patent applications and patent publications should be provided keeping in mind the appropriate standards that have been established by the World Intellectual Property Organization (WIPO). In general, an application should be identified by a country code, a number and a filing date, while a published patent document should be identified by a country code, a number and kind code. Proper citation of priority patent applications is covered in MPEP § 201.14(d). For published patent documents, the country code, number and kind code will appear on the front page of the document. Unpublished PCT applications are identified by the letters PCT, the country code of the Receiving Office, the last two digits of the year of filing and a number, e.g., PCT/AT81/00033, PCT/FR88/00100. A published PCT application is identified by the letters WO, the last two digits of the year of publication, a number and a kind code, e.g., WO82/02827A, WO88/06811A. Country codes from WIPO Standard ST.3 Annex A and kind codes from WIPO Standard ST.16 are reproduced in MPEP § 1851. Questions on proper citation of patent documents should be directed to the Search and Information Resources Administration, International Liaison Staff.

that the opponent wishes to have reviewed by the Board at a final hearing. Where only the opponent's response includes a request for a final hearing, the party filing the paper shall, within 14 days from the date of service of the opponent's response, file a reply identifying any other decision of the administrative patent judge that the party wishes to have reviewed by the Board at a final hearing.

(3) The paper or the response should be accompanied by a motion (§ 1.635) requesting a testimony period if either party wishes to introduce any evidence to be considered at final hearing (§ 1.671). Any evidence that a party wishes to have considered with respect to the decisions and deferred motions identified for consideration or review at final hearing shall be filed or, if appropriate, noticed under § 1.671(e) during the testimony period of the party. A request for a testimony period shall be construed as including a request for final hearing.

(4) If the paper contains an explanation of why judgment should not be entered in accordance with the order, and if no party has requested a final hearing, the decision that is the basis for the order shall be reviewed based on the contents of the paper and the response. If the paper fails to show good cause, the Board shall enter judgment against the party against whom the order issued.

Where appropriate, an administrative patent judge may consult with an examiner on a question which arises in the first instance in the interference. For example, a party may allege unpatentability over a reference not previously considered, or may attempt to add a count drawn to subject matter which was not previously examined.

The extent of the consultation will be determined by the administrative patent judge; the examiner may be consulted merely on one point of patentability, or may be asked to conduct a search of newly-presented counts or claims. The consultation may be informal, as by a telephone call, or may be by a more formal written memorandum to the examiner.

It should be noted that nothing in 37 CFR 1.640 authorizes conferences between administrative patent judges and examiners in *ex parte* appeals under 35 U.S.C. 134 from an adverse decision of an examiner.

2341 Unpatentability Discovered

37 CFR 1.641. Unpatentability discovered by administrative patent judge.

(a) During the pendency of an interference, if the administrative patent judge becomes aware of a reason why a claim designated to correspond to a count may not be patentable, the administrative patent judge may enter an order notifying the parties of the reason and set a time within which each party may present its views, including any argument and any supporting evidence, and, in the case of the party whose claim may be unpatentable, any appropriate preliminary motions under §§ 1.633(c), (d) and (h).

(b) If a party timely files a preliminary motion in response to the order of the administrative patent judge, any opponent may file an opposition (§ 1.638(a)). If an opponent files an opposition, the party may reply (§ 1.638(b)).

(c) After considering any timely filed views, including any timely filed preliminary motions under § 1.633, oppositions and replies, the administrative patent judge shall decide how the interference shall proceed.

If the examiner, while the interference is pending, discovers a reference or other reason which he or she believes would render one or more of the parties' claims corresponding to the count(s) unpatentable, the reference or other reason should be brought to the attention of the administrative patent judge in charge of the interference. The administrative patent judge will determine what action, if any, should be taken in the interference.

2342 Addition to Interference

37 CFR 1.642. Addition of application or patent to interference.

During the pendency of an interference, if the administrative patent judge becomes aware of an application or a patent not involved in the interference which claims the same patentable invention as a count in the interference, the administrative patent judge may add the application or patent to the interference on such terms as may be fair to all parties.

37 CFR 1.642 permits an administrative patent judge to add a newly discovered patent, as well as newly discovered applications, to an interference.

EXAMINER DISCOVERS ANOTHER APPLICATION OR PATENT DURING INTERFERENCE

If, during the pendency of an interference, the examiner discovers another application or patent claiming subject matter which is the same as, or not patentably distinct from, the invention defined in a count of the interference, the examiner should bring the application or patent to the attention of the administrative patent judge in charge of the interference. The administrative patent judge will determine what action, if any, should be taken in the interference.

If the application in question is for reissue of a patent involved in the interference, see MPEP § 2360.

Numeric Identifier	Definition	Comments and format	Mandatory (M) or Optional (O)
<141>	Current Filing Date.....	Specify as: yyyy-mm-dd.....	M, if available.
<150>	Prior Application Number.	Specify as: US 07/999,999 or PCT/US96/99999.	M, if applicable include priority documents under 35 U.S.C. 119 and 120
<151>	Prior Application Filing Date.	Specify as: yyyy-mm-dd	M, if applicable
<160>	Number of SEQ ID NOs.	Count includes total number of SEQ ID NOs..... .	M.
<170>	Software.....	Name of software used to create the Sequence Listing.	O.
<210>	SEQ ID NO:#:.....	Response shall be an integer representing the SEQ ID NO shown.	M.
<211>	Length.....	Respond with an integer expressing the number of bases or amino acid residues.	M.
<212>	Type..... ...	Whether presented sequence molecule is DNA, RNA, or PRT (protein). If a nucleotide sequence contains both DNA and RNA fragments, the type shall be "DNA." In addition, the combined DNA/ RNA molecule shall be further described in the <220> to <223> feature section.	M.
<213>	Organism.....	Scientific name, i.e. Genus/ species, Unknown or Artificial Sequence. In addition, the "Unknown" or "Artificial Sequence" organisms shall be further described in the <220> to <223> feature section.	M.

not involved in the interference be rejected and that a patent be reexamined as to patent claims not involved in the interference.

When a patent is involved in an interference each claim of the patent will be designated to (A) correspond to a count or (B) not correspond to a count. All claims which are ultimately determined to correspond to a count will be involved in the judgment of the interference. Inasmuch as they are involved in the judgment of the interference, there is no need to recommend reexamination of those claims. The claims involved in the interference are either patentable or unpatentable based on the final decision of the Board.

2360 Reexamination, Reissue, Protest, or Litigation During Interference

37 CFR 1.660. Notice of reexamination, reissue, protest or litigation.

(a) When a request for reexamination of a patent involved in an interference is filed, the patent owner shall notify the Board within 10 days of receiving notice that the request was filed.

(b) When an application for reissue is filed by a patentee involved in an interference, the patentee shall notify the Board within 10 days of the day the application for reissue is filed.

(c) When a protest under § 1.291 is filed against an application involved in an interference, the applicant shall notify the Board within 10 days of receiving notice that the protest was filed.

(d) A party in an interference shall notify the Board promptly of any litigation related to any patent or application involved in an interference, including any civil action commenced under 35 U.S.C. 146.

(e) The notice required by this section is designed to assist the administrative patent judge and the Board in efficiently handling interference cases. Failure of a party to comply with the provisions of this section may result in sanctions under § 1.616. Knowledge by, or notice to, an employee of the Office other than an employee of the Board, of the existence of the reexamination, application for reissue, protest, or litigation shall not be sufficient. The notice contemplated by this section is notice addressed to the administrative patent judge in charge of the interference in which the application or patent is involved.

Under 37 CFR 1.660, a party is required to notify the Board when the party's patent or application becomes involved in other USPTO proceedings (reexamination, reissue, or protest) or litigation.

Before taking any action on the reexamination, reissue, or protest, the primary examiner should consult the administrative patent judge in charge of the interference. It is particularly important that a reissue application not be granted without the approval of the administrative patent judge. Also see MPEP § 2284 concerning requests for reexamination of a patent involved in an interference.

2361 Termination of Interference After Judgment

37 CFR 1.661. Termination of interference after judgment.

After a final decision is entered by the Board, an interference is considered terminated when no appeal (35 U.S.C. 141) or other review (35 U.S.C. 146) has been or can be taken or had.

37 CFR 1.661 sets forth when an interference is considered terminated after a judgment is entered in the interference. For the purpose of filing copies of settlement agreements under 35 U.S.C. 135(c), if an appeal or civil action is not filed, the interference is considered terminated as of the date the time for filing an appeal or civil action expired. 37 CFR 1.661; *Tallent v. Lamoine*, 204 USPQ 1058 (Comm'r Pat. 1979). See also *Nelson v. Bowler*, 212 USPQ 760 (Comm'r Pat. 1981). If an appeal is taken to the Court of Appeals for the Federal Circuit, the interference terminates on the date of receipt of the court's mandate by the U.S. Patent and Trademark Office. See MPEP § 1216.01. If a civil action is filed, and the decision of the district court is not appealed, the interference terminates on the date the time for filing an appeal from the court's decision expires. *Hunter v. Beissbarth*, 15 USPQ2d 1343 (Comm'r Pat. 1990).

2363 Action After Interference

37 CFR 1.664. Action after interference.

(a) After termination of an interference, the examiner will promptly take such action in any application previously involved in the interference as may be necessary. Unless entered by order of an administrative patent judge, amendments presented during the interference shall not be entered, but may be subsequently presented by the applicant subject to the provisions of this subpart provided prosecution of the application is not otherwise closed.

(b) After judgment, the application of any party may be held subject to further examination, including an interference with another application.

The files are returned to the Technology Center (TC) after termination of the interference. Jurisdiction of the examiner is automatically restored with the return of the files, and the cases of all parties are subject to such *ex parte* action as their respective conditions may require. The date when the interference terminates does not mark the beginning of a statutory

Numeric Identifier	Definition	Comments and format	Mandatory (M) or Optional (O)
<300>	Publication Information	Leave blank after <300>	O.
<301>	Authors..... ...	Preferably max. of ten named authors of publication; specify one name per line; preferable format: Surname, Other Names and/or Initials.	O.
<302>	Title.....	....	O.
<303>	Journal.....	....	O.
<304>	Volume	....	O.
<305>	Issue	....	O.
<306>	Pages	....	O.
<307>	Date.....	Journal date on which data published; specify as yyyy- mm-dd, MMM-yyyy or Season- yyyy.	O.
<308>	Database Accession Number.	Accession number assigned by database including database name.	O.
<309>	Database Entry Date.....	Date of entry in database; specify as yyyy-mm-dd or MMM-yyyy.	O.
<310>	Patent Document Number.	Document number; for patent-type citations only. Specify as, for example, US 07/ 999,999.	O.
<311>	Patent Filing Date.....	Document filing date, for patent-type citations only; specify as yyyy-mm-dd.	O.
<312>	Publication Date.....	Document publication date, for patent-type citations only; specify as yyyy-mm-dd.	O.
<313>	Relevant Residues.....	FROM (position) TO (position).....	O.

such claims "stand finally disposed of without further action by the examiner." See also 35 U.S.C. 135(a). When the files are returned to the TC after termination of the interference, a pencil line should be drawn through the claims as to which a judgment of priority adverse to an applicant has been rendered, and the notation "37 CFR 1.663" should be written in the margin to indicate the reason for the pencil line. If these claims have not been canceled by the applicant and the application is otherwise ready for issue, these notations should be replaced by a line in red ink and the notation "37 CFR 1.663" in red ink before passing the application to issue, and the applicant notified of the cancellation by an Examiner's Amendment. If an action is necessary in the application after the interference, the applicant should also be informed that "Claims (designated by numerals), as to which a judgment adverse to the applicant has been rendered, stand finally disposed of in accordance with 37 CFR 1.663."

If all the claims in the application are eliminated, a letter should be written informing the applicant that all the claims in the application have been disposed of, indicating the circumstances, that no claims remain subject to prosecution, and that the application will be sent to the abandoned files with the next group of abandoned applications. Proceedings are terminated as of the date the interference terminated. See MPEP § 2361.

If the losing party's application was under rejection at the time the interference was declared, such rejection is ordinarily repeated (either in full or by reference to the previous action) and, in addition, any other suitable rejections, as discussed below, are made. If the losing party's application was under final rejection or ready for issue, his or her right to reopen the prosecution is restricted to subject matter related to the issue of the interference.

Where the losing party failed to get a copy of the opponent's drawing or specification during the interference, the losing party may order a copy thereof to enable said party to respond to a rejection based on the successful party's disclosure. Such order is referred to the administrative patent judge who has authority to approve orders of this nature.

In addition to repeating any outstanding rejection, the examiner should consider whether any remaining claims in the losing party's application should be rejected on the ground of unpatentability under 35 U.S.C. 102/103, or on the ground of estoppel.

UNPATENTABILITY UNDER 35 U.S.C. 102/103

The examiner should determine from the Board's decision the basis on which judgment was rendered against the applicant. If the judgment was that applicant was not the first inventor of the subject matter in issue, the application claims may be rejected under 35 U.S.C. 102(g)/103 as unpatentable over the lost counts. If the judgment was based on a holding that applicant derived the invention from another, a rejection of claims as unpatentable over the lost counts under 35 U.S.C. 102(f)/103 may be in order. Where the Board rendered judgment against the applicant because his or her claims were unpatentable over prior art, under 35 U.S.C. 112, or on other grounds, the other claims in the application should be reviewed to determine whether any of those grounds may be applicable to them.

ESTOPPEL

Claims which cannot be rejected as unpatentable over the lost counts may still be subject to rejection on the ground of estoppel. As stated in 37 CFR 1.658(c), a losing party who could have properly moved under 37 CFR 1.633 or 1.634, but failed to do so, is estopped from taking subsequent action in the USPTO which is inconsistent with the party's failure to properly move. However, in the event of a "split award," the losing party is not estopped as to claims which corresponded, or properly could have corresponded, to a count which he or she won.

The following examples illustrate the application of estoppel to the losing party:

Example 1

Junior party applicant AL and senior party applicant AK both disclose separate patentable inventions "A" and "B" and claim only invention A in their respective applications. An interference is declared with a single count to invention A. Neither party files a motion under 37 CFR 1.633(c)(1) to add a count to invention B. Judgment as to all of AL's claims corresponding to the sole count is awarded to junior party applicant AL. Senior party applicant AK will be estopped to thereafter obtain a patent containing claims to invention B, because

be set forth at the beginning of the "Sequence Listing." The following table illustrates the numeric identifiers.

Numeric Identifier	Definition	Comments and format	Mandatory (M) or Optional (O)
<110>	Applicant.....	Preferably max. of 10 names; one name per line; preferable format: Surname, Other Names and/or Initials.	M.
<120>	Title of Invention.....	.....	M.
<130>	File Reference.....	Personal file reference.....	M when filed prior to assignment or appl. number
<140>	Current Application Number.	Specify as: US 07/999,999 or PCT/US96/99999.	M, if available.
<141>	Current Filing Date.....	Specify as: yyyy-mm-dd.....	M, if available.
<150>	Prior Application Number.	Specify as: US 07/999,999 or PCT/US96/99999.	M, if applicable include priority documents under 35 U.S.C. 119 and 120
<151>	Prior Application Filing Date.	Specify as: yyyy-mm-dd	M, if applicable
<160>	Number of SEQ ID NOs.	Count includes total number of SEQ ID NOs.....	M.
<170>	Software.....	Name of software used to create the Sequence Listing.	O.
<210>	SEQ ID NO:#:.....	Response shall be an integer representing the SEQ ID NO shown.	M.
<211>	Length.....	Respond with an integer expressing the number of bases or amino acid residues.	M.

AQ's claims corresponding to the sole count is awarded to applicant AQ. Applicant AS and the assignee would not be estopped, because applicant AQ was not a "losing party" (37 CFR 1.658(c)).

Example 8

Applicant AT discloses a generic invention to "solvent" and a species to "benzene." Application AT contains a patentable claim 1 (solvent) and no other claims. Applicant AU discloses the generic invention to "solvent" and species to "benzene" and "toluene." Application AU contains patentable claim 3 (solvent) and no other claims. An interference is declared with a single count (solvent). Claim 1 of application AT and claim 3 of application AU are designated to correspond to the count. No preliminary motions are filed. A judgment is entered in favor of applicant AT on the claim corresponding to the sole count. Applicant AU would be estopped to obtain a patent containing a claim to benzene, because applicant AU failed to file a preliminary motion under 37 CFR 1.633(c)(1) seeking to add a count to benzene and benzene was disclosed in winning party AT's application. Applicant AU would also be estopped to obtain a patent containing a claim to toluene, unless "toluene" defines a "separate patentable invention" from "solvent." A basis for interference estoppel (37 CFR 1.658(c)) exists if "toluene" and "solvent" define the "same patentable invention" because a claim to "toluene" could properly have been added and designated to correspond to the count. See 37 CFR 1.633(c)(2).

The following two examples illustrate the application of estoppel against an applicant who lost the interference based solely on the fact that the applicant was unable to establish a date of invention prior to the opponent's foreign filing date (see *Ex parte Tytgat*, 225 USPQ 907 (Bd. App. 1985)):

Example 9.

Application AV discloses engines in general and in particular a 6-cylinder engine. Application AV contains only claim 1 (engine). Application AW discloses engines in general, but does not specifically disclose a 6-cylinder engine. Application AW contains only a single claim 3 (engine). The U.S. "filing date" (37 CFR 1.601(h) of the AV application is prior to the U.S. filing date of the AW application, but the AW application claims a foreign priority date under 35 U.S.C. 119 based on an application filed in a foreign country prior to the filing date of the AV application. An interference is declared. The sole count of the interference is to "an engine." Claim 1 of the AV application and claim 3 of the AW application are designated to correspond to the count. During the interference, applicant AV does not move under 37 CFR 1.633(c)(2) to add a claim to a 6-cylinder engine and to designate the claim to correspond to the count. Applicant AW is awarded a judgment in the interference based on the earlier filing date of the foreign application. After the interference, applicant AV adds claim 2 (6-cylinder engine) to the AV application. Whether AV would be entitled to a patent containing a claim to a 6-cylinder engine will depend solely on whether a 6-cylinder engine is a "separate patentable invention" from "engine" - the subject matter of the count. If a 6-cylinder engine is a "separate patentable invention" within the meaning of 37 CFR 1.601(n), applicant AV could not have successfully moved under 37 CFR 1.633(c)(2) to add claim 2 and to designate it to correspond to the count. Therefore applicant AV could obtain a patent containing claim 2. If, on the other hand, a 6-cylinder engine is not a "separate patentable invention," claim 2 of the AV application would be rejected on the basis of interference estoppel because claim 2 could have been added by a motion under 37 CFR 1.633(c)(2). See 37 CFR 1.658(c).

Example 10.

This example is basically the same as Example 9, except that application AV initially contains claim 1 (engine) and claim 2 (6-cylinder engine). When the interference is declared, both claims 1 and 2 of application AV are designated to correspond to the count. During the interference, applicant AV does not move under 37 CFR 1.633(c)(4) to designate claim 2 as not corresponding to the count. A judgment in the interference is entered for applicant AW based on the earlier filing date of the foreign patent application. After the interference, applicant AV would not be able to obtain a patent containing claim 2, because the claim was designated to correspond to a count and entry of the judgment constitutes a final decision by the PTO

acid sequences that is set forth in this section remains applicable for amino acid sequences that are circular in configuration, with the exception that the designation of the first amino acid of the sequence may be made at the option of the applicant.

(5) An amino acid sequence that contains internal terminator symbols (*e.g.*, "Ter", "*", or ".", etc.) may not be represented as a single amino acid sequence, but shall be presented as separate amino acid sequences.

(e) A sequence with a gap or gaps shall be presented as a plurality of separate sequences, with separate sequence identifiers, with the number of separate sequences being equal in number to the number of continuous strings of sequence data. A sequence that is made up of one or more noncontiguous segments of a larger sequence or segments from different sequences shall be presented as a separate sequence.

Tables 1-6 of WIPO Standard ST.25 (1998), Appendix 2, are reproduced in MPEP § 2422.

2423.01 Format and Symbols To Be Used in Sequence Listings

37 CFR 1.822 sets forth the format and symbols to be used for listing nucleotide and/or amino acid sequence data. The codes for representing the nucleotide and/or amino acid characters in the sequences are set forth in the tables of WIPO Standard ST.25 (1998), Appendix 2, Tables 1 and 3. See MPEP § 2422. No other symbols shall be used in nucleotide and amino acid sequences. The "modified base" and "modified and unusual amino acid" codes appearing in WIPO Standard ST.25 (1998), Appendix 2, Tables 2 and 4 (see 37 CFR 1.822 and MPEP § 2422) are not to be set forth in the sequences recited in the Sequence Listing. However, "modified base" or "modified and unusual amino acid" codes may be used in the written description and/or drawing portions of the specification. To properly enter notations for modified codes in the Sequence Listing, the Feature section of the Sequence Listing should be used. That is, a modified base or amino acid may be presented in a given sequence as the corresponding unmodified base or amino acid if the modified base or amino acid is one of those listed in WIPO Standard ST.25 (1998), Appendix 2, Table 2 or 4 and the modification is also set forth in the Feature section of the Sequence Listing. Otherwise, all bases or amino acids not appearing in WIPO Standard ST.25 (1998), Appendix 2, Table 1 or 3 must be listed in a given sequence as "n" or "Xaa," respectively, with further information given in the Feature section of the "Sequence Listing." See 37 CFR 1.823(b).

In 37 CFR 1.822(b) and 37 CFR 1.822(d), the use of three-letter codes for amino acids is required. The use of the three-letter codes for amino acids is preferred over the one-letter codes from the perspective of facilitating the examiner's review of the application papers, including the "Sequence Listing", and the public's, as well as the examiner's, use of the printed patents. The three-letter codes must be presented using the upper case for the first character and lower case for the remaining two characters.

37 CFR 1.822(c) through (e) set forth the format for presenting sequence data. These paragraphs set forth the manner in which the characters in sequences are to be grouped, spaced, presented and numbered.

2423.02 Depiction of Coding Regions

If applicant chooses to depict coding regions, 37 CFR 1.822 (c)(3) requires the amino acids corresponding to the codons in the coding parts of a nucleotide sequence to be typed immediately below the corresponding codons. Further, in 37 CFR 1.822 (c)(3), the situation in which a codon spans an intron has been addressed. In those situations, the "amino acid symbol shall be typed below the portion of the codon containing two nucleotides." This requirement clarifies the representation of an amino acid that corresponds to a codon that spans an intron.

It should be noted that the sequence rules do not, in any way, require the depiction of coding regions or the amino acids corresponding to the codons in those coding regions. 37 CFR 1.822 (d) only requires that where amino acids corresponding to the codons in the coding parts of a nucleotide sequence are depicted, they must be depicted below the corresponding codons. There is absolutely no requirement in the rules to depict coding regions. Nor is there a requirement to separately list the amino acids corresponding to the codons in the coding parts of a nucleotide sequence unless the applicant desires to discuss the amino acids as a separate sequence. That is, when the coding parts of a nucleotide sequence and their corresponding amino acids have been identified, if applicant desires to discuss those amino acids in the coding parts of the nucleotide as a separate sequence, those amino acids must also be set forth as a separate sequence. The separate submission of the amino acid

interference before entering any amendments in any of the cases involved in the interference.

If the amendment is filed in reply to a letter by the primary examiner, suggesting a claim or claims for interference with another party and for the purpose of declaring an additional interference, the examiner, after obtaining the consent of the administrative patent judge, enters the amendment and takes the proper steps to propose the second interference.

If the amendment is one filed in an application where the administrative patent judge has consented to *ex parte* prosecution of an appeal to the Board of Patent Appeals and Interferences being conducted concurrently with the interference proceeding (see MPEP § 2315) and if it relates to the appeal, it should be treated like any similar amendment in an ordinary appealed application.

When an amendment filed during interference purports to put the application in condition for another interference either with a pending application or with a patent, the primary examiner must personally consider the amendment sufficiently to determine whether, in fact, it does so, and should then consult with the administrative patent judge. With the consent of the administrative patent judge, one of the following three actions may be appropriate.

(A) If the amendment presents allowable claims directed to an invention claimed in a patent or in another pending application in issue or ready for issue, the examiner borrows the file, enters the amendment, and takes the proper steps to propose the second interference.

(B) Where in the opinion of the examiner, the proposed amendment does not put the application in condition for interference with another application not involved in the interference, the amendment is placed in the file and marked "not entered" and the applicant is informed why it will not be now entered and acted upon.

(C) When the amendment seeks to provoke an interference with a patent not involved in the interference and the examiner believes that the claims presented are not patentable to the applicant, and where the application is open to further *ex parte* prosecution, the file should be obtained, the amendment entered, and the claims rejected, setting a time period for reply. If reconsideration is requested and rejection made final, a time period for appeal should be set. Where the application at the time of forming the interference was closed to further *ex parte* prosecution and the disclosure of the application will *prima facie* not support the claim presented, or where the claims presented are drawn to a nonelected invention, the amendment will not be entered and the applicant will be so informed. That communication will give briefly the reason for the nonentry of the amendment.

2365 Second Interference

37 CFR 1.665. Second interference.

A second interference between the same parties will not be declared upon an application not involved in an earlier interference for an invention defined by a count of the earlier interference. See § 1.658(c).

●●●●●●●●●●●●●●●●●●●●●●●●●●●●●●

§ 2428 for further information and Sample Statements.

2422.07 Requirements for Compliance, Statements Regarding New Matter, and Sanctions for Failure to Comply

37 CFR 1.821(g) requires compliance with the requirements of 37 CFR 1.821(b) through (f), as discussed above, if they are not satisfied at the time of filing under 35 U.S.C. 111(a) or at the time of entering the national stage of an international application under 35 U.S.C. 371, within the period of time set in a notice requiring compliance. Failure to comply will result in the abandonment of the application. Submissions in reply to requirements under this paragraph must be accompanied by a statement that the submission includes no new matter. Such a statement may be made by the applicant. Extensions of time in which to reply to a requirement under this paragraph are available pursuant to 37 CFR 1.136. When an action by the applicant is a *bona fide* attempt to comply with these rules and it is apparent that compliance with some requirement has inadvertently been omitted, the applicant may be given a new time period to correct the omission. See 37 CFR 1.135(c).

Provisional applications filed under 35 U.S.C. 111(b) need not comply with 37 CFR 1.821 through 1.825, however, applicants are encouraged to file a Sequence Listing as defined in 37 CFR 1.821(c) for ease of identification of the sequence information contained in the provisional application.

37 CFR 1.821(h) requires compliance with the requirements of 37 CFR 1.821(b) through (f), as discussed above, within the time period prescribed in a notice requiring compliance in an international application filed in the United States Receiving Office under the Patent Cooperation Treaty (PCT), if the above noted requirements are not satisfied at the time of filing. Submissions in reply to requirements under this paragraph must be accompanied by a statement that the submission does not include matter which goes beyond the disclosure in the international application as filed. Such a statement may be made by an applicant. International applications that fail to comply with any of the requirements of 37 CFR 1.821(b)-(f) will be searched to the extent possible without the benefit of the information in computer readable form. See PCT Administrative Instructions Section 513(c).

The requirement to submit a statement that a submission in reply to the requirements of this section does not include new matter or matter which goes beyond the disclosure in the application as filed is not the first instance in which the applicant has been required to ensure that there is not new matter upon amendment. The requirement is analogous to that found in 37 CFR 1.125 regarding substitute specifications. When a substitute specification is required because the number or nature of amendments would make it difficult to examine the application, the applicant must include a statement that the substitute specification includes no new matter. The necessity of requiring a substitute "Sequence Listing," or pages thereof, is similar to the necessity of requiring a substitute specification and, likewise, the burden is on the applicant to ensure that no new matter is added. Applicants have a duty to comply with the statutory prohibition (35 U.S.C. 132 and 35 U.S.C. 251) against the introduction of new matter.

It should be noted that the treatment accorded errors in sequencing or any other errors prior to the implementation date of the sequence rules will be no different for those applications filed on or after the implementation date of these rules. The correction of errors in sequencing or any other errors that are made in describing an invention are, as they have always been, subject to the statutory prohibition (35 U.S.C. 132 and 35 U.S.C. 251) against the introduction of new matter.

2422.08 Presumptions Regarding Compliance

Neither the presence nor absence of information which is not required under the sequence rules will create a presumption that such information is necessary to satisfy any of the requirements of 35 U.S.C. 112. Further, the grant of a patent on an application that is subject to 37 CFR 1.821 through 37 CFR 1.825 constitutes a presumption that the granted patent complies with the requirements of these rules.

Chapter 2400 Biotechnology

2401 Introduction
2402 The Deposit Rules
2403 Deposit of Biological Material
2403.01 Material Capable of Self-Replication
2403.02 Plant Material
2404 Need or Opportunity to Make a Deposit
2404.01 Biological Material That Is Known and Readily Available to the Public
2404.02 Biological Material That Can Be Made or Isolated Without Undue Experimentation
2404.03 Reference to a Deposit in the Specification
2405 Acceptable Depository
2406 Time of Making an Original Deposit
2406.01 Description in Application Specification
2406.02 Deposit After Filing Date - Corroboration
2406.03 Possible Loss of U.S. Filing Date in Other Countries
2407 Replacement or Supplement of Deposit
2407.01 In a Pending Application
2407.02 After a Patent Has Issued
2407.03 Failure to Replace
2407.04 Treatment of Replacement
2407.05 Exemption From Replacement
2407.06 Replacement May Not Be Recognized
2408 Term of Deposit
2409 Viability of Deposit
2410 Furnishing of Samples
2410.01 Conditions of Deposit
2410.02 Certification of Statement of Availability of Deposit
2411 Examination Procedures
2411.01 Rejections Based on Deposit Issue
2411.02 Replies to Rejections Based on Deposit Issue
2411.03 Application in Condition for Allowance Except for Deposit
2411.04 After a Patent Has Been Granted
2411.05 Content of Application with Respect to Deposited Material
2420 The Requirements for Patent Applications Containing Nucleotide Sequence and/or Amino Acid Sequence Disclosures - the Sequence Rules
2421 Overview of the Sequence Rules
2421.01 Applications Affected
2421.02 Summary of the Requirements of the Sequence Rules
2421.03 Notification of a Failure to Comply
2421.04 Future Changes to the Sequence Rules
2422 Nucleotide and/or Amino Acid Sequence Disclosures in Patent Applications
2422.01 Definitions of Nucleotide and/or Amino Acids for Purpose of Sequence Rules
2422.02 The Requirement for Exclusive Conformance; Sequences Presented in Drawing Figures
2422.03 The Requirements for a Sequence Listing and Sequence Identifiers; Sequences Embedded in Application Text; Variants of a Presented Sequence
2422.04 The Requirement for a Computer Readable Copy of the Official Copy of the Sequence Listing
2422.05 Reference to Previously Filed Identical Computer Readable Form; Continuing or Derivative Applications; Request for Transfer of Computer Readable Form
2422.06 Requirement for Statement Regarding Content of Official and Computer Readable Copies of Sequence Listing
2422.07 Requirements for Compliance, Statements Regarding New Matter, and Sanctions for Failure to Comply
2422.08 Presumptions Regarding Compliance
2422.09 Box Sequence; Hand Delivery of Sequence Listings and Computer Readable Forms
2423 Symbols and Format To Be Used for Nucleotide and/or Amino Acid Sequence Data
2423.01 Format and Symbols To Be Used in Sequence Listings
2423.02 Depiction of Coding Regions
2423.03 Presentation and Enumeration of Sequences
2424 Requirements for Nucleotide and/or Amino Acid Sequences as Part of the Application Papers
2424.01 Informational Requirements for the Sequence Listing
2424.02 Sequence Listing Numeric Identifiers
2424.03 Additional Miscellaneous Requirements
2425 Form and Format for Nucleotide and/or Amino Acid Sequence Submissions in Computer Readable Form
2426 Amendments to or Replacement of Sequence Listing and Computer Readable Copy Thereof
2427 Form Paragraphs and Notice to Comply
2427.01 Form Paragraphs
2427.02 Notice To Comply
2428 Sample Statements
2429 Helpful Hints for Compliance
2430 PatentIn Information; Utilities Programs;

applicant considers the sequence to be prior art. In general, any sequence that is disclosed and/or claimed as a sequence, i.e., as a string of particular bases or amino acids, and that otherwise meets the criteria of 37 CFR 1.821(a), must be set forth in the "Sequence Listing."

It is generally acceptable to present a single, general sequence in accordance with the sequence rules and to discuss and/or claim variants of that general sequence without presenting each variant as a separate sequence in the "Sequence Listing." By way of example only, the following types of sequence disclosures would be treated as noted herein by the Office. With respect to "conservatively modified variants thereof" of a sequence, the sequences may be described as SEQ ID NO:X and "conservatively modified variants thereof," if desired. With respect to a sequence that "may be deleted at the C-terminus by 1, 2, 3, 4, or 5 residues," all of the implied variations do not need to be included in the "Sequence Listing." If such a situation were encompassed by the rules, it would introduce far too much complexity into the "Sequence Listing" and the Office's database. The possible mathematical variations that could result from this type of language could reasonably require a "Sequence Listing" that would be thousands of pages in length. In this latter example, only the undeleted sequence needs to be included in the "Sequence Listing," and the sequences may be described as SEQ ID NO:X from which deletions have been made at the C-terminus by 1, 2, 3, 4, or 5 residues. The Office's database will only contain the undeleted sequence.

37 CFR 1.821(d) requires the use of the assigned sequence identifier in all instances where the description or claims of a patent application discuss sequences regardless of whether a given sequence is also embedded in the text of the description or claims of an application. This requirement is also intended to permit references, in both the description and claims, to sequences set forth in the "Sequence Listing" by the use of assigned sequence identifiers without repeating the sequence in the text of the description or claims. Sequence identifiers can also be used to discuss and/or claim parts or fragments of a properly presented sequence. For example, language such as "residues 14 to 243 of SEQ ID NO:23" is permissible and the fragment need not be separately presented in the "Sequence Listing." Where a sequence is embedded in the text of an application, it must be presented in a manner that complies with the requirements of the sequence rules.

The rules do not alter, in any way, the requirements of 35 U.S.C. 112. The implementation of the rules has had no effect on disclosure and/or claiming requirements. The rules, in general, or the use of sequence identifiers throughout the specification and claims, specifically, should not raise any issues under 35 U.S.C. 112, first or second paragraphs. The use of sequence identification numbers (SEQ ID NO:X) only provides a shorthand way for applicants to discuss and claim their inventions. These identification numbers do not in any way restrict the manner in which an invention can be claimed.

2422.04 The Requirement for a Computer Readable Copy of the Official Copy of the Sequence Listing

37 CFR 1.821(e) requires the submission of a copy of the "Sequence Listing" in computer readable form. The information on the computer readable form will be entered into the Office's database for searching and printing nucleotide and amino acid sequences. This electronic database will also enable the Office to exchange patented sequence data, in electronic form, with the Japanese Patent Office and the European Patent Office. It should be noted that the Office's database complies with the confidentiality requirement imposed by 35 U.S.C. 122. Pending application sequences are maintained in the database separately from published or patented sequences. That is, the Office will not exchange or make public any information on any sequence until the patent application containing that information is published or matures into a patent, or as otherwise allowed by 35 U.S.C. 122.

The "Sequence Listing" submitted pursuant to 37 CFR 1.821(c), whether on paper or compact disc, is the official copy of the "Sequence Listing." However, the Office may permit correction of the official copy, at the least, during the pendency of a given application by reference to the computer readable copy thereof submitted pursuant to 37 CFR 1.821(e) if both the official copy and computer readable form were submitted at the time of filing of the application and the totality of the circumstances otherwise

The rules are effective for all applications filed on or after January 1, 1990, and for all reexamination proceedings in which the request for reexamination was filed on or after January 1, 1990, except that deposits made prior to the effective date which were acceptable under the then current practice will be acceptable in such applications and proceedings. Since most of the provisions of the rules reflect policy and practice existing prior to January 1, 1990, little change in practice or burden on applicants for patent and patent owners relying on the deposit of biological material has occurred. Applicants and patent owners are encouraged to comply with these rules even if their applications and reexamination proceedings were filed prior to January 1, 1990.

2403 Deposit of Biological Material

37 CFR 1.801. Biological material.

For the purposes of these regulations pertaining to the deposit of biological material for purposes of patents for inventions under 35 U.S.C. 101, the term biological material shall include material that is capable of self-replication either directly or indirectly. Representative examples include bacteria, fungi including yeast, algae, protozoa, eukaryotic cells, cell lines, hybridomas, plasmids, viruses, plant tissue cells, lichens and seeds. Viruses, vectors, cell organelles and other non-living material existing in and reproducible from a living cell may be deposited by deposit of the host cell capable of reproducing the non-living material.

37 CFR 1.801 indicates that the rules pertaining to deposits for purposes of patents for inventions under 35 U.S.C. 101 are intended to relate to biological material. For the purposes of these rules, the term "biological material" is defined in terms of a non-exhaustive list of representative materials which can be deposited in accordance with the procedures defined in these rules. These rules are intended to address procedural matters in the deposit of biological material for patent purposes. They are not designed to decide substantive issues such as whether a deposit of a particular organism or material would be recognized or necessary for the purposes of satisfying the statutory requirements for patentability under 35 U.S.C. 112. Although the issue of the need to make a deposit of biological material typically arises under the enablement requirement of the first paragraph of 35 U.S.C. 112, the issue could also arise under the description requirement (35 U.S.C. 112, first paragraph), best mode requirement (35 U.S.C. 112, first paragraph) or the requirements of the second paragraph of 35 U.S.C. 112 with respect to the claims.

37 CFR 1.801 does not attempt to identify what biological material either needs to be or may be deposited to comply with the requirements of 35 U.S.C. 112. For the most part, this issue must be addressed on a case-by-case basis. Thus, while the Office does not currently contemplate that there would be any situations where a material that is not capable of self-replication either directly or indirectly would be acceptable as a deposit, an applicant is clearly not precluded by these rules from attempting to show in any given application why the deposit of such a material should be acceptable to satisfy the requirements of 35 U.S.C. 112.

2403.01 Material Capable of Self-Replication

Biological material includes material that is capable of self-replication either directly or indirectly. Direct self-replication includes those situations where the biological material reproduces by itself. Representative examples of materials capable of self-replication are defined in the rule. Indirect self-replication is meant to include those situations where the biological material is only capable of replication when another self-replicating biological material is present. Self-replication after insertion in a host is one example of indirect self-replication. Examples of indirect replicating biological materials include viruses, phages, plasmids, symbionts, and replication defective cells. The list of representative examples of each type of replicating material includes viruses to demonstrate that the two lists in the rule are not intended to be mutually exclusive.

2403.02 Plant Material

Although plant material is included within the scope of the definition of biological material for purposes of patents for plant inventions under 35 U.S.C. 101, the rules on deposits are not applicable to applications filed under the Plant Patent Act (35 U.S.C. 161-164). The Office is of the view that a deposit is not required under the present provisions of 35 U.S.C. 162. Thus, a deposit is not necessary for the grant of a plant patent under the provisions of 35 U.S.C. 161-164. As with other biological material deposited for

The limit of four or more amino acids was established for consistency with limits in place for industry database collections whereas the limit of ten or more nucleotides, while lower than certain industry database limits, was established to encompass those nucleotide sequences to which the smallest probe will bind in a stable manner. The limits for amino acids and nucleotides are also consistent with those established for sequence data exchange with the Japanese Patent Office and the European Patent Office.

37 CFR 1.821(a)(1) and 37 CFR 1.821(a)(2) present further definitions for those nucleotide and amino acid sequences that are intended to be embraced by the sequence rules. Situations in which the applicability of the rules are in issue will be resolved on a case-by-case basis.

Nucleotide sequences are further limited to those that can be represented by the symbols set forth in 37 CFR 1.822(b), which incorporates by reference WIPO Standard ST.25 (1998), Appendix 2, Table 1 (see MPEP § 2422). The presence of other than typical 5' to 3' phosphodiester linkages in a nucleotide sequence does not render the rules inapplicable. The Office does not want to exclude linkages of the type commonly found in naturally occurring nucleotides, e.g., eukaryotic end capped sequences.

Amino acid sequences are further limited to those listed in 37 CFR 1.822(b), which incorporates by reference WIPO Standard ST.25 (1998), Appendix 2, Table 3 (see MPEP § 2422), and those L-amino acids that are commonly found in naturally occurring proteins. The limitation to L-amino acids is based upon the fact that there currently exists no widely accepted standard nomenclature for representing the scope of amino acids encompassed by non-L-amino acids, and, as such, the process of meaningfully encoding these other amino acids for computerized searching and printing is not currently feasible. The presence of one or more D-amino acids in a sequence will exclude that sequence from the scope of the rules. (Voluntary compliance is, however, encouraged in these situations; the symbol "Xaa" can be used to represent D-amino acids.) The sequence rules embrace "[a]ny peptide or protein that can be expressed as a sequence using the symbols in WIPO Standard ST.25 (1998), Appendix 2, Table 3 in conjunction with a description in the Feature section to describe, for example, modified linkages, cross links and end caps, non-peptidyl bonds, etc." 37 CFR 1.821(a)(2).

With regard to amino acid sequences, the use of the terms "peptide or protein" implies, however, that the amino acids in a given sequence are linked by at least three consecutive peptide bonds. Accordingly, an amino acid sequence is not excluded from the scope of the rules merely due to the presence of a single non-peptidyl bond. If an amino acid sequence can be represented by a string of amino acid abbreviations, with reference, where necessary, to a features table to explain modifications in the sequence, the sequence comes within the scope of the rules. However, the rules are not intended to encompass the subject matter that is generally referred to as synthetic resins.

2422.02 The Requirement for Exclusive Conformance; Sequences Presented in Drawing Figures

37 CFR 1.821(b) requires exclusive conformance, with regard to the manner in which the nucleotide and/or amino acid sequences are presented and described, with the sequence rules for all applications that include nucleotide and amino acid sequences that fall within the definitions. This requirement is necessary to minimize any confusion that could result if more than one format for representing sequence data was employed in a given application. It is also expected that the required standard format will be more readily and widely accepted and adopted if its use is exclusive, as well as mandatory.

In view of the fact that many significant sequence characteristics may only be demonstrated by a figure, the exclusive conformance requirement of this section may be relaxed for drawing figures. This is especially true in view of the fact that the representation of double stranded nucleotides is not permitted in the "Sequence Listing" and many significant nucleotide features, such as "sticky ends" and the like, will only be shown effectively by reference to a drawing figure. Further, the similarity or homology between/among sequences can only be depicted in an effective manner in a drawing figure. Similarly, drawing figures are recommended for use with amino acid sequences to depict structural features of the corresponding protein, such as finger regions and Kringle regions. The situations discussed herein are given by way of example only and there may be many other reasons for

available in the sense that those having possession of it would make it available upon request, but no one has been informed of its existence.

The Board of Patent Appeals and Interferences has held that a description of the precise geographic location of marine tunicates, as a biological material, used in a claimed invention was adequate to satisfy the enablement requirement of 35 U.S.C. 112. *Ex Parte Rinehart*, 10 USPQ2d 1719 (Bd. Pat. App. & Int. 1985). The term "readily" used in the phrase "known and readily available" is considered appropriate to define that degree of availability which would be reasonable under the circumstances. If the biological material and its natural location can be adequately described so that one skilled in the art could obtain it using ordinary skill in the art, the disclosure would appear to be sufficient to meet the enablement requirement of 35 U.S.C. 112 without a deposit so long as its degree of availability is reasonable under the circumstances.

By showing that a biological material is known and readily available or by making a deposit in accordance with these rules, applicant does not guarantee that such biological material will be available forever. Public access during the term of the patent may affect the enforceability of the patent. Although there is a public interest in the availability of a deposited biological material during and after the period of enforceability of the patent, there should not be any undue concern about continued access to the public. See 37 CFR 1.806 (the term of deposit is "at least thirty (30) years and at least five (5) years after the most recent request" for a sample; the agreement sufficiently ensures that the deposit will be "available beyond the enforceable life of the patent"). Unless there is a reasonable basis to believe that the biological material will cease to be available during the enforceable life of the patent, current availability would satisfy the requirement. The incentives provided by the patent system should not be constrained by the mere possibility that a disclosure that was once enabling would become non-enabling over a period of time through no fault of the patentee. *In re Metcalfe*, 410 F.2d 1378, 161 USPQ 789 (CCPA 1969).

If an applicant has adequately established that a biological material is known and readily available, the Office will accept that showing. In those instances, however, the applicant takes the risk that the material may cease to be known and readily available. Such a defect cannot be cured by reissue after the grant of a patent.

On the other hand, *Ex parte Humphreys*, 24 USPQ2d 1255 (Bd. Pat. App. & Int. 1992), held that the only manner in which applicants could satisfy their burden of assuring public access to the needed biological material, and, thereby, compliance with the enablement requirement of 35 U.S.C. 112, was by making an appropriate deposit. The fact that applicants and other members of the public were able to obtain the material in question from a given depository prior to and after the filing date of the application in issue did not establish that upon issuance of a patent on the application that such material would continue to be accessible to the public. The applicants did not make of record any of the facts and circumstances surrounding their access to the material in issue from the depository, nor was there any evidence as to the depository's policy regarding the material if a patent would have been granted. Further, there was no assurance that the depository would have allowed unlimited access to the material if the application had matured into a patent.

There are many factors that may be used as indicia that a biological material is known and readily available to the public. Relevant factors include commercial availability, references to the biological material in printed publications, declarations of accessibility by those working in the field, evidence of predictable isolation techniques, or an existing deposit made in accordance with these rules. Each factor alone may or may not be sufficient to demonstrate that the biological material is known and readily available. Those applicants that rely on evidence of accessibility other than a deposit take the risk that the patent may no longer be enforceable if the biological material necessary to satisfy the requirements of 35 U.S.C. 112 ceases to be accessible.

The Office will accept commercial availability as evidence that a biological material is known and readily available only when the evidence is clear and convincing that the public has access to the material. See the final rule entitled "Deposit of Biological Materials for Patent Purposes," 54 FR 34864, 34875 (August 22, 1989). A product could be commercially available but only at a price that effectively eliminates accessibility to those desiring to obtain a sample. The

BINDING	binding site for any chemical group (co-enzyme, prosthetic group, etc.); the chemical nature of the group is given in the description field
SIGNAL	extent of a signal sequence (prepeptide)
TRANSIT	extent of a transit peptide (mitochondrial, chloroplastic, or for a microbody)
PROPEP	extent of a propeptide
CHAIN	extent of a polypeptide chain in the mature protein
PEPTIDE	extent of a released active peptide
DOMAIN	extent of a domain of interest on the sequence; the nature of that domain is given in the description field
CA_BIND	extent of a calcium-binding region
DNA_BIND	extent of a DNA-binding region
NP_BIND	extent of a nucleotide phosphate binding region; the nature of the nucleotide phosphate is indicated in the description field
TRANSMEM	extent of a transmembrane region
ZN_FING	extent of a zinc finger region
SIMILAR	extent of a similarity with another protein sequence; precise information, relative to that sequence is given in the description field
REPEAT	extent of an internal sequence repetition
HELIX	secondary structure: Helices, for example, Alpha-helix, 3(10) helix, or Pi-helix
STRAND	secondary structure: Beta-strand, for example, Hydrogen bonded beta-strand, or Residue in an isolated beta-bridge
TURN	secondary structure: Turns, for example, H-bonded turn (3-turn, 4-turn, or 5-turn)
ACT_SITE	amino acid(s) involved in the activity of an enzyme
SITE	any other interesting site on the sequence
INIT_MET	the sequence is known to start with an initiator methionine

112, or that a deposit in accordance with these regulations is or was required. It should be noted, however, that a reference to a biological material, present in an application upon filing, may form the basis for making a deposit, where required, after the filing date of a given application but that the reference to the biological material, itself, cannot be added after filing without risking the prohibited introduction of new matter (35 U.S.C. 132). See the discussion of the Lundak application in MPEP § 2406.01.

2405 Acceptable Depository

37 CFR 1.803. Acceptable depository.

(a) A deposit shall be recognized for the purposes of these regulations if made in

(1) any International Depositary Authority (IDA) as established under the Budapest Treaty on the International Recognition of the Deposit of Microorganisms for the Purposes of Patent Procedure, or

(2) any other depository recognized to be suitable by the Office. Suitability will be determined by the Commissioner on the basis of the administrative and technical competence, and agreement of the depository to comply with the terms and conditions applicable to deposits for patent purposes. The Commissioner may seek the advice of impartial consultants on the suitability of a depository. The depository must:

(i) Have a continuous existence;

(ii) Exist independent of the control of the depositor;

(iii) Possess the staff and facilities sufficient to examine the viability of a deposit and store the deposit in a manner which ensures that it is kept viable and uncontaminated;

(iv) Provide for sufficient safety measures to minimize the risk of losing biological material deposited with it;

(v) Be impartial and objective;

(vi) Furnish samples of the deposited material in an expeditious and proper manner; and

(vii)Promptly notify depositors of its inability to furnish samples, and the reasons why.

(b) A depository seeking status under paragraph (a)(2) of this section must direct a communication to the Commissioner which shall:

(1) Indicate the name and address of the depository to which the communication relates;

(2) Contain detailed information as to the capacity of the depository to comply with the requirements of paragraph (a)(2) of this section, including information on its legal status, scientific standing, staff and facilities;

(3) Indicate that the depository intends to be available, for the purposes of deposit, to any depositor under these same conditions;

(4) Where the depository intends to accept for deposit only certain kinds of biological material, specify such kinds;

(5) Indicate the amount of any fees that the depository will, upon acquiring the status of suitable depository under paragraph (a)(2) of this section, charge for storage, viability statements and furnishings of samples of the deposit.

(c) A depository having status under paragraph (a)(2) of this section limited to certain kinds of biological material may extend such status to additional kinds of biological material by directing a communication to the Commissioner in accordance with paragraph (b) of this section. If a previous communication under paragraph (b) of this section is of record, items in common with the previous communication may be incorporated by reference.

(d) Once a depository is recognized to be suitable by the Commissioner or has defaulted or discontinued its performance under this section, notice thereof will be published in the Official Gazette of the Patent and Trademark Office.

37 CFR 1.803 indicates that a depository will be recognized as acceptable for the purposes of these regulations if it is either an International Depositary Authority (IDA) established under the Budapest Treaty, or if it is a depository recognized as suitable by the Commissioner. After the effective date of these regulations, a deposit of biological material which is made in a depository which is not recognized as acceptable under this regulation will not be considered as satisfying the requirements of 35 U.S.C. 112. See *Ex parte Humphreys*, 24 USPQ2d 1255 (Bd. Pat. App. & Int. 1992). On the other hand, if a deposit is not required to satisfy the requirements of 35 U.S.C. 112, it is permissible to make reference to such a deposit even though it may not be in a depository or made under the conditions which are acceptable under these regulations. As new depositories are recognized as suitable by the Commissioner, their identity will be announced in the *Official Gazette*.

An organization may be recognized as suitable by the Office if the procedure and conditions specified in 37 CFR 1.803(a)(2) and 37 CFR 1.803(b) are followed. Generally, it is not the intention of the Office to recognize as suitable any organization where the need for a suitable depository for patent purposes is being met by depositories recognized as IDAs under the Budapest Treaty. Suitability will be judged by the Commissioner, based on need and the information supplied by the organization seeking status, and information obtained from other sources that may be consulted.

While there is a desire to provide flexibility to a patent applicant in selecting an appropriate depository, these rules are not intended to permit each patent applicant to become its own depository since both the patent owner and the public have an interest in the continued availability and accessibility of the deposit

Key	Description
V_segment	variable segment of immunoglobulin light and heavy chains, and T-cell receptor alpha, beta, and gamma chains; codes for most of the variable region (V_region) and the last few amino acids of the leader peptide
variation	a related strain contains stable mutations from the same gene (for example, RFLPs, polymorphisms, etc.) which differ from the presented sequence at this location (and possibly others)
3'clip	3'-most region of a precursor transcript that is clipped off during processing
3'UTR	region at the 3' end of a mature transcript (following the stop codon) that is not translated into a protein
5'clip	5'-most region of a precursor transcript that is clipped off during processing
5'UTR	region at the 5' end of a mature transcript (preceding the initiation codon) that is not translated into a protein
-10_signal	pribnow box; a conserved region about 10 bp upstream of the start point of bacterial transcription units which may be involved in binding RNA polymerase; consensus=TAtAaT
-35_signal	a conserved hexamer about 35 bp upstream of the start point of bacterial transcription units; consensus=TTGACa [ ] or TGTTGACA [ ]

WIPO Standard ST.25 (1998), Appendix 2, Table 6
provides for feature keys related to protein sequences

Table 6: List of Feature Keys Related to Protein Sequences

Key	Description
CONFLICT	different papers report differing sequences
VARIANT	authors report that sequence variants exist
VARSPLIC	description of sequence variants produced by alternative splicing
MUTAGEN	site which has been experimentally altered
MOD_RES	post-translational modification of a residue
ACETYLATION	N-terminal or other
AMIDATION	generally at the C-terminal of a mature active peptide
BLOCKED	undetermined N- or C-terminal blocking group
FORMYLATION	of the N-terminal methionine

Oosterstraat 1
Postbus 273
NL-3740 AG Baarn
Netherlands

China Center for Type Culture Collection (CCTCC)
Wuhan University
Wuhan 430072
China

China General Microbiological Culture
Center (CGMCC)
China Committee for Culture Collection of
Microorganisms
P.O. Box 2714
Beijing 100080
China

Colección Española de Cultivos Tipo (CECT)
Universidad de Valencia
Edificio de Investigación
Campus de Burjasot
46100 Burjasot (Valencia)
Spain

Collection Nationale De Cultures
De Micro-organismes (CNCM)
Institut Pasteur
28, rue du Dr Roux
75724 Paris Cédex 15
France

Collection of Industrial Yeasts DBVPG
Applied Microbiology Section
Department of Plant Biology
Faculty of Agriculture
University of Perugia
Borgo 20 Giugno, 74
06122 Perugia
Italy

Culture Collection of Algae and Protozoa (CCAP)
Institute of Freshwater Ecology
Windermere Laboratory
Ambleside, Cumbria LA22 0LP
United Kingdom and Dunstaffnage Marine Laboratory
P.O. Box 3
Oban, Argyll PA34 4AD
United Kingdom

Culture Collection of Yeasts (CCY)
Institute of Chemistry
Slovak Academy of Sciences
Dúbravská cesta 9
842 38 Bratislava,
Slovakia

Czech Collection of Microorganisms (CCM)
Masaryc University
ul. Tvrdého 14
602 00 Brno
Czech Republic

DSMZ-Deutsche Sammlung von Mikroorganismen
und Zellkulturen GmbH (DSMZ)
Mascheroder Weg 1b
D-38124 Braunschweig
Germany

European Collection of Cell Cultures (ECACC)
Vaccine Research and Production Laboratory
Public Health Laboratory Service
Centre for Applied Microbiology and Research
Porton Down
Salisbury, Wiltshire SP4 0JG
United Kingdom

Institute of Agriculture and Food Biotechnology (IAFB)
Collection of Industrial Microorganisms
Ul. Rakowiecka 36
02-532 Warsaw, Poland

International Mycological Institute (IMI)
Bakeham Lane
Englefield Green
Egham, Surrey TW20 9TY
United Kingdom

International Patent Organism Depositary (IPOD)
AIST Tsukuba Central 6
1-1, Higashi 1-chome
Tsukuba-shi, Ibaraki-Ken 305-8566
Japan

Korean Cell Line Research Foundation (KCLRF)
Cancer Research Institute
Seoul National University College of Medicine
28 Yungon-dong, Chongno-gu
Seoul 110-799
Republic of Korea

Key	Description
misc_structure	any secondary or tertiary structure or conformation that cannot be described by other Structure keys (stem_loop and D-loop)
modified_base	the indicated nucleotide is a modified nucleotide and should be substituted for by the indicated molecule (given in the mod_base qualifier value)
mRNA	messenger RNA; includes 5' untranslated region (5'UTR), coding sequences (CDS, exon) and 3' untranslated region (3'UTR)
mutation	a related strain has an abrupt, inheritable change in the sequence at this location
N_region	extra nucleotides inserted between rearranged immunoglobulin segments
old_sequence	the presented sequence revises a previous version of the sequence at this location
polyA_signal	recognition region necessary for endonuclease cleavage of an RNA transcript that is followed by polyadenylation; consensus=AATAAA
polyA_site	site on an RNA transcript to which will be added adenine residues by post-transcriptional polyadenylation
precursor_RNA	any RNA species that is not yet the mature RNA product; may include 5' clipped region (5'clip), 5' untranslated region (5'UTR), coding sequences (CDS, exon), intervening sequences (intron), 3' untranslated region (3'UTR), and 3' clipped region (3'clip)
prim_transcript	primary (initial, unprocessed) transcript; includes 5' clipped region (5'clip), 5' untranslated region (5'UTR), coding sequences (CDS, exon), intervening sequences (intron), 3' untranslated region (3'UTR), and 3' clipped region (3'clip)
primer_bind	non-covalent primer binding site for initiation of replication, transcription, or reverse transcription; includes site(s) for synthetic, for example, PCR primer elements
promoter	region on a DNA molecule involved in RNA polymerase binding to initiate transcription
protein_bind	non-covalent protein binding site on nucleic acid
RBS	ribosome binding site
repeat_region	region of genome containing repeating units
repeat_unit	single repeat element
rep_origin	origin of replication; starting site for duplication of nucleic acid to give two identical copies
rRNA	mature ribosomal RNA; the RNA component of the ribonucleoprotein particle (ribosome) which assembles amino acids into proteins

subject to the conditions of 37 CFR 1.809. Where a deposit is needed to satisfy the requirements of 35 U.S.C. 112 and it is made during the pendency of the application, it must be made no later than the time period set by the examiner at the time the Notice of Allowance and Issue Fee Due is mailed. A necessary deposit need not be made by an applicant until the application is in condition for allowance so long as the applicant provides a written assurance that an acceptable deposit will be made on or before the payment of the issue fee. This written assurance must provide sufficiently detailed information to convince the examiner that there is no outstanding issue regarding deposits that needs to be resolved.

These rules are equally applicable in the cases of international and national stage applications filed under the Patent Cooperation Treaty. Insofar as the rules do not permit post-issuance original deposits, the failure to make an original deposit in an application cannot be cured by filing a reissue application or instituting a reexamination proceeding. However, if an amendment of claims in a reexamination proceeding raises the need for a deposit, an original deposit may be made during the reexamination proceeding.

2406.01 Description in Application Specification

37 CFR 1.804(a) specifies not only a permissible time frame for making an original deposit, but also specifies that the biological material deposited must be specifically identified in the application for patent as filed. The requirement for a specific identification is consistent with the description requirement of the first paragraph of 35 U.S.C. 112 and provides an antecedent basis for the biological material which either has been or will be deposited before the patent is granted.

The description in the Lundak application as filed (now patent 4,594,325) provides a suitable illustration of the specific identification and description which are required in an application as filed. In that application, an immortal B-cell line was disclosed and claimed. The cell line was referred to in the application, as filed, as WI-L2-729 HF2. The methods of obtaining and using this cell line were also described in the application as filed. A deposit of the cell line was made with the American Type Culture Collection (ATCC) about a week after the application was filed in the United States. The United States Court of Appeals for the Federal Circuit held that the requirements of access by the Office to a sample of the cell line during pendency, and public access after grant, were met by Lundak's procedures. The Court further held that the addition of information designating the depository, accession number, and deposit date of the deposited cell line in ATCC after the filing date did not violate the prohibition against new matter in 35 U.S.C. 132. *In re Lundak*, 773 F.2d 1216, 227 USPQ 90 (Fed. Cir. 1985). However, it must be clear from the application as filed that the invention claimed and described in the specification "was fully capable of being reduced to practice (i.e., no technological problems, the resolution of which would require more than ordinary skill and reasonable time, remained in order to obtain an operative, useful process)." *Feldman v. Aunstrup*, 517 F.2d 1351, 1355, 186 USPQ 108, 113 (CCPA 1975), *cert. denied*, 424 U.S. 912 (1976).

2406.02 Deposit After Filing Date - Corroboration

When the original deposit is made after the effective filing date of an application for patent, an applicant is required to promptly submit a statement from a person in a position to corroborate that the biological material which is deposited is a biological material specifically identified in the application (the filing date of which is relied upon) as filed. The nature of this corroboration will depend on the circumstances in the particular application under consideration, including the length of time between the application filing date and the date of deposit. While few, if any, situations can be imagined where the description requirement of 35 U.S.C. 112 can be satisfied where the biological material was not in existence at the time of filing, the rules will not preclude such a situation as there is no requirement in the patent law that an actual reduction to practice occur as a condition precedent to filing a patent application.

Ide	Isodesmosine
aIle	allo-Isoleucine
MeGly	N-Methylglycine, sarcosine
MeIle	N-Methylisoleucine
MeLys	6-N-Methyllysine
MeVal	N-Methylvaline

Nva	Norvaline
Nle	Norleucine
Orn	Ornithine

WIPO Standard ST.25 (1998), Appendix 2, Table 5, provides for feature keys related to DNA sequences.

Table 5: List of Feature Keys Related to Nucleotide Sequences

Key	Description
allele	a related individual or strain contains stable, alternative forms of the same gene which differs from the presented sequence at this location (and perhaps others)
attenuator	(1) region of DNA at which regulation of termination of transcription occurs, which controls the expression of some bacterial operons; (2) sequence segment located between the promoter and the first structural gene that causes partial termination of transcription
C_region	constant region of immunoglobulin light and heavy chains, and T-cell receptor alpha, beta, and gamma chains; includes one or more exons depending on the particular chain
CAAT_signal	CAAT box; part of a conserved sequence located about 75 bp up-stream of the start point of eukaryotic transcription units which may be involved in RNA polymerase binding; consensus=GG (C or T) CAATCT
CDS	coding sequence; sequence of nucleotides that corresponds with the sequence of amino acids in a protein (location includes stop codon); feature includes amino acid conceptual translation
conflict	independent determinations of the "same" sequence differ at this site or region
D-loop	displacement loop; a region within mitochondrial DNA in which a short stretch of RNA is paired with one strand of DNA, displacing the original partner DNA strand in this region; also used to describe the displacement of a region of one strand of duplex DNA by a single stranded invader in the reaction catalyzed by RecA protein
D-segment	diversity segment of immunoglobulin heavy chain, and T-cell receptor beta chain
enhancer	a cis-acting sequence that increases the utilization of (some) eukaryotic promoters, and can function in either orientation and in any location (upstream or downstream) relative to the promoter

deposit during the pendency of an application than after the patent is granted. Replacement will typically take place where the earlier deposit is no longer viable. The term "supplement" is directed to those situations where the earlier deposit is still viable in the sense that it is alive and capable of replication either directly or indirectly, but has lost a quality (e.g., purity, functionality) it allegedly possessed at the time the application was filed.

2407.01 In a Pending Application

37 CFR 1.805(a) relates to the procedure for replacing or supplementing a deposit with respect to a pending application or a patent. An applicant or patent owner is required to notify the Office when it obtains information that the depository possessing a deposit cannot furnish samples of the deposit to satisfy the requirements of 35 U.S.C. 112. When the Office is so informed or otherwise becomes aware that samples of the deposited material cannot be furnished by the depository, the examiner will treat the application or reexamination proceeding, whichever is applicable, as if no deposit existed. A replacement or supplemental deposit will be accepted if it meets all the requirements for making an original deposit.

It should be noted that in a pending application, an applicant need not replace the identical material previously deposited, but may make an original deposit of a biological material which is specifically identified and described in the application as filed. Whether this alternative deposit will meet the requirements of 35 U.S.C. 112 with respect to the claimed subject matter must be resolved by the examiner on a case-by-case basis. The conditions in 37 CFR 1.802(b) and 37 CFR 1.804(b) must be satisfied.

2407.02 After a Patent Has Issued

A replacement deposit made in connection with an application for reissue patent or a reexamination proceeding or both shall not be accepted unless a certificate of correction is requested which meets the terms of 37 CFR 1.805(b) and 37 CFR 1.805 (c) for replacement deposits. Any correction made to the original patent will be automatically incorporated into the reissued or reexamined patent unless changes are made during examination of the reissue application or reexamination proceeding.

37 CFR 1.805(b) and 37 CFR 1.805(c) specify the procedures that a patent owner may follow to ensure that a patent contains the appropriate information about a deposited biological material in the event that a replacement or supplemental deposit is made after the patent is granted. 37 CFR 1.805(b) describes the information which must be contained in the certificate of correction, whereas 37 CFR 1.805(c) describes the information which must be provided in the request to make the correction.

2407.03 Failure to Replace

37 CFR 1.805(d) sets forth the Office position that the failure to make a replacement deposit in a case pending before the Office, for example a reissue or reexamination proceeding, where a deposit is considered to be necessary to satisfy the requirements of 35 U.S.C. 112, shall cause the application or patent involved to be treated in any Office proceeding as if no deposit were made. The provisions of 37 CFR 1.805(g) indicate that a replacement need not be made where, at the point in time when replacement would otherwise be necessary, access to the necessary biological material was otherwise available. For example, a replacement deposit would not be required under the circumstances where access to the necessary biological material was established through commercial suppliers.

2407.04 Treatment of Replacement

37 CFR 1.805(e) indicates that the Office will apply a rebuttable presumption of identity between the replacement deposit and an original deposit where a patent making reference to the deposit is relied on during any Office proceeding. This means that where a replacement deposit is permitted and made, the examiner will assume that the same material as described in the patent is accessible from the identified depository unless evidence to the contrary comes to the attention of the Office.

An applicant for patent may make a replacement deposit during the pendency of the application for any reason. The provisions of 37 CFR 1.805(f) recognize that since an original deposit may be made during the pendency of the application subject to the conditions of 37 CFR 1.809, a replacement deposit logically cannot be held to any higher standard or any further requirements.

the corresponding unmodified bases in the sequence itself, if the modified base is one of those listed below and the modification is further described in the Feature section of the Sequence Listing. The codes from the list below may be used in the description (i.e., the specification and drawing, or in the Sequence Listing) but these codes may not be used in the sequence itself.

Table 2: List of Modified Nucleotides

Symbol	Meaning
ac4c	4-acetylcytidine
chm5u	5-(carboxyhydroxymethyl)uridine
cm	2'-O-methylcytidine
cmnm5s 2u	5-carboxymethylaminomethyl-2-thio-uridine
cmnm5u	5-carboxymethylaminomethyluridine
d	dihydrouridine
fm	2'-O-methylpseudouridine
gal q	beta, D-galactosylqueuosine
gm	2'-O-methylguanosine
i	inosine
i6a	N6-isopentenyladenosine
m1a	1-methyladenosine
m1f	1-methylpseudouridine
m1g	1-methylguanosine
m1i	1-methylinosine
m22g	2,2-dimethylguanosine
m2a	2-methyladenosine
m2g	2-methylguanosine
m3c	3-methylcytidine
m5c	5-methylcytidine
m6a	N6-methyladenosine
m7g	7-methylguanosine
mam5u	5-methylaminomethyluridine
mam5s2 u	5-methoxyaminomethyl-2-thiouridine
man q	beta, D-mannosylqueuosine
mcm5s2 u	5-methoxycarbonylmethyl-2-thiouri-dine
mcm5u	5-methoxycarbonylmethyluridine
mo5u	5-methoxyuridine
ms2i6a	2-methylthio-N6-isopentenyladenosine
ms2t6a	N-((9-beta-D-ribofuranosyl-2-meth-ylthiopurine-6-yl)carbamoyl)threonine
mt6a	N-((9-beta-D-ribofuranosylpurine-6-yl)N-methylcarbamoyl)threonine
mv	uridine-5-oxyacetic acid-methylester
o5u	uridine-5-oxyacetic acid
osyw	wybutoxosine
p	pseudouridine
q	queuosine
s2t	5-methyl-2-thiouridine
s2c	2-thiocytidine
s2t	5-methyl-2-thiouridine
s2u	2-thiouridine
s4u	4-thiouridine
t	5-methyluridine
t6a	N-((9-beta-D-ribofuranosylpurine-6-yl)-carbamoyl)threonine
tm	2'-O-methyl-5-methyluridine
um	2'-O-methyluridine
yw	wybutosine
x	3-(3-amino-3-carboxy-propyl)uridine, (acp3)u

The examiner will accept the conclusion set forth in a viability statement issued by a depository recognized under § 1.803(a).

37 CFR 1.807 requires that the deposit of biological material that is capable of self-replication either directly or indirectly must be viable at the time of deposit and during the term of deposit. This requirement for viability is essentially a requirement that the deposited material is capable of reproduction. For the purpose of making a deposit under these rules, there is no requirement that evidence be provided that the deposited material is capable or has the ability to perform any function described in the patent application. However, as with any other issue of description or enablement, if the examiner has evidence or reason to question the objective statements made in the patent application, applicants may be required to demonstrate that the deposited biological material will perform in the manner described.

Under the Budapest Treaty, there is a requirement that the deposit be tested for viability before it is accepted. Thus, a mere statement by an applicant, an authorized representative of applicant or the assignee that the deposit has been accepted under the Budapest Treaty would satisfy 37 CFR 1.807.

For each deposit which is not made under the Budapest Treaty, a viability statement must be filed in the patent application and contain the information listed in paragraph (b) of this section. Under 37 CFR 1.807(c), the examiner will accept the conclusion set forth in a viability statement which is issued by a depository recognized under 37 CFR 1.803(a). If the viability test indicates that the deposit is not viable upon receipt, or the examiner cannot, for scientific or other valid reasons, accept the statement of viability received from the applicant, the examiner shall so notify the applicant stating the reasons for not accepting the statement and proceed with the examination process as if no deposit had been made.

2410 Furnishing of Samples

37 CFR 1.808. Furnishing of samples.

(a) A deposit must be made under conditions that assure that:

(1) Access to the deposit will be available during pendency of the patent application making reference to the deposit to one determined by the Commissioner to be entitled thereto under § 1.14 and 35 U.S.C. 122, and

(2) Subject to paragraph (b) of this section, all restrictions imposed by the depositor on the availability to the public of the deposited material will be irrevocably removed upon the granting of the patent.

(b) The depositor may contract with the depository to require that samples of a deposited biological material shall be furnished only if a request for a sample, during the term of the patent:

(1) Is in writing or other tangible form and dated;

(2) Contains the name and address of the requesting party and the accession number of the deposit; and

(3) Is communicated in writing by the depository to the depositor along with the date on which the sample was furnished and the name and address of the party to whom the sample was furnished.

(c) Upon request made to the Office, the Office will certify whether a deposit has been stated to have been made under conditions which make it available to the public as of the issue date of the patent grant provided the request contains:

(1) The name and address of the depository;

(2) The accession number given to the deposit;

(3) The patent number and issue date of the patent referring to the deposit; and

(4) The name and address of the requesting party.

2410.01 Conditions of Deposit

37 CFR 1.808 requires that the deposit of biological material be made under two conditions:

(A) access to the deposit will be available during pendency of the patent application making reference to the deposit to one determined by the Commissioner to be entitled thereto under 37 CFR 1.14 and 35 U.S.C. 122, and

(B) with one exception, that all restrictions imposed by the depositor on the availability to the public of the deposited biological material be irrevocably removed upon the granting of the patent.

The one exception that is permitted is specified in 37 CFR 1.808(b) which permits the depositor to contract with the depository to require that samples of a deposited biological material shall be furnished only if a request for a sample, during the term of the patent, meets any one or all of the three conditions specified in this paragraph. These conditions are:

(A) the request is in writing or other tangible form and dated; and/or

(B) the request contains the name and address of the requesting party and the accession number of the deposit; and/or

(C) the request is communicated in writing by the depository to the depositor along with the date on which the sample was furnished and the name and

account any such progress. This progress will probably be reflected in the refinement of or liberalization of the rules. For example, progress in the area of the standardization of sequence data will likely result in a more comprehensive rule. For example, the D-amino acids and branched sequences that are currently excluded from the rule may, in the future, be brought within the scope of the rule once the necessary standardization technology becomes available. As a further example, the computer readable form is currently limited to certain forms of electronic media, but it can readily be seen that progress in the technology for developing databases of the type the Office has envisioned will likely permit a broadening of the permissible types of computer readable forms that may be submitted. The same can be said for the computer/operating-system configurations that are currently permitted by the rules. As the Office becomes able to provide greater refinement and liberality in these areas, the Office will do so by the publication of notices in the *Official Gazette* or formal rulemaking proposals, as appropriate.

2422 Nucleotide and/or Amino Acid Sequence Disclosures in Patent Applications

37 CFR 1.821. Nucleotide and/or amino acid sequence disclosures in patent applications.

(a) Nucleotide and/or amino acid sequences as used in §§ 1.821 through 1.825 are interpreted to mean an unbranched sequence of four or more amino acids or an unbranched sequence of ten or more nucleotides. Branched sequences are specifically excluded from this definition. Sequences with fewer than four specifically defined nucleotides or amino acids are specifically excluded from this section. "Specifically defined" means those amino acids other than "Xaa" and those nucleotide bases other than "n" defined in accordance with the World Intellectual Property Organization (WIPO) Handbook on Industrial Property Information and Documentation, Standard ST.25: Standard for the Presentation of Nucleotide and Amino Acid Sequence Listings in Patent Applications (1998), including Tables 1 through 6 in Appendix 2, herein incorporated by reference. (Hereinafter "WIPO Standard ST.25 (1998)"). This incorporation by reference was approved by the Director of the Federal Register in accordance with 5 U.S.C. 552(a) and 1 CFR part 51. Copies of WIPO Standard ST.25 (1998) may be obtained from the World Intellectual Property Organization; 34 chemin des Colombettes; 1211 Geneva 20 Switzerland. Copies of ST.25 may be inspected at the Patent Search Room; Crystal Plaza 3, Lobby Level; 2021 South Clark Place; Arlington, VA 22202. Copies may also be inspected at the Office of the Federal Register, 800 North Capitol Street, NW, Suite 700, Washington, DC. Nucleotides and amino acids are further defined as follows:

(1) *Nucleotides:* Nucleotides are intended to embrace only those nucleotides that can be represented using the symbols set forth in WIPO Standard ST.25 (1998), Appendix 2, Table 1. Modifications, *e.g.*, methylated bases, may be described as set forth in WIPO Standard ST.25 (1998), Appendix 2, Table 2, but shall not be shown explicitly in the nucleotide sequence.

(2) *Amino acids:* Amino acids are those L-amino acids commonly found in naturally occurring proteins and are listed in WIPO Standard ST.25 (1998), Appendix 2, Table 3. Those amino acid sequences containing D-amino acids are not intended to be embraced by this definition. Any amino acid sequence that contains post-translationally modified amino acids may be described as the amino acid sequence that is initially translated using the symbols shown in WIPO Standard ST.25 (1998), Appendix 2, Table 3 with the modified positions; *e.g.*, hydroxylations or glycosylations, being described as set forth in WIPO Standard ST.25 (1998), Appendix 2, Table 4, but these modifications shall not be shown explicitly in the amino acid sequence. Any peptide or protein that can be expressed as a sequence using the symbols in WIPO Standard ST.25 (1998), Appendix 2, Table 3 in conjunction with a description in the Feature section to describe, for example, modified linkages, cross links and end caps, non-peptidyl bonds, etc., is embraced by this definition.

(b) Patent applications which contain disclosures of nucleotide and/or amino acid sequences, in accordance with the definition in paragraph (a) of this section, shall, with regard to the manner in which the nucleotide and/or amino acid sequences are presented and described, conform exclusively to the requirements of §§ 1.821 through 1.825.

(c) Patent applications which contain disclosures of nucleotide and/or amino acid sequences must contain, as a separate part of the disclosure, a paper copy disclosing the nucleotide and/or amino acid sequences and associated information using the symbols and format in accordance with the requirements of §§ 1.822 and 1.823. This paper copy is hereinafter referred to as the "Sequence Listing." Each sequence disclosed must appear separately in the "Sequence Listing." Each sequence set forth in the "Sequence Listing" shall be assigned a separate sequence identifier. The sequence identifiers shall begin with 1 and increase sequentially by integers. If no sequence is present for a sequence identifier, the code "000" shall be used in place of the sequence. The response for the numeric identifier <160> shall include the total number of SEQ ID NOs, whether followed by a sequence or by the code "000."

(d) Where the description or claims of a patent application discuss a sequence that is set forth in the "Sequence Listing" in accordance with paragraph (c) of this section, reference must be made to the sequence by use of the sequence identifier, preceded by "SEQ ID NO:" in the text of the description or claims, even if the sequence is also embedded in the text of the description or claims of the patent application.

(e) A copy of the "Sequence Listing" referred to in paragraph (c) of this section must also be submitted in computer readable form in accordance with the requirements of § 1.824. The computer readable form is a copy of the "Sequence Listing" and

future, the applicant would be well-advised to make a deposit thereof before any patent issues. Similarly, where a patent owner has any doubt whether a deposit referred to in the specification is a biological material necessary to satisfy 35 U.S.C. 112 and, if the material is necessary, whether it is otherwise known and readily available, the patent owner would be well-advised to follow the procedures set forth in 37 CFR 1.805(b) and 37 CFR 1.805(c) after receiving the notice specified in those paragraphs.

2411.05 Content of Application with Respect to Deposited Material

37 CFR 1.809(d) sets forth the requirements for the content of the specification with respect to a deposited biological material. Specifically, the specification shall contain the accession number for the deposit, the date of the deposit, the name and address of the depository, and a description of the deposited biological material sufficient to specifically identify it and to permit examination. The description also must be sufficient to permit verification that the deposited biological material is in fact that disclosed. Once the patent issues, the description must be sufficient to aid in the resolution of questions of infringement. As a general rule, the more information that is provided about a particular deposited biological material, the better the examiner will be able to compare the identity and characteristics of the deposited biological material with the prior art.

2420 The Requirements for Patent Applications Containing Nucleotide Sequence and/or Amino Acid Sequence Disclosures - the Sequence Rules

Prior to the effective date (October 1, 1990) and implementation of the sequence rules (37 CFR 1.821 through 1.825), applications for patents that included nucleotide or amino acid sequence information posed special problems for the Office. While not related to the disclosure requirements of an invention, problems existed in the presentation, examination and printing of nucleotide and amino acid sequence data that appeared in patent applications because of the lack of uniformity in submission of sequence data to the Office and the impracticality of properly searching and examining sequences submitted in paper form. In summary, the diversity and complexity of nucleotide and amino acid sequence data resulted in searching and analysis difficulties both within the Office and outside the Office, decreased accuracy of search and reproduction and increased costs. These difficulties made the development and implementation of the sequence rules a critical necessity for the Office. As such, the Office amended its regulations to establish a standardized format for descriptions of nucleotide and amino acid sequence data submitted as a part of patent applications, in conjunction with the required submission of that data in computer readable form. The final rules were published in the *Federal Register* at 55 FR 18230 (May 1, 1990) and in the *Official Gazette* at 1114 O.G. 29 (May 15, 1990). The sequence rules went into effect on October 1, 1990. The sequence rules were subsequently revised effective July 1, 1998. See 63 FR 29634 (June 1, 1998) and 1121 O.G. 82 (June 23, 1998).

The sequence rules were further revised on September 8, 2000 to allow submissions of the nucleotide and/or amino acid sequences and associated information on compact discs. See 65 FR 54604 (Sept. 8, 2000) and 1238 O.G. 145 (Sept. 19, 2000). See also MPEP § 608.05 and § 2422.03.

2421 Overview of the Sequence Rules

2421.01 Applications Affected

The sequence rules require the use of standard symbols and a standard format for sequence data in most sequence-type patent applications. They further require the submission of that data in computer readable form. Compliance is required for most disclosures of sequence data in new applications filed on or after October 1, 1990. The revised sequence rules apply to most new applications filed on or after July 1, 1998. See the final rule publications as cited in MPEP § 2420 for more detailed applicability information.

The Office encourages voluntary compliance for applications not subject to the rules, but all aspects of the rules must be complied with before data will be entered into the database. This includes submission of all statements required by the rules. In exceptional circumstances, it should be noted that the Office may waive the rules via a 37 CFR 1.183 petition.

future, the applicant would be well-advised to make a deposit thereof before any patent issues. Similarly, where a patent owner has any doubt whether a deposit referred to in the specification is a biological material necessary to satisfy 35 U.S.C. 112 and, if the material is necessary, whether it is otherwise known and readily available, the patent owner would be well-advised to follow the procedures set forth in 37 CFR 1.805(b) and 37 CFR 1.805(c) after receiving the notice specified in those paragraphs.

2411.05 Content of Application with Respect to Deposited Material

37 CFR 1.809(d) sets forth the requirements for the content of the specification with respect to a deposited biological material. Specifically, the specification shall contain the accession number for the deposit, the date of the deposit, the name and address of the depository, and a description of the deposited biological material sufficient to specifically identify it and to permit examination. The description also must be sufficient to permit verification that the deposited biological material is in fact that disclosed. Once the patent issues, the description must be sufficient to aid in the resolution of questions of infringement. As a general rule, the more information that is provided about a particular deposited biological material, the better the examiner will be able to compare the identity and characteristics of the deposited biological material with the prior art.

2420 The Requirements for Patent Applications Containing Nucleotide Sequence and/or Amino Acid Sequence Disclosures - the Sequence Rules

Prior to the effective date (October 1, 1990) and implementation of the sequence rules (37 CFR 1.821 through 1.825), applications for patents that included nucleotide or amino acid sequence information posed special problems for the Office. While not related to the disclosure requirements of an invention, problems existed in the presentation, examination and printing of nucleotide and amino acid sequence data that appeared in patent applications because of the lack of uniformity in submission of sequence data to the Office and the impracticality of properly searching and examining sequences submitted in paper form. In summary, the diversity and complexity of nucleotide and amino acid sequence data resulted in searching and analysis difficulties both within the Office and outside the Office, decreased accuracy of search and reproduction and increased costs. These difficulties made the development and implementation of the sequence rules a critical necessity for the Office. As such, the Office amended its regulations to establish a standardized format for descriptions of nucleotide and amino acid sequence data submitted as a part of patent applications, in conjunction with the required submission of that data in computer readable form. The final rules were published in the *Federal Register* at 55 FR 18230 (May 1, 1990) and in the *Official Gazette* at 1114 O.G. 29 (May 15, 1990). The sequence rules went into effect on October 1, 1990. The sequence rules were subsequently revised effective July 1, 1998. See 63 FR 29634 (June 1, 1998) and 1121 O.G. 82 (June 23, 1998).

The sequence rules were further revised on September 8, 2000 to allow submissions of the nucleotide and/or amino acid sequences and associated information on compact discs. See 65 FR 54604 (Sept. 8, 2000) and 1238 O.G. 145 (Sept. 19, 2000). See also MPEP § 608.05 and § 2422.03.

2421 Overview of the Sequence Rules

2421.01 Applications Affected

The sequence rules require the use of standard symbols and a standard format for sequence data in most sequence-type patent applications. They further require the submission of that data in computer readable form. Compliance is required for most disclosures of sequence data in new applications filed on or after October 1, 1990. The revised sequence rules apply to most new applications filed on or after July 1, 1998. See the final rule publications as cited in MPEP § 2420 for more detailed applicability information.

The Office encourages voluntary compliance for applications not subject to the rules, but all aspects of the rules must be complied with before data will be entered into the database. This includes submission of all statements required by the rules. In exceptional circumstances, it should be noted that the Office may waive the rules via a 37 CFR 1.183 petition.

account any such progress. This progress will probably be reflected in the refinement of or liberalization of the rules. For example, progress in the area of the standardization of sequence data will likely result in a more comprehensive rule. For example, the D-amino acids and branched sequences that are currently excluded from the rule may, in the future, be brought within the scope of the rule once the necessary standardization technology becomes available. As a further example, the computer readable form is currently limited to certain forms of electronic media, but it can readily be seen that progress in the technology for developing databases of the type the Office has envisioned will likely permit a broadening of the permissible types of computer readable forms that may be submitted. The same can be said for the computer/operating-system configurations that are currently permitted by the rules. As the Office becomes able to provide greater refinement and liberality in these areas, the Office will do so by the publication of notices in the *Official Gazette* or formal rulemaking proposals, as appropriate.

2422 Nucleotide and/or Amino Acid Sequence Disclosures in Patent Applications

37 CFR 1.821. Nucleotide and/or amino acid sequence disclosures in patent applications.

(a) Nucleotide and/or amino acid sequences as used in §§ 1.821 through 1.825 are interpreted to mean an unbranched sequence of four or more amino acids or an unbranched sequence of ten or more nucleotides. Branched sequences are specifically excluded from this definition. Sequences with fewer than four specifically defined nucleotides or amino acids are specifically excluded from this section. "Specifically defined" means those amino acids other than "Xaa" and those nucleotide bases other than "n" defined in accordance with the World Intellectual Property Organization (WIPO) Handbook on Industrial Property Information and Documentation, Standard ST.25: Standard for the Presentation of Nucleotide and Amino Acid Sequence Listings in Patent Applications (1998), including Tables 1 through 6 in Appendix 2, herein incorporated by reference. (Hereinafter "WIPO Standard ST.25 (1998)"). This incorporation by reference was approved by the Director of the Federal Register in accordance with 5 U.S.C. 552(a) and 1 CFR part 51. Copies of WIPO Standard ST.25 (1998) may be obtained from the World Intellectual Property Organization; 34 chemin des Colombettes; 1211 Geneva 20 Switzerland. Copies of ST.25 may be inspected at the Patent Search Room; Crystal Plaza 3, Lobby Level; 2021 South Clark Place; Arlington, VA 22202. Copies may also be inspected at the Office of the Federal Register, 800 North Capitol Street, NW, Suite 700, Washington, DC. Nucleotides and amino acids are further defined as follows:

(1) *Nucleotides:* Nucleotides are intended to embrace only those nucleotides that can be represented using the symbols set forth in WIPO Standard ST.25 (1998), Appendix 2, Table 1. Modifications, *e.g.*, methylated bases, may be described as set forth in WIPO Standard ST.25 (1998), Appendix 2, Table 2, but shall not be shown explicitly in the nucleotide sequence.

(2) *Amino acids:* Amino acids are those L-amino acids commonly found in naturally occurring proteins and are listed in WIPO Standard ST.25 (1998), Appendix 2, Table 3. Those amino acid sequences containing D-amino acids are not intended to be embraced by this definition. Any amino acid sequence that contains post-translationally modified amino acids may be described as the amino acid sequence that is initially translated using the symbols shown in WIPO Standard ST.25 (1998), Appendix 2, Table 3 with the modified positions; *e.g.*, hydroxylations or glycosylations, being described as set forth in WIPO Standard ST.25 (1998), Appendix 2, Table 4, but these modifications shall not be shown explicitly in the amino acid sequence. Any peptide or protein that can be expressed as a sequence using the symbols in WIPO Standard ST.25 (1998), Appendix 2, Table 3 in conjunction with a description in the Feature section to describe, for example, modified linkages, cross links and end caps, non-peptidyl bonds, etc., is embraced by this definition.

(b) Patent applications which contain disclosures of nucleotide and/or amino acid sequences, in accordance with the definition in paragraph (a) of this section, shall, with regard to the manner in which the nucleotide and/or amino acid sequences are presented and described, conform exclusively to the requirements of §§ 1.821 through 1.825.

(c) Patent applications which contain disclosures of nucleotide and/or amino acid sequences must contain, as a separate part of the disclosure, a paper copy disclosing the nucleotide and/or amino acid sequences and associated information using the symbols and format in accordance with the requirements of §§ 1.822 and 1.823. This paper copy is hereinafter referred to as the "Sequence Listing." Each sequence disclosed must appear separately in the "Sequence Listing." Each sequence set forth in the "Sequence Listing" shall be assigned a separate sequence identifier. The sequence identifiers shall begin with 1 and increase sequentially by integers. If no sequence is present for a sequence identifier, the code "000" shall be used in place of the sequence. The response for the numeric identifier <160> shall include the total number of SEQ ID NOs, whether followed by a sequence or by the code "000."

(d) Where the description or claims of a patent application discuss a sequence that is set forth in the "Sequence Listing" in accordance with paragraph (c) of this section, reference must be made to the sequence by use of the sequence identifier, preceded by "SEQ ID NO:" in the text of the description or claims, even if the sequence is also embedded in the text of the description or claims of the patent application.

(e) A copy of the "Sequence Listing" referred to in paragraph (c) of this section must also be submitted in computer readable form in accordance with the requirements of § 1.824. The computer readable form is a copy of the "Sequence Listing" and

The examiner will accept the conclusion set forth in a viability statement issued by a depository recognized under § 1.803(a).

37 CFR 1.807 requires that the deposit of biological material that is capable of self-replication either directly or indirectly must be viable at the time of deposit and during the term of deposit. This requirement for viability is essentially a requirement that the deposited material is capable of reproduction. For the purpose of making a deposit under these rules, there is no requirement that evidence be provided that the deposited material is capable or has the ability to perform any function described in the patent application. However, as with any other issue of description or enablement, if the examiner has evidence or reason to question the objective statements made in the patent application, applicants may be required to demonstrate that the deposited biological material will perform in the manner described.

Under the Budapest Treaty, there is a requirement that the deposit be tested for viability before it is accepted. Thus, a mere statement by an applicant, an authorized representative of applicant or the assignee that the deposit has been accepted under the Budapest Treaty would satisfy 37 CFR 1.807.

For each deposit which is not made under the Budapest Treaty, a viability statement must be filed in the patent application and contain the information listed in paragraph (b) of this section. Under 37 CFR 1.807(c), the examiner will accept the conclusion set forth in a viability statement which is issued by a depository recognized under 37 CFR 1.803(a). If the viability test indicates that the deposit is not viable upon receipt, or the examiner cannot, for scientific or other valid reasons, accept the statement of viability received from the applicant, the examiner shall so notify the applicant stating the reasons for not accepting the statement and proceed with the examination process as if no deposit had been made.

2410 Furnishing of Samples

37 CFR 1.808. Furnishing of samples.

(a) A deposit must be made under conditions that assure that:

(1) Access to the deposit will be available during pendency of the patent application making reference to the deposit to one determined by the Commissioner to be entitled thereto under § 1.14 and 35 U.S.C. 122, and

(2) Subject to paragraph (b) of this section, all restrictions imposed by the depositor on the availability to the public of the deposited material will be irrevocably removed upon the granting of the patent.

(b) The depositor may contract with the depository to require that samples of a deposited biological material shall be furnished only if a request for a sample, during the term of the patent:

(1) Is in writing or other tangible form and dated;

(2) Contains the name and address of the requesting party and the accession number of the deposit; and

(3) Is communicated in writing by the depository to the depositor along with the date on which the sample was furnished and the name and address of the party to whom the sample was furnished.

(c) Upon request made to the Office, the Office will certify whether a deposit has been stated to have been made under conditions which make it available to the public as of the issue date of the patent grant provided the request contains:

(1) The name and address of the depository;

(2) The accession number given to the deposit;

(3) The patent number and issue date of the patent referring to the deposit; and

(4) The name and address of the requesting party.

2410.01 Conditions of Deposit

37 CFR 1.808 requires that the deposit of biological material be made under two conditions:

(A) access to the deposit will be available during pendency of the patent application making reference to the deposit to one determined by the Commissioner to be entitled thereto under 37 CFR 1.14 and 35 U.S.C. 122, and

(B) with one exception, that all restrictions imposed by the depositor on the availability to the public of the deposited biological material be irrevocably removed upon the granting of the patent.

The one exception that is permitted is specified in 37 CFR 1.808(b) which permits the depositor to contract with the depository to require that samples of a deposited biological material shall be furnished only if a request for a sample, during the term of the patent, meets any one or all of the three conditions specified in this paragraph. These conditions are:

(A) the request is in writing or other tangible form and dated; and/or

(B) the request contains the name and address of the requesting party and the accession number of the deposit; and/or

(C) the request is communicated in writing by the depository to the depositor along with the date on which the sample was furnished and the name and

the corresponding unmodified bases in the sequence itself, if the modified base is one of those listed below and the modification is further described in the Feature section of the Sequence Listing. The codes from the list below may be used in the description (i.e., the specification and drawing, or in the Sequence Listing) but these codes may not be used in the sequence itself.

Table 2: List of Modified Nucleotides

Symbol	Meaning
ac4c	4-acetylcytidine
chm5u	5-(carboxyhydroxymethyl)uridine
cm	2'-O-methylcytidine
cmnm5s 2u	5-carboxymethylaminomethyl-2-thio-uridine
cmnm5u	5-carboxymethylaminomethyluridine
d	dihydrouridine
fm	2'-O-methylpseudouridine
gal q	beta, D-galactosylqueuosine
gm	2'-O-methylguanosine
i	inosine
i6a	N6-isopentenyladenosine
m1a	1-methyladenosine
m1f	1-methylpseudouridine
m1g	1-methylguanosine
m1i	1-methylinosine
m22g	2,2-dimethylguanosine
m2a	2-methyladenosine
m2g	2-methylguanosine
m3c	3-methylcytidine
m5c	5-methylcytidine
m6a	N6-methyladenosine
m7g	7-methylguanosine
mam5u	5-methylaminomethyluridine
mam5s2 u	5-methoxyaminomethyl-2-thiouridine
man q	beta, D-mannosylqueuosine
mcm5s2 u	5-methoxycarbonylmethyl-2-thiouri-dine
mcm5u	5-methoxycarbonylmethyluridine
mo5u	5-methoxyuridine
ms2i6a	2-methylthio-N6-isopentenyladenosine
ms2t6a	N-((9-beta-D-ribofuranosyl-2-meth-ylthiopurine-6-yl)carbamoyl)threonine
mt6a	N-((9-beta-D-ribofuranosylpurine-6-yl)N-methylcarbamoyl)threonine
mv	uridine-5-oxyacetic acid-methylester
o5u	uridine-5-oxyacetic acid
osyw	wybutoxosine
p	pseudouridine
q	queuosine
s2t	5-methyl-2-thiouridine
s2c	2-thiocytidine
s2t	5-methyl-2-thiouridine
s2u	2-thiouridine
s4u	4-thiouridine
t	5-methyluridine
t6a	N-((9-beta-D-ribofuranosylpurine-6-yl)-carbamoyl)threonine
tm	2'-O-methyl-5-methyluridine
um	2'-O-methyluridine
yw	wybutosine
x	3-(3-amino-3-carboxy-propyl)uridine, (acp3)u

deposit during the pendency of an application than after the patent is granted. Replacement will typically take place where the earlier deposit is no longer viable. The term "supplement" is directed to those situations where the earlier deposit is still viable in the sense that it is alive and capable of replication either directly or indirectly, but has lost a quality (e.g., purity, functionality) it allegedly possessed at the time the application was filed.

2407.01 In a Pending Application

37 CFR 1.805(a) relates to the procedure for replacing or supplementing a deposit with respect to a pending application or a patent. An applicant or patent owner is required to notify the Office when it obtains information that the depository possessing a deposit cannot furnish samples of the deposit to satisfy the requirements of 35 U.S.C. 112. When the Office is so informed or otherwise becomes aware that samples of the deposited material cannot be furnished by the depository, the examiner will treat the application or reexamination proceeding, whichever is applicable, as if no deposit existed. A replacement or supplemental deposit will be accepted if it meets all the requirements for making an original deposit.

It should be noted that in a pending application, an applicant need not replace the identical material previously deposited, but may make an original deposit of a biological material which is specifically identified and described in the application as filed. Whether this alternative deposit will meet the requirements of 35 U.S.C. 112 with respect to the claimed subject matter must be resolved by the examiner on a case-by-case basis. The conditions in 37 CFR 1.802(b) and 37 CFR 1.804(b) must be satisfied.

2407.02 After a Patent Has Issued

A replacement deposit made in connection with an application for reissue patent or a reexamination proceeding or both shall not be accepted unless a certificate of correction is requested which meets the terms of 37 CFR 1.805(b) and 37 CFR 1.805 (c) for replacement deposits. Any correction made to the original patent will be automatically incorporated into the reissued or reexamined patent unless changes are made during examination of the reissue application or reexamination proceeding.

37 CFR 1.805(b) and 37 CFR 1.805(c) specify the procedures that a patent owner may follow to ensure that a patent contains the appropriate information about a deposited biological material in the event that a replacement or supplemental deposit is made after the patent is granted. 37 CFR 1.805(b) describes the information which must be contained in the certificate of correction, whereas 37 CFR 1.805(c) describes the information which must be provided in the request to make the correction.

2407.03 Failure to Replace

37 CFR 1.805(d) sets forth the Office position that the failure to make a replacement deposit in a case pending before the Office, for example a reissue or reexamination proceeding, where a deposit is considered to be necessary to satisfy the requirements of 35 U.S.C. 112, shall cause the application or patent involved to be treated in any Office proceeding as if no deposit were made. The provisions of 37 CFR 1.805(g) indicate that a replacement need not be made where, at the point in time when replacement would otherwise be necessary, access to the necessary biological material was otherwise available. For example, a replacement deposit would not be required under the circumstances where access to the necessary biological material was established through commercial suppliers.

2407.04 Treatment of Replacement

37 CFR 1.805(e) indicates that the Office will apply a rebuttable presumption of identity between the replacement deposit and an original deposit where a patent making reference to the deposit is relied on during any Office proceeding. This means that where a replacement deposit is permitted and made, the examiner will assume that the same material as described in the patent is accessible from the identified depository unless evidence to the contrary comes to the attention of the Office.

An applicant for patent may make a replacement deposit during the pendency of the application for any reason. The provisions of 37 CFR 1.805(f) recognize that since an original deposit may be made during the pendency of the application subject to the conditions of 37 CFR 1.809, a replacement deposit logically cannot be held to any higher standard or any further requirements.

Ide	Isodesmosine
aIle	allo-Isoleucine
MeGly	N-Methylglycine, sarcosine
MeIle	N-Methylisoleucine
MeLys	6-N-Methyllysine
MeVal	N-Methylvaline

Nva	Norvaline
Nle	Norleucine
Orn	Ornithine

WIPO Standard ST.25 (1998), Appendix 2, Table 5, provides for feature keys related to DNA sequences.

Table 5: List of Feature Keys Related to Nucleotide Sequences

Key	Description
allele	a related individual or strain contains stable, alternative forms of the same gene which differs from the presented sequence at this location (and perhaps others)
attenuator	(1) region of DNA at which regulation of termination of transcription occurs, which controls the expression of some bacterial operons; (2) sequence segment located between the promoter and the first structural gene that causes partial termination of transcription
C_region	constant region of immunoglobulin light and heavy chains, and T-cell receptor alpha, beta, and gamma chains; includes one or more exons depending on the particular chain
CAAT_signal	CAAT box; part of a conserved sequence located about 75 bp up-stream of the start point of eukaryotic transcription units which may be involved in RNA polymerase binding; consensus=GG (C or T) CAATCT
CDS	coding sequence; sequence of nucleotides that corresponds with the sequence of amino acids in a protein (location includes stop codon); feature includes amino acid conceptual translation
conflict	independent determinations of the "same" sequence differ at this site or region
D-loop	displacement loop; a region within mitochondrial DNA in which a short stretch of RNA is paired with one strand of DNA, displacing the original partner DNA strand in this region; also used to describe the displacement of a region of one strand of duplex DNA by a single stranded invader in the reaction catalyzed by RecA protein
D-segment	diversity segment of immunoglobulin heavy chain, and T-cell receptor beta chain
enhancer	a cis-acting sequence that increases the utilization of (some) eukaryotic promoters, and can function in either orientation and in any location (upstream or downstream) relative to the promoter

subject to the conditions of 37 CFR 1.809. Where a deposit is needed to satisfy the requirements of 35 U.S.C. 112 and it is made during the pendency of the application, it must be made no later than the time period set by the examiner at the time the Notice of Allowance and Issue Fee Due is mailed. A necessary deposit need not be made by an applicant until the application is in condition for allowance so long as the applicant provides a written assurance that an acceptable deposit will be made on or before the payment of the issue fee. This written assurance must provide sufficiently detailed information to convince the examiner that there is no outstanding issue regarding deposits that needs to be resolved.

These rules are equally applicable in the cases of international and national stage applications filed under the Patent Cooperation Treaty. Insofar as the rules do not permit post-issuance original deposits, the failure to make an original deposit in an application cannot be cured by filing a reissue application or instituting a reexamination proceeding. However, if an amendment of claims in a reexamination proceeding raises the need for a deposit, an original deposit may be made during the reexamination proceeding.

2406.01 Description in Application Specification

37 CFR 1.804(a) specifies not only a permissible time frame for making an original deposit, but also specifies that the biological material deposited must be specifically identified in the application for patent as filed. The requirement for a specific identification is consistent with the description requirement of the first paragraph of 35 U.S.C. 112 and provides an antecedent basis for the biological material which either has been or will be deposited before the patent is granted.

The description in the Lundak application as filed (now patent 4,594,325) provides a suitable illustration of the specific identification and description which are required in an application as filed. In that application, an immortal B-cell line was disclosed and claimed. The cell line was referred to in the application, as filed, as WI-L2-729 HF2. The methods of obtaining and using this cell line were also described in the application as filed. A deposit of the cell line was made with the American Type Culture Collection (ATCC) about a week after the application was filed in the United States. The United States Court of Appeals for the Federal Circuit held that the requirements of access by the Office to a sample of the cell line during pendency, and public access after grant, were met by Lundak's procedures. The Court further held that the addition of information designating the depository, accession number, and deposit date of the deposited cell line in ATCC after the filing date did not violate the prohibition against new matter in 35 U.S.C. 132. *In re Lundak*, 773 F.2d 1216, 227 USPQ 90 (Fed. Cir. 1985). However, it must be clear from the application as filed that the invention claimed and described in the specification "was fully capable of being reduced to practice (i.e., no technological problems, the resolution of which would require more than ordinary skill and reasonable time, remained in order to obtain an operative, useful process)." *Feldman v. Aunstrup*, 517 F.2d 1351, 1355, 186 USPQ 108, 113 (CCPA 1975), *cert. denied*, 424 U.S. 912 (1976).

2406.02 Deposit After Filing Date - Corroboration

When the original deposit is made after the effective filing date of an application for patent, an applicant is required to promptly submit a statement from a person in a position to corroborate that the biological material which is deposited is a biological material specifically identified in the application (the filing date of which is relied upon) as filed. The nature of this corroboration will depend on the circumstances in the particular application under consideration, including the length of time between the application filing date and the date of deposit. While few, if any, situations can be imagined where the description requirement of 35 U.S.C. 112 can be satisfied where the biological material was not in existence at the time of filing, the rules will not preclude such a situation as there is no requirement in the patent law that an actual reduction to practice occur as a condition precedent to filing a patent application.

Key	Description
misc_structure	any secondary or tertiary structure or conformation that cannot be described by other Structure keys (stem_loop and D-loop)
modified_base	the indicated nucleotide is a modified nucleotide and should be substituted for by the indicated molecule (given in the mod_base qualifier value)
mRNA	messenger RNA; includes 5' untranslated region (5'UTR), coding sequences (CDS, exon) and 3' untranslated region (3'UTR)
mutation	a related strain has an abrupt, inheritable change in the sequence at this location
N_region	extra nucleotides inserted between rearranged immunoglobulin segments
old_sequence	the presented sequence revises a previous version of the sequence at this location
polyA_signal	recognition region necessary for endonuclease cleavage of an RNA transcript that is followed by polyadenylation; consensus=AATAAA
polyA_site	site on an RNA transcript to which will be added adenine residues by post-transcriptional polyadenylation
precursor_RNA	any RNA species that is not yet the mature RNA product; may include 5' clipped region (5'clip), 5' untranslated region (5'UTR), coding sequences (CDS, exon), intervening sequences (intron), 3' untranslated region (3'UTR), and 3' clipped region (3'clip)
prim_transcript	primary (initial, unprocessed) transcript; includes 5' clipped region (5'clip), 5' untranslated region (5'UTR), coding sequences (CDS, exon), intervening sequences (intron), 3' untranslated region (3'UTR), and 3' clipped region (3'clip)
primer_bind	non-covalent primer binding site for initiation of replication, transcription, or reverse transcription; includes site(s) for synthetic, for example, PCR primer elements
promoter	region on a DNA molecule involved in RNA polymerase binding to initiate transcription
protein_bind	non-covalent protein binding site on nucleic acid
RBS	ribosome binding site
repeat_region	region of genome containing repeating units
repeat_unit	single repeat element
rep_origin	origin of replication; starting site for duplication of nucleic acid to give two identical copies
rRNA	mature ribosomal RNA; the RNA component of the ribonucleoprotein particle (ribosome) which assembles amino acids into proteins

Oosterstraat 1
Postbus 273
NL-3740 AG Baarn
Netherlands

China Center for Type Culture Collection (CCTCC)
Wuhan University
Wuhan 430072
China

China General Microbiological Culture
Center (CGMCC)
China Committee for Culture Collection of
Microorganisms
P.O. Box 2714
Beijing 100080
China

Colección Española de Cultivos Tipo (CECT)
Universidad de Valencia
Edificio de Investigación
Campus de Burjasot
46100 Burjasot (Valencia)
Spain

Collection Nationale De Cultures
De Micro-organismes (CNCM)
Institut Pasteur
28, rue du Dr Roux
75724 Paris Cédex 15
France

Collection of Industrial Yeasts DBVPG
Applied Microbiology Section
Department of Plant Biology
Faculty of Agriculture
University of Perugia
Borgo 20 Giugno, 74
06122 Perugia
Italy

Culture Collection of Algae and Protozoa (CCAP)
Institute of Freshwater Ecology
Windermere Laboratory
Ambleside, Cumbria LA22 0LP
United Kingdom and Dunstaffnage Marine Laboratory
P.O. Box 3
Oban, Argyll PA34 4AD
United Kingdom

Culture Collection of Yeasts (CCY)
Institute of Chemistry
Slovak Academy of Sciences
Dúbravská cesta 9
842 38 Bratislava,
Slovakia

Czech Collection of Microorganisms (CCM)
Masaryc University
ul. Tvrdého 14
602 00 Brno
Czech Republic

DSMZ-Deutsche Sammlung von Mikroorganismen
und Zellkulturen GmbH (DSMZ)
Mascheroder Weg 1b
D-38124 Braunschweig
Germany

European Collection of Cell Cultures (ECACC)
Vaccine Research and Production Laboratory
Public Health Laboratory Service
Centre for Applied Microbiology and Research
Porton Down
Salisbury, Wiltshire SP4 0JG
United Kingdom

Institute of Agriculture and Food Biotechnology (IAFB)
Collection of Industrial Microorganisms
Ul. Rakowiecka 36
02-532 Warsaw, Poland

International Mycological Institute (IMI)
Bakeham Lane
Englefield Green
Egham, Surrey TW20 9TY
United Kingdom

International Patent Organism Depositary (IPOD)
AIST Tsukuba Central 6
1-1, Higashi 1-chome
Tsukuba-shi, Ibaraki-Ken 305-8566
Japan

Korean Cell Line Research Foundation (KCLRF)
Cancer Research Institute
Seoul National University College of Medicine
28 Yungon-dong, Chongno-gu
Seoul 110-799
Republic of Korea

Key	Description
V_segment	variable segment of immunoglobulin light and heavy chains, and T-cell receptor alpha, beta, and gamma chains; codes for most of the variable region (V_region) and the last few amino acids of the leader peptide
variation	a related strain contains stable mutations from the same gene (for example, RFLPs, polymorphisms, etc.) which differ from the presented sequence at this location (and possibly others)
3'clip	3'-most region of a precursor transcript that is clipped off during processing
3'UTR	region at the 3' end of a mature transcript (following the stop codon) that is not translated into a protein
5'clip	5'-most region of a precursor transcript that is clipped off during processing
5'UTR	region at the 5' end of a mature transcript (preceding the initiation codon) that is not translated into a protein
-10_signal	pribnow box; a conserved region about 10 bp upstream of the start point of bacterial transcription units which may be involved in binding RNA polymerase; consensus=TAtAaT
-35_signal	a conserved hexamer about 35 bp upstream of the start point of bacterial transcription units; consensus=TTGACa [ ] or TGTTGACA [ ]

WIPO Standard ST.25 (1998), Appendix 2, Table 6 provides for feature keys related to protein sequences

Table 6: List of Feature Keys Related to Protein Sequences

Key	Description
CONFLICT	different papers report differing sequences
VARIANT	authors report that sequence variants exist
VARSPLIC	description of sequence variants produced by alternative splicing
MUTAGEN	site which has been experimentally altered
MOD_RES	post-translational modification of a residue
ACETYLATION	N-terminal or other
AMIDATION	generally at the C-terminal of a mature active peptide
BLOCKED	undetermined N- or C-terminal blocking group
FORMYLATION	of the N-terminal methionine

112, or that a deposit in accordance with these regulations is or was required. It should be noted, however, that a reference to a biological material, present in an application upon filing, may form the basis for making a deposit, where required, after the filing date of a given application but that the reference to the biological material, itself, cannot be added after filing without risking the prohibited introduction of new matter (35 U.S.C. 132). See the discussion of the Lundak application in MPEP § 2406.01.

2405 Acceptable Depository

37 CFR 1.803. Acceptable depository.

(a) A deposit shall be recognized for the purposes of these regulations if made in

(1) any International Depositary Authority (IDA) as established under the Budapest Treaty on the International Recognition of the Deposit of Microorganisms for the Purposes of Patent Procedure, or

(2) any other depository recognized to be suitable by the Office. Suitability will be determined by the Commissioner on the basis of the administrative and technical competence, and agreement of the depository to comply with the terms and conditions applicable to deposits for patent purposes. The Commissioner may seek the advice of impartial consultants on the suitability of a depository. The depository must:

(i) Have a continuous existence;

(ii) Exist independent of the control of the depositor;

(iii) Possess the staff and facilities sufficient to examine the viability of a deposit and store the deposit in a manner which ensures that it is kept viable and uncontaminated;

(iv) Provide for sufficient safety measures to minimize the risk of losing biological material deposited with it;

(v) Be impartial and objective;

(vi) Furnish samples of the deposited material in an expeditious and proper manner; and

(vii)Promptly notify depositors of its inability to furnish samples, and the reasons why.

(b) A depository seeking status under paragraph (a)(2) of this section must direct a communication to the Commissioner which shall:

(1) Indicate the name and address of the depository to which the communication relates;

(2) Contain detailed information as to the capacity of the depository to comply with the requirements of paragraph (a)(2) of this section, including information on its legal status, scientific standing, staff and facilities;

(3) Indicate that the depository intends to be available, for the purposes of deposit, to any depositor under these same conditions;

(4) Where the depository intends to accept for deposit only certain kinds of biological material, specify such kinds;

(5) Indicate the amount of any fees that the depository will, upon acquiring the status of suitable depository under paragraph (a)(2) of this section, charge for storage, viability statements and furnishings of samples of the deposit.

(c) A depository having status under paragraph (a)(2) of this section limited to certain kinds of biological material may extend such status to additional kinds of biological material by directing a communication to the Commissioner in accordance with paragraph (b) of this section. If a previous communication under paragraph (b) of this section is of record, items in common with the previous communication may be incorporated by reference.

(d) Once a depository is recognized to be suitable by the Commissioner or has defaulted or discontinued its performance under this section, notice thereof will be published in the Official Gazette of the Patent and Trademark Office.

37 CFR 1.803 indicates that a depository will be recognized as acceptable for the purposes of these regulations if it is either an International Depositary Authority (IDA) established under the Budapest Treaty, or if it is a depository recognized as suitable by the Commissioner. After the effective date of these regulations, a deposit of biological material which is made in a depository which is not recognized as acceptable under this regulation will not be considered as satisfying the requirements of 35 U.S.C. 112. See *Ex parte Humphreys*, 24 USPQ2d 1255 (Bd. Pat. App. & Int. 1992). On the other hand, if a deposit is not required to satisfy the requirements of 35 U.S.C. 112, it is permissible to make reference to such a deposit even though it may not be in a depository or made under the conditions which are acceptable under these regulations. As new depositories are recognized as suitable by the Commissioner, their identity will be announced in the *Official Gazette*.

An organization may be recognized as suitable by the Office if the procedure and conditions specified in 37 CFR 1.803(a)(2) and 37 CFR 1.803(b) are followed. Generally, it is not the intention of the Office to recognize as suitable any organization where the need for a suitable depository for patent purposes is being met by depositories recognized as IDAs under the Budapest Treaty. Suitability will be judged by the Commissioner, based on need and the information supplied by the organization seeking status, and information obtained from other sources that may be consulted.

While there is a desire to provide flexibility to a patent applicant in selecting an appropriate depository, these rules are not intended to permit each patent applicant to become its own depository since both the patent owner and the public have an interest in the continued availability and accessibility of the deposit

BINDING	binding site for any chemical group (co-enzyme, prosthetic group, etc.); the chemical nature of the group is given in the description field
SIGNAL	extent of a signal sequence (prepeptide)
TRANSIT	extent of a transit peptide (mitochondrial, chloroplastic, or for a microbody)
PROPEP	extent of a propeptide
CHAIN	extent of a polypeptide chain in the mature protein
PEPTIDE	extent of a released active peptide
DOMAIN	extent of a domain of interest on the sequence; the nature of that domain is given in the description field
CA_BIND	extent of a calcium-binding region
DNA_BIND	extent of a DNA-binding region
NP_BIND	extent of a nucleotide phosphate binding region; the nature of the nucleotide phosphate is indicated in the description field
TRANSMEM	extent of a transmembrane region
ZN_FING	extent of a zinc finger region
SIMILAR	extent of a similarity with another protein sequence; precise information, relative to that sequence is given in the description field
REPEAT	extent of an internal sequence repetition
HELIX	secondary structure: Helices, for example, Alpha-helix, 3(10) helix, or Pi-helix
STRAND	secondary structure: Beta-strand, for example, Hydrogen bonded beta-strand, or Residue in an isolated beta-bridge
TURN	secondary structure: Turns, for example, H-bonded turn (3-turn, 4-turn, or 5-turn)
ACT_SITE	amino acid(s) involved in the activity of an enzyme
SITE	any other interesting site on the sequence
INIT_MET	the sequence is known to start with an initiator methionine

available in the sense that those having possession of it would make it available upon request, but no one has been informed of its existence.

The Board of Patent Appeals and Interferences has held that a description of the precise geographic location of marine tunicates, as a biological material, used in a claimed invention was adequate to satisfy the enablement requirement of 35 U.S.C. 112. *Ex Parte Rinehart*, 10 USPQ2d 1719 (Bd. Pat. App. & Int. 1985). The term "readily" used in the phrase "known and readily available" is considered appropriate to define that degree of availability which would be reasonable under the circumstances. If the biological material and its natural location can be adequately described so that one skilled in the art could obtain it using ordinary skill in the art, the disclosure would appear to be sufficient to meet the enablement requirement of 35 U.S.C. 112 without a deposit so long as its degree of availability is reasonable under the circumstances.

By showing that a biological material is known and readily available or by making a deposit in accordance with these rules, applicant does not guarantee that such biological material will be available forever. Public access during the term of the patent may affect the enforceability of the patent. Although there is a public interest in the availability of a deposited biological material during and after the period of enforceability of the patent, there should not be any undue concern about continued access to the public. See 37 CFR 1.806 (the term of deposit is "at least thirty (30) years and at least five (5) years after the most recent request" for a sample; the agreement sufficiently ensures that the deposit will be "available beyond the enforceable life of the patent"). Unless there is a reasonable basis to believe that the biological material will cease to be available during the enforceable life of the patent, current availability would satisfy the requirement. The incentives provided by the patent system should not be constrained by the mere possibility that a disclosure that was once enabling would become non-enabling over a period of time through no fault of the patentee. *In re Metcalfe*, 410 F.2d 1378, 161 USPQ 789 (CCPA 1969).

If an applicant has adequately established that a biological material is known and readily available, the Office will accept that showing. In those instances, however, the applicant takes the risk that the material may cease to be known and readily available. Such a defect cannot be cured by reissue after the grant of a patent.

On the other hand, *Ex parte Humphreys*, 24 USPQ2d 1255 (Bd. Pat. App. & Int. 1992), held that the only manner in which applicants could satisfy their burden of assuring public access to the needed biological material, and, thereby, compliance with the enablement requirement of 35 U.S.C. 112, was by making an appropriate deposit. The fact that applicants and other members of the public were able to obtain the material in question from a given depository prior to and after the filing date of the application in issue did not establish that upon issuance of a patent on the application that such material would continue to be accessible to the public. The applicants did not make of record any of the facts and circumstances surrounding their access to the material in issue from the depository, nor was there any evidence as to the depository's policy regarding the material if a patent would have been granted. Further, there was no assurance that the depository would have allowed unlimited access to the material if the application had matured into a patent.

There are many factors that may be used as indicia that a biological material is known and readily available to the public. Relevant factors include commercial availability, references to the biological material in printed publications, declarations of accessibility by those working in the field, evidence of predictable isolation techniques, or an existing deposit made in accordance with these rules. Each factor alone may or may not be sufficient to demonstrate that the biological material is known and readily available. Those applicants that rely on evidence of accessibility other than a deposit take the risk that the patent may no longer be enforceable if the biological material necessary to satisfy the requirements of 35 U.S.C. 112 ceases to be accessible.

The Office will accept commercial availability as evidence that a biological material is known and readily available only when the evidence is clear and convincing that the public has access to the material. See the final rule entitled "Deposit of Biological Materials for Patent Purposes," 54 FR 34864, 34875 (August 22, 1989). A product could be commercially available but only at a price that effectively eliminates accessibility to those desiring to obtain a sample. The

The limit of four or more amino acids was established for consistency with limits in place for industry database collections whereas the limit of ten or more nucleotides, while lower than certain industry database limits, was established to encompass those nucleotide sequences to which the smallest probe will bind in a stable manner. The limits for amino acids and nucleotides are also consistent with those established for sequence data exchange with the Japanese Patent Office and the European Patent Office.

37 CFR 1.821(a)(1) and 37 CFR 1.821(a)(2) present further definitions for those nucleotide and amino acid sequences that are intended to be embraced by the sequence rules. Situations in which the applicability of the rules are in issue will be resolved on a case-by-case basis.

Nucleotide sequences are further limited to those that can be represented by the symbols set forth in 37 CFR 1.822(b), which incorporates by reference WIPO Standard ST.25 (1998), Appendix 2, Table 1 (see MPEP § 2422). The presence of other than typical 5' to 3' phosphodiester linkages in a nucleotide sequence does not render the rules inapplicable. The Office does not want to exclude linkages of the type commonly found in naturally occurring nucleotides, e.g., eukaryotic end capped sequences.

Amino acid sequences are further limited to those listed in 37 CFR 1.822(b), which incorporates by reference WIPO Standard ST.25 (1998), Appendix 2, Table 3 (see MPEP § 2422), and those L-amino acids that are commonly found in naturally occurring proteins. The limitation to L-amino acids is based upon the fact that there currently exists no widely accepted standard nomenclature for representing the scope of amino acids encompassed by non-L-amino acids, and, as such, the process of meaningfully encoding these other amino acids for computerized searching and printing is not currently feasible. The presence of one or more D-amino acids in a sequence will exclude that sequence from the scope of the rules. (Voluntary compliance is, however, encouraged in these situations; the symbol "Xaa" can be used to represent D-amino acids.) The sequence rules embrace "[a]ny peptide or protein that can be expressed as a sequence using the symbols in WIPO Standard ST.25 (1998), Appendix 2, Table 3 in conjunction with a description in the Feature section to describe, for example, modified linkages, cross links and end caps, non-peptidyl bonds, etc." 37 CFR 1.821(a)(2).

With regard to amino acid sequences, the use of the terms "peptide or protein" implies, however, that the amino acids in a given sequence are linked by at least three consecutive peptide bonds. Accordingly, an amino acid sequence is not excluded from the scope of the rules merely due to the presence of a single non-peptidyl bond. If an amino acid sequence can be represented by a string of amino acid abbreviations, with reference, where necessary, to a features table to explain modifications in the sequence, the sequence comes within the scope of the rules. However, the rules are not intended to encompass the subject matter that is generally referred to as synthetic resins.

2422.02 The Requirement for Exclusive Conformance; Sequences Presented in Drawing Figures

37 CFR 1.821(b) requires exclusive conformance, with regard to the manner in which the nucleotide and/or amino acid sequences are presented and described, with the sequence rules for all applications that include nucleotide and amino acid sequences that fall within the definitions. This requirement is necessary to minimize any confusion that could result if more than one format for representing sequence data was employed in a given application. It is also expected that the required standard format will be more readily and widely accepted and adopted if its use is exclusive, as well as mandatory.

In view of the fact that many significant sequence characteristics may only be demonstrated by a figure, the exclusive conformance requirement of this section may be relaxed for drawing figures. This is especially true in view of the fact that the representation of double stranded nucleotides is not permitted in the "Sequence Listing" and many significant nucleotide features, such as "sticky ends" and the like, will only be shown effectively by reference to a drawing figure. Further, the similarity or homology between/among sequences can only be depicted in an effective manner in a drawing figure. Similarly, drawing figures are recommended for use with amino acid sequences to depict structural features of the corresponding protein, such as finger regions and Kringle regions. The situations discussed herein are given by way of example only and there may be many other reasons for

The rules are effective for all applications filed on or after January 1, 1990, and for all reexamination proceedings in which the request for reexamination was filed on or after January 1, 1990, except that deposits made prior to the effective date which were acceptable under the then current practice will be acceptable in such applications and proceedings. Since most of the provisions of the rules reflect policy and practice existing prior to January 1, 1990, little change in practice or burden on applicants for patent and patent owners relying on the deposit of biological material has occurred. Applicants and patent owners are encouraged to comply with these rules even if their applications and reexamination proceedings were filed prior to January 1, 1990.

2403 Deposit of Biological Material

37 CFR 1.801. Biological material.

For the purposes of these regulations pertaining to the deposit of biological material for purposes of patents for inventions under 35 U.S.C. 101, the term biological material shall include material that is capable of self-replication either directly or indirectly. Representative examples include bacteria, fungi including yeast, algae, protozoa, eukaryotic cells, cell lines, hybridomas, plasmids, viruses, plant tissue cells, lichens and seeds. Viruses, vectors, cell organelles and other non-living material existing in and reproducible from a living cell may be deposited by deposit of the host cell capable of reproducing the non-living material.

37 CFR 1.801 indicates that the rules pertaining to deposits for purposes of patents for inventions under 35 U.S.C. 101 are intended to relate to biological material. For the purposes of these rules, the term "biological material" is defined in terms of a non-exhaustive list of representative materials which can be deposited in accordance with the procedures defined in these rules. These rules are intended to address procedural matters in the deposit of biological material for patent purposes. They are not designed to decide substantive issues such as whether a deposit of a particular organism or material would be recognized or necessary for the purposes of satisfying the statutory requirements for patentability under 35 U.S.C. 112. Although the issue of the need to make a deposit of biological material typically arises under the enablement requirement of the first paragraph of 35 U.S.C. 112, the issue could also arise under the description requirement (35 U.S.C. 112, first paragraph), best mode requirement (35 U.S.C. 112, first paragraph) or the requirements of the second paragraph of 35 U.S.C. 112 with respect to the claims.

37 CFR 1.801 does not attempt to identify what biological material either needs to be or may be deposited to comply with the requirements of 35 U.S.C. 112. For the most part, this issue must be addressed on a case-by-case basis. Thus, while the Office does not currently contemplate that there would be any situations where a material that is not capable of self-replication either directly or indirectly would be acceptable as a deposit, an applicant is clearly not precluded by these rules from attempting to show in any given application why the deposit of such a material should be acceptable to satisfy the requirements of 35 U.S.C. 112.

2403.01 Material Capable of Self-Replication

Biological material includes material that is capable of self-replication either directly or indirectly. Direct self-replication includes those situations where the biological material reproduces by itself. Representative examples of materials capable of self-replication are defined in the rule. Indirect self-replication is meant to include those situations where the biological material is only capable of replication when another self-replicating biological material is present. Self-replication after insertion in a host is one example of indirect self-replication. Examples of indirect replicating biological materials include viruses, phages, plasmids, symbionts, and replication defective cells. The list of representative examples of each type of replicating material includes viruses to demonstrate that the two lists in the rule are not intended to be mutually exclusive.

2403.02 Plant Material

Although plant material is included within the scope of the definition of biological material for purposes of patents for plant inventions under 35 U.S.C. 101, the rules on deposits are not applicable to applications filed under the Plant Patent Act (35 U.S.C. 161-164). The Office is of the view that a deposit is not required under the present provisions of 35 U.S.C. 162. Thus, a deposit is not necessary for the grant of a plant patent under the provisions of 35 U.S.C. 161-164. As with other biological material deposited for

applicant considers the sequence to be prior art. In general, any sequence that is disclosed and/or claimed as a sequence, i.e., as a string of particular bases or amino acids, and that otherwise meets the criteria of 37 CFR 1.821(a), must be set forth in the "Sequence Listing."

It is generally acceptable to present a single, general sequence in accordance with the sequence rules and to discuss and/or claim variants of that general sequence without presenting each variant as a separate sequence in the "Sequence Listing." By way of example only, the following types of sequence disclosures would be treated as noted herein by the Office. With respect to "conservatively modified variants thereof" of a sequence, the sequences may be described as SEQ ID NO:X and "conservatively modified variants thereof," if desired. With respect to a sequence that "may be deleted at the C-terminus by 1, 2, 3, 4, or 5 residues," all of the implied variations do not need to be included in the "Sequence Listing." If such a situation were encompassed by the rules, it would introduce far too much complexity into the "Sequence Listing" and the Office's database. The possible mathematical variations that could result from this type of language could reasonably require a "Sequence Listing" that would be thousands of pages in length. In this latter example, only the undeleted sequence needs to be included in the "Sequence Listing," and the sequences may be described as SEQ ID NO:X from which deletions have been made at the C-terminus by 1, 2, 3, 4, or 5 residues. The Office's database will only contain the undeleted sequence.

37 CFR 1.821(d) requires the use of the assigned sequence identifier in all instances where the description or claims of a patent application discuss sequences regardless of whether a given sequence is also embedded in the text of the description or claims of an application. This requirement is also intended to permit references, in both the description and claims, to sequences set forth in the "Sequence Listing" by the use of assigned sequence identifiers without repeating the sequence in the text of the description or claims. Sequence identifiers can also be used to discuss and/or claim parts or fragments of a properly presented sequence. For example, language such as "residues 14 to 243 of SEQ ID NO:23" is permissible and the fragment need not be separately presented in the "Sequence Listing." Where a sequence is embedded in the text of an application, it must be presented in a manner that complies with the requirements of the sequence rules.

The rules do not alter, in any way, the requirements of 35 U.S.C. 112. The implementation of the rules has had no effect on disclosure and/or claiming requirements. The rules, in general, or the use of sequence identifiers throughout the specification and claims, specifically, should not raise any issues under 35 U.S.C. 112, first or second paragraphs. The use of sequence identification numbers (SEQ ID NO:X) only provides a shorthand way for applicants to discuss and claim their inventions. These identification numbers do not in any way restrict the manner in which an invention can be claimed.

2422.04 The Requirement for a Computer Readable Copy of the Official Copy of the Sequence Listing

37 CFR 1.821(e) requires the submission of a copy of the "Sequence Listing" in computer readable form. The information on the computer readable form will be entered into the Office's database for searching and printing nucleotide and amino acid sequences. This electronic database will also enable the Office to exchange patented sequence data, in electronic form, with the Japanese Patent Office and the European Patent Office. It should be noted that the Office's database complies with the confidentiality requirement imposed by 35 U.S.C. 122. Pending application sequences are maintained in the database separately from published or patented sequences. That is, the Office will not exchange or make public any information on any sequence until the patent application containing that information is published or matures into a patent, or as otherwise allowed by 35 U.S.C. 122.

The "Sequence Listing" submitted pursuant to 37 CFR 1.821(c), whether on paper or compact disc, is the official copy of the "Sequence Listing." However, the Office may permit correction of the official copy, at the least, during the pendency of a given application by reference to the computer readable copy thereof submitted pursuant to 37 CFR 1.821(e) if both the official copy and computer readable form were submitted at the time of filing of the application and the totality of the circumstances otherwise

Chapter 2400 Biotechnology

2401 Introduction
2402 The Deposit Rules
2403 Deposit of Biological Material
2403.01 Material Capable of Self-Replication
2403.02 Plant Material
2404 Need or Opportunity to Make a Deposit
2404.01 Biological Material That Is Known and Readily Available to the Public
2404.02 Biological Material That Can Be Made or Isolated Without Undue Experimentation
2404.03 Reference to a Deposit in the Specification
2405 Acceptable Depository
2406 Time of Making an Original Deposit
2406.01 Description in Application Specification
2406.02 Deposit After Filing Date - Corroboration
2406.03 Possible Loss of U.S. Filing Date in Other Countries
2407 Replacement or Supplement of Deposit
2407.01 In a Pending Application
2407.02 After a Patent Has Issued
2407.03 Failure to Replace
2407.04 Treatment of Replacement
2407.05 Exemption From Replacement
2407.06 Replacement May Not Be Recognized
2408 Term of Deposit
2409 Viability of Deposit
2410 Furnishing of Samples
2410.01 Conditions of Deposit
2410.02 Certification of Statement of Availability of Deposit
2411 Examination Procedures
2411.01 Rejections Based on Deposit Issue
2411.02 Replies to Rejections Based on Deposit Issue
2411.03 Application in Condition for Allowance Except for Deposit
2411.04 After a Patent Has Been Granted
2411.05 Content of Application with Respect to Deposited Material
2420 The Requirements for Patent Applications Containing Nucleotide Sequence and/or Amino Acid Sequence Disclosures - the Sequence Rules
2421 Overview of the Sequence Rules
2421.01 Applications Affected
2421.02 Summary of the Requirements of the Sequence Rules
2421.03 Notification of a Failure to Comply
2421.04 Future Changes to the Sequence Rules
2422 Nucleotide and/or Amino Acid Sequence Disclosures in Patent Applications
2422.01 Definitions of Nucleotide and/or Amino Acids for Purpose of Sequence Rules
2422.02 The Requirement for Exclusive Conformance; Sequences Presented in Drawing Figures
2422.03 The Requirements for a Sequence Listing and Sequence Identifiers; Sequences Embedded in Application Text; Variants of a Presented Sequence
2422.04 The Requirement for a Computer Readable Copy of the Official Copy of the Sequence Listing
2422.05 Reference to Previously Filed Identical Computer Readable Form; Continuing or Derivative Applications; Request for Transfer of Computer Readable Form
2422.06 Requirement for Statement Regarding Content of Official and Computer Readable Copies of Sequence Listing
2422.07 Requirements for Compliance, Statements Regarding New Matter, and Sanctions for Failure to Comply
2422.08 Presumptions Regarding Compliance
2422.09 Box Sequence; Hand Delivery of Sequence Listings and Computer Readable Forms
2423 Symbols and Format To Be Used for Nucleotide and/or Amino Acid Sequence Data
2423.01 Format and Symbols To Be Used in Sequence Listings
2423.02 Depiction of Coding Regions
2423.03 Presentation and Enumeration of Sequences
2424 Requirements for Nucleotide and/or Amino Acid Sequences as Part of the Application Papers
2424.01 Informational Requirements for the Sequence Listing
2424.02 Sequence Listing Numeric Identifiers
2424.03 Additional Miscellaneous Requirements
2425 Form and Format for Nucleotide and/or Amino Acid Sequence Submissions in Computer Readable Form
2426 Amendments to or Replacement of Sequence Listing and Computer Readable Copy Thereof
2427 Form Paragraphs and Notice to Comply
2427.01 Form Paragraphs
2427.02 Notice To Comply
2428 Sample Statements
2429 Helpful Hints for Compliance
2430 PatentIn Information; Utilities Programs;

§ 2428 for further information and Sample Statements.

2422.07 Requirements for Compliance, Statements Regarding New Matter, and Sanctions for Failure to Comply

37 CFR 1.821(g) requires compliance with the requirements of 37 CFR 1.821(b) through (f), as discussed above, if they are not satisfied at the time of filing under 35 U.S.C. 111(a) or at the time of entering the national stage of an international application under 35 U.S.C. 371, within the period of time set in a notice requiring compliance. Failure to comply will result in the abandonment of the application. Submissions in reply to requirements under this paragraph must be accompanied by a statement that the submission includes no new matter. Such a statement may be made by the applicant. Extensions of time in which to reply to a requirement under this paragraph are available pursuant to 37 CFR 1.136. When an action by the applicant is a *bona fide* attempt to comply with these rules and it is apparent that compliance with some requirement has inadvertently been omitted, the applicant may be given a new time period to correct the omission. See 37 CFR 1.135(c).

Provisional applications filed under 35 U.S.C. 111(b) need not comply with 37 CFR 1.821 through 1.825, however, applicants are encouraged to file a Sequence Listing as defined in 37 CFR 1.821(c) for ease of identification of the sequence information contained in the provisional application.

37 CFR 1.821(h) requires compliance with the requirements of 37 CFR 1.821(b) through (f), as discussed above, within the time period prescribed in a notice requiring compliance in an international application filed in the United States Receiving Office under the Patent Cooperation Treaty (PCT), if the above noted requirements are not satisfied at the time of filing. Submissions in reply to requirements under this paragraph must be accompanied by a statement that the submission does not include matter which goes beyond the disclosure in the international application as filed. Such a statement may be made by an applicant. International applications that fail to comply with any of the requirements of 37 CFR 1.821(b)-(f) will be searched to the extent possible without the benefit of the information in computer readable form. See PCT Administrative Instructions Section 513(c).

The requirement to submit a statement that a submission in reply to the requirements of this section does not include new matter or matter which goes beyond the disclosure in the application as filed is not the first instance in which the applicant has been required to ensure that there is not new matter upon amendment. The requirement is analogous to that found in 37 CFR 1.125 regarding substitute specifications. When a substitute specification is required because the number or nature of amendments would make it difficult to examine the application, the applicant must include a statement that the substitute specification includes no new matter. The necessity of requiring a substitute "Sequence Listing," or pages thereof, is similar to the necessity of requiring a substitute specification and, likewise, the burden is on the applicant to ensure that no new matter is added. Applicants have a duty to comply with the statutory prohibition (35 U.S.C. 132 and 35 U.S.C. 251) against the introduction of new matter.

It should be noted that the treatment accorded errors in sequencing or any other errors prior to the implementation date of the sequence rules will be no different for those applications filed on or after the implementation date of these rules. The correction of errors in sequencing or any other errors that are made in describing an invention are, as they have always been, subject to the statutory prohibition (35 U.S.C. 132 and 35 U.S.C. 251) against the introduction of new matter.

2422.08 Presumptions Regarding Compliance

Neither the presence nor absence of information which is not required under the sequence rules will create a presumption that such information is necessary to satisfy any of the requirements of 35 U.S.C. 112. Further, the grant of a patent on an application that is subject to 37 CFR 1.821 through 37 CFR 1.825 constitutes a presumption that the granted patent complies with the requirements of these rules.

interference before entering any amendments in any of the cases involved in the interference.

If the amendment is filed in reply to a letter by the primary examiner, suggesting a claim or claims for interference with another party and for the purpose of declaring an additional interference, the examiner, after obtaining the consent of the administrative patent judge, enters the amendment and takes the proper steps to propose the second interference.

If the amendment is one filed in an application where the administrative patent judge has consented to *ex parte* prosecution of an appeal to the Board of Patent Appeals and Interferences being conducted concurrently with the interference proceeding (see MPEP § 2315) and if it relates to the appeal, it should be treated like any similar amendment in an ordinary appealed application.

When an amendment filed during interference purports to put the application in condition for another interference either with a pending application or with a patent, the primary examiner must personally consider the amendment sufficiently to determine whether, in fact, it does so, and should then consult with the administrative patent judge. With the consent of the administrative patent judge, one of the following three actions may be appropriate.

(A) If the amendment presents allowable claims directed to an invention claimed in a patent or in another pending application in issue or ready for issue, the examiner borrows the file, enters the amendment, and takes the proper steps to propose the second interference.

(B) Where in the opinion of the examiner, the proposed amendment does not put the application in condition for interference with another application not involved in the interference, the amendment is placed in the file and marked "not entered" and the applicant is informed why it will not be now entered and acted upon.

(C) When the amendment seeks to provoke an interference with a patent not involved in the interference and the examiner believes that the claims presented are not patentable to the applicant, and where the application is open to further *ex parte* prosecution, the file should be obtained, the amendment entered, and the claims rejected, setting a time period for reply. If reconsideration is requested and rejection made final, a time period for appeal should be set. Where the application at the time of forming the interference was closed to further *ex parte* prosecution and the disclosure of the application will *prima facie* not support the claim presented, or where the claims presented are drawn to a nonelected invention, the amendment will not be entered and the applicant will be so informed. That communication will give briefly the reason for the nonentry of the amendment.

2365 Second Interference

37 CFR 1.665. Second interference.

A second interference between the same parties will not be declared upon an application not involved in an earlier interference for an invention defined by a count of the earlier interference. See § 1.658(c).

acid sequences that is set forth in this section remains applicable for amino acid sequences that are circular in configuration, with the exception that the designation of the first amino acid of the sequence may be made at the option of the applicant.

(5) An amino acid sequence that contains internal terminator symbols (*e.g.*, "Ter", "*", or ".", etc.) may not be represented as a single amino acid sequence, but shall be presented as separate amino acid sequences.

(e) A sequence with a gap or gaps shall be presented as a plurality of separate sequences, with separate sequence identifiers, with the number of separate sequences being equal in number to the number of continuous strings of sequence data. A sequence that is made up of one or more noncontiguous segments of a larger sequence or segments from different sequences shall be presented as a separate sequence.

Tables 1-6 of WIPO Standard ST.25 (1998), Appendix 2, are reproduced in MPEP § 2422.

2423.01 Format and Symbols To Be Used in Sequence Listings

37 CFR 1.822 sets forth the format and symbols to be used for listing nucleotide and/or amino acid sequence data. The codes for representing the nucleotide and/or amino acid characters in the sequences are set forth in the tables of WIPO Standard ST.25 (1998), Appendix 2, Tables 1 and 3. See MPEP § 2422. No other symbols shall be used in nucleotide and amino acid sequences. The "modified base" and "modified and unusual amino acid" codes appearing in WIPO Standard ST.25 (1998), Appendix 2, Tables 2 and 4 (see 37 CFR 1.822 and MPEP § 2422) are not to be set forth in the sequences recited in the Sequence Listing. However, "modified base" or "modified and unusual amino acid" codes may be used in the written description and/or drawing portions of the specification. To properly enter notations for modified codes in the Sequence Listing, the Feature section of the Sequence Listing should be used. That is, a modified base or amino acid may be presented in a given sequence as the corresponding unmodified base or amino acid if the modified base or amino acid is one of those listed in WIPO Standard ST.25 (1998), Appendix 2, Table 2 or 4 and the modification is also set forth in the Feature section of the Sequence Listing. Otherwise, all bases or amino acids not appearing in WIPO Standard ST.25 (1998), Appendix 2, Table 1 or 3 must be listed in a given sequence as "n" or "Xaa," respectively, with further information given in the Feature section of the "Sequence Listing." See 37 CFR 1.823(b).

In 37 CFR 1.822(b) and 37 CFR 1.822(d), the use of three-letter codes for amino acids is required. The use of the three-letter codes for amino acids is preferred over the one-letter codes from the perspective of facilitating the examiner's review of the application papers, including the "Sequence Listing", and the public's, as well as the examiner's, use of the printed patents. The three-letter codes must be presented using the upper case for the first character and lower case for the remaining two characters.

37 CFR 1.822(c) through (e) set forth the format for presenting sequence data. These paragraphs set forth the manner in which the characters in sequences are to be grouped, spaced, presented and numbered.

2423.02 Depiction of Coding Regions

If applicant chooses to depict coding regions, 37 CFR 1.822 (c)(3) requires the amino acids corresponding to the codons in the coding parts of a nucleotide sequence to be typed immediately below the corresponding codons. Further, in 37 CFR 1.822 (c)(3), the situation in which a codon spans an intron has been addressed. In those situations, the "amino acid symbol shall be typed below the portion of the codon containing two nucleotides." This requirement clarifies the representation of an amino acid that corresponds to a codon that spans an intron.

It should be noted that the sequence rules do not, in any way, require the depiction of coding regions or the amino acids corresponding to the codons in those coding regions. 37 CFR 1.822 (d) only requires that where amino acids corresponding to the codons in the coding parts of a nucleotide sequence are depicted, they must be depicted below the corresponding codons. There is absolutely no requirement in the rules to depict coding regions. Nor is there a requirement to separately list the amino acids corresponding to the codons in the coding parts of a nucleotide sequence unless the applicant desires to discuss the amino acids as a separate sequence. That is, when the coding parts of a nucleotide sequence and their corresponding amino acids have been identified, if applicant desires to discuss those amino acids in the coding parts of the nucleotide as a separate sequence, those amino acids must also be set forth as a separate sequence. The separate submission of the amino acid

AQ's claims corresponding to the sole count is awarded to applicant AQ. Applicant AS and the assignee would not be estopped, because applicant AQ was not a "losing party" (37 CFR 1.658(c)).

Example 8

Applicant AT discloses a generic invention to "solvent" and a species to "benzene." Application AT contains a patentable claim 1 (solvent) and no other claims. Applicant AU discloses the generic invention to "solvent" and species to "benzene" and "toluene." Application AU contains patentable claim 3 (solvent) and no other claims. An interference is declared with a single count (solvent). Claim 1 of application AT and claim 3 of application AU are designated to correspond to the count. No preliminary motions are filed. A judgment is entered in favor of applicant AT on the claim corresponding to the sole count. Applicant AU would be estopped to obtain a patent containing a claim to benzene, because applicant AU failed to file a preliminary motion under 37 CFR 1.633(c)(1) seeking to add a count to benzene and benzene was disclosed in winning party AT's application. Applicant AU would also be estopped to obtain a patent containing a claim to toluene, unless "toluene" defines a "separate patentable invention" from "solvent." A basis for interference estoppel (37 CFR 1.658(c)) exists if "toluene" and "solvent" define the "same patentable invention" because a claim to "toluene" could properly have been added and designated to correspond to the count. See 37 CFR 1.633(c)(2).

The following two examples illustrate the application of estoppel against an applicant who lost the interference based solely on the fact that the applicant was unable to establish a date of invention prior to the opponent's foreign filing date (see *Ex parte Tytgat*, 225 USPQ 907 (Bd. App. 1985)):

Example 9.

Application AV discloses engines in general and in particular a 6-cylinder engine. Application AV contains only claim 1 (engine). Application AW discloses engines in general, but does not specifically disclose a 6-cylinder engine. Application AW contains only a single claim 3 (engine). The U.S. "filing date" (37 CFR 1.601(h) of the AV application is prior to the U.S. filing date of the AW application, but the AW application claims a foreign priority date under 35 U.S.C. 119 based on an application filed in a foreign country prior to the filing date of the AV application. An interference is declared. The sole count of the interference is to "an engine." Claim 1 of the AV application and claim 3 of the AW application are designated to correspond to the count. During the interference, applicant AV does not move under 37 CFR 1.633(c)(2) to add a claim to a 6-cylinder engine and to designate the claim to correspond to the count. Applicant AW is awarded a judgment in the interference based on the earlier filing date of the foreign application. After the interference, applicant AV adds claim 2 (6-cylinder engine) to the AV application. Whether AV would be entitled to a patent containing a claim to a 6-cylinder engine will depend solely on whether a 6-cylinder engine is a "separate patentable invention" from "engine" - the subject matter of the count. If a 6-cylinder engine is a "separate patentable invention" within the meaning of 37 CFR 1.601(n), applicant AV could not have successfully moved under 37 CFR 1.633(c)(2) to add claim 2 and to designate it to correspond to the count. Therefore applicant AV could obtain a patent containing claim 2. If, on the other hand, a 6-cylinder engine is not a "separate patentable invention," claim 2 of the AV application would be rejected on the basis of interference estoppel because claim 2 could have been added by a motion under 37 CFR 1.633(c)(2). See 37 CFR 1.658(c).

Example 10.

This example is basically the same as Example 9, except that application AV initially contains claim 1 (engine) and claim 2 (6-cylinder engine). When the interference is declared, both claims 1 and 2 of application AV are designated to correspond to the count. During the interference, applicant AV does not move under 37 CFR 1.633(c)(4) to designate claim 2 as not corresponding to the count. A judgment in the interference is entered for applicant AW based on the earlier filing date of the foreign patent application. After the interference, applicant AV would not be able to obtain a patent containing claim 2, because the claim was designated to correspond to a count and entry of the judgment constitutes a final decision by the PTO

be set forth at the beginning of the "Sequence Listing." The following table illustrates the numeric identifiers.

Numeric Identifier	Definition	Comments and format	Mandatory (M) or Optional (O)
<110>	Applicant.....	Preferably max. of 10 names; one name per line; preferable format: Surname, Other Names and/or Initials.	M.
<120>	Title of Invention.....	.....	M.
<130>	File Reference.....	Personal file reference.....	M when filed prior to assignment or appl. number
<140>	Current Application Number.	Specify as: US 07/999,999 or PCT/US96/99999.	M, if available.
<141>	Current Filing Date.....	Specify as: yyyy-mm-dd.....	M, if available.
<150>	Prior Application Number.	Specify as: US 07/999,999 or PCT/US96/99999.	M, if applicable include priority documents under 35 U.S.C. 119 and 120
<151>	Prior Application Filing Date.	Specify as: yyyy-mm-dd	M, if applicable
<160>	Number of SEQ ID NOs.	Count includes total number of SEQ ID NOs.....	M.
<170>	Software.....	Name of software used to create the Sequence Listing.	O.
<210>	SEQ ID NO:#:.....	Response shall be an integer representing the SEQ ID NO shown.	M.
<211>	Length.....	Respond with an integer expressing the number of bases or amino acid residues.	M.

such claims "stand finally disposed of without further action by the examiner." See also 35 U.S.C. 135(a). When the files are returned to the TC after termination of the interference, a pencil line should be drawn through the claims as to which a judgment of priority adverse to an applicant has been rendered, and the notation "37 CFR 1.663" should be written in the margin to indicate the reason for the pencil line. If these claims have not been canceled by the applicant and the application is otherwise ready for issue, these notations should be replaced by a line in red ink and the notation "37 CFR 1.663" in red ink before passing the application to issue, and the applicant notified of the cancellation by an Examiner's Amendment. If an action is necessary in the application after the interference, the applicant should also be informed that "Claims (designated by numerals), as to which a judgment adverse to the applicant has been rendered, stand finally disposed of in accordance with 37 CFR 1.663."

If all the claims in the application are eliminated, a letter should be written informing the applicant that all the claims in the application have been disposed of, indicating the circumstances, that no claims remain subject to prosecution, and that the application will be sent to the abandoned files with the next group of abandoned applications. Proceedings are terminated as of the date the interference terminated. See MPEP § 2361.

If the losing party's application was under rejection at the time the interference was declared, such rejection is ordinarily repeated (either in full or by reference to the previous action) and, in addition, any other suitable rejections, as discussed below, are made. If the losing party's application was under final rejection or ready for issue, his or her right to reopen the prosecution is restricted to subject matter related to the issue of the interference.

Where the losing party failed to get a copy of the opponent's drawing or specification during the interference, the losing party may order a copy thereof to enable said party to respond to a rejection based on the successful party's disclosure. Such order is referred to the administrative patent judge who has authority to approve orders of this nature.

In addition to repeating any outstanding rejection, the examiner should consider whether any remaining claims in the losing party's application should be rejected on the ground of unpatentability under 35 U.S.C. 102/103, or on the ground of estoppel.

UNPATENTABILITY UNDER 35 U.S.C. 102/103

The examiner should determine from the Board's decision the basis on which judgment was rendered against the applicant. If the judgment was that applicant was not the first inventor of the subject matter in issue, the application claims may be rejected under 35 U.S.C. 102(g)/103 as unpatentable over the lost counts. If the judgment was based on a holding that applicant derived the invention from another, a rejection of claims as unpatentable over the lost counts under 35 U.S.C. 102(f)/103 may be in order. Where the Board rendered judgment against the applicant because his or her claims were unpatentable over prior art, under 35 U.S.C. 112, or on other grounds, the other claims in the application should be reviewed to determine whether any of those grounds may be applicable to them.

ESTOPPEL

Claims which cannot be rejected as unpatentable over the lost counts may still be subject to rejection on the ground of estoppel. As stated in 37 CFR 1.658(c), a losing party who could have properly moved under 37 CFR 1.633 or 1.634, but failed to do so, is estopped from taking subsequent action in the USPTO which is inconsistent with the party's failure to properly move. However, in the event of a "split award," the losing party is not estopped as to claims which corresponded, or properly could have corresponded, to a count which he or she won.

The following examples illustrate the application of estoppel to the losing party:

Example 1

Junior party applicant AL and senior party applicant AK both disclose separate patentable inventions "A" and "B" and claim only invention A in their respective applications. An interference is declared with a single count to invention A. Neither party files a motion under 37 CFR 1.633(c)(1) to add a count to invention B. Judgment as to all of AL's claims corresponding to the sole count is awarded to junior party applicant AL. Senior party applicant AK will be estopped to thereafter obtain a patent containing claims to invention B, because

Numeric Identifier	Definition	Comments and format	Mandatory (M) or Optional (O)
<300>	Publication Information	Leave blank after <300>	O.
<301>	Authors..... ...	Preferably max. of ten named authors of publication; specify one name per line; preferable format: Surname, Other Names and/or Initials.	O.
<302>	Title.....	....	O.
<303>	Journal.....	....	O.
<304>	Volume	....	O.
<305>	Issue	....	O.
<306>	Pages	....	O.
<307>	Date.....	Journal date on which data published; specify as yyyy- mm-dd, MMM-yyyy or Season- yyyy.	O.
<308>	Database Accession Number.	Accession number assigned by database including database name.	O.
<309>	Database Entry Date.....	Date of entry in database; specify as yyyy-mm-dd or MMM-yyyy.	O.
<310>	Patent Document Number.	Document number; for patent-type citations only. Specify as, for example, US 07/ 999,999.	O.
<311>	Patent Filing Date.....	Document filing date, for patent-type citations only; specify as yyyy-mm-dd.	O.
<312>	Publication Date.....	Document publication date, for patent-type citations only; specify as yyyy-mm-dd.	O.
<313>	Relevant Residues.....	FROM (position) TO (position).....	O.

not involved in the interference be rejected and that a patent be reexamined as to patent claims not involved in the interference.

When a patent is involved in an interference each claim of the patent will be designated to (A) correspond to a count or (B) not correspond to a count. All claims which are ultimately determined to correspond to a count will be involved in the judgment of the interference. Inasmuch as they are involved in the judgment of the interference, there is no need to recommend reexamination of those claims. The claims involved in the interference are either patentable or unpatentable based on the final decision of the Board.

2360 Reexamination, Reissue, Protest, or Litigation During Interference

37 CFR 1.660. Notice of reexamination, reissue, protest or litigation.

(a) When a request for reexamination of a patent involved in an interference is filed, the patent owner shall notify the Board within 10 days of receiving notice that the request was filed.

(b) When an application for reissue is filed by a patentee involved in an interference, the patentee shall notify the Board within 10 days of the day the application for reissue is filed.

(c) When a protest under § 1.291 is filed against an application involved in an interference, the applicant shall notify the Board within 10 days of receiving notice that the protest was filed.

(d) A party in an interference shall notify the Board promptly of any litigation related to any patent or application involved in an interference, including any civil action commenced under 35 U.S.C. 146.

(e) The notice required by this section is designed to assist the administrative patent judge and the Board in efficiently handling interference cases. Failure of a party to comply with the provisions of this section may result in sanctions under § 1.616. Knowledge by, or notice to, an employee of the Office other than an employee of the Board, of the existence of the reexamination, application for reissue, protest, or litigation shall not be sufficient. The notice contemplated by this section is notice addressed to the administrative patent judge in charge of the interference in which the application or patent is involved.

Under 37 CFR 1.660, a party is required to notify the Board when the party's patent or application becomes involved in other USPTO proceedings (reexamination, reissue, or protest) or litigation.

Before taking any action on the reexamination, reissue, or protest, the primary examiner should consult the administrative patent judge in charge of the interference. It is particularly important that a reissue application not be granted without the approval of the administrative patent judge. Also see MPEP § 2284 concerning requests for reexamination of a patent involved in an interference.

2361 Termination of Interference After Judgment

37 CFR 1.661. Termination of interference after judgment.

After a final decision is entered by the Board, an interference is considered terminated when no appeal (35 U.S.C. 141) or other review (35 U.S.C. 146) has been or can be taken or had.

37 CFR 1.661 sets forth when an interference is considered terminated after a judgment is entered in the interference. For the purpose of filing copies of settlement agreements under 35 U.S.C. 135(c), if an appeal or civil action is not filed, the interference is considered terminated as of the date the time for filing an appeal or civil action expired. 37 CFR 1.661; *Tallent v. Lamoine*, 204 USPQ 1058 (Comm'r Pat. 1979). See also *Nelson v. Bowler*, 212 USPQ 760 (Comm'r Pat. 1981). If an appeal is taken to the Court of Appeals for the Federal Circuit, the interference terminates on the date of receipt of the court's mandate by the U.S. Patent and Trademark Office. See MPEP § 1216.01. If a civil action is filed, and the decision of the district court is not appealed, the interference terminates on the date the time for filing an appeal from the court's decision expires. *Hunter v. Beissbarth*, 15 USPQ2d 1343 (Comm'r Pat. 1990).

2363 Action After Interference

37 CFR 1.664. Action after interference.

(a) After termination of an interference, the examiner will promptly take such action in any application previously involved in the interference as may be necessary. Unless entered by order of an administrative patent judge, amendments presented during the interference shall not be entered, but may be subsequently presented by the applicant subject to the provisions of this subpart provided prosecution of the application is not otherwise closed.

(b) After judgment, the application of any party may be held subject to further examination, including an interference with another application.

The files are returned to the Technology Center (TC) after termination of the interference. Jurisdiction of the examiner is automatically restored with the return of the files, and the cases of all parties are subject to such *ex parte* action as their respective conditions may require. The date when the interference terminates does not mark the beginning of a statutory

Numeric Identifier	Definition	Comments and format	Mandatory (M) or Optional (O)
<141>	Current Filing Date.....	Specify as: yyyy-mm-dd.....	M, if available.
<150>	Prior Application Number.	Specify as: US 07/999,999 or PCT/US96/99999.	M, if applicable include priority documents under 35 U.S.C. 119 and 120
<151>	Prior Application Filing Date.	Specify as: yyyy-mm-dd	M, if applicable
<160>	Number of SEQ ID NOs.	Count includes total number of SEQ ID NOs..... .	M.
<170>	Software.....	Name of software used to create the Sequence Listing.	O.
<210>	SEQ ID NO:#:.....	Response shall be an integer representing the SEQ ID NO shown.	M.
<211>	Length.....	Respond with an integer expressing the number of bases or amino acid residues.	M.
<212>	Type..... ...	Whether presented sequence molecule is DNA, RNA, or PRT (protein). If a nucleotide sequence contains both DNA and RNA fragments, the type shall be "DNA." In addition, the combined DNA/RNA molecule shall be further described in the <220> to <223> feature section.	M.
<213>	Organism.....	Scientific name, i.e. Genus/ species, Unknown or Artificial Sequence. In addition, the "Unknown" or "Artificial Sequence" organisms shall be further described in the <220> to <223> feature section.	M.

that the opponent wishes to have reviewed by the Board at a final hearing. Where only the opponent's response includes a request for a final hearing, the party filing the paper shall, within 14 days from the date of service of the opponent's response, file a reply identifying any other decision of the administrative patent judge that the party wishes to have reviewed by the Board at a final hearing.

(3) The paper or the response should be accompanied by a motion (§ 1.635) requesting a testimony period if either party wishes to introduce any evidence to be considered at final hearing (§ 1.671). Any evidence that a party wishes to have considered with respect to the decisions and deferred motions identified for consideration or review at final hearing shall be filed or, if appropriate, noticed under § 1.671(e) during the testimony period of the party. A request for a testimony period shall be construed as including a request for final hearing.

(4) If the paper contains an explanation of why judgment should not be entered in accordance with the order, and if no party has requested a final hearing, the decision that is the basis for the order shall be reviewed based on the contents of the paper and the response. If the paper fails to show good cause, the Board shall enter judgment against the party against whom the order issued.

Where appropriate, an administrative patent judge may consult with an examiner on a question which arises in the first instance in the interference. For example, a party may allege unpatentability over a reference not previously considered, or may attempt to add a count drawn to subject matter which was not previously examined.

The extent of the consultation will be determined by the administrative patent judge; the examiner may be consulted merely on one point of patentability, or may be asked to conduct a search of newly-presented counts or claims. The consultation may be informal, as by a telephone call, or may be by a more formal written memorandum to the examiner.

It should be noted that nothing in 37 CFR 1.640 authorizes conferences between administrative patent judges and examiners in *ex parte* appeals under 35 U.S.C. 134 from an adverse decision of an examiner.

2341 Unpatentability Discovered

37 CFR 1.641. Unpatentability discovered by administrative patent judge.

(a) During the pendency of an interference, if the administrative patent judge becomes aware of a reason why a claim designated to correspond to a count may not be patentable, the administrative patent judge may enter an order notifying the parties of the reason and set a time within which each party may present its views, including any argument and any supporting evidence, and, in the case of the party whose claim may be unpatentable, any appropriate preliminary motions under §§ 1.633(c), (d) and (h).

(b) If a party timely files a preliminary motion in response to the order of the administrative patent judge, any opponent may file an opposition (§ 1.638(a)). If an opponent files an opposition, the party may reply (§ 1.638(b)).

(c) After considering any timely filed views, including any timely filed preliminary motions under § 1.633, oppositions and replies, the administrative patent judge shall decide how the interference shall proceed.

If the examiner, while the interference is pending, discovers a reference or other reason which he or she believes would render one or more of the parties' claims corresponding to the count(s) unpatentable, the reference or other reason should be brought to the attention of the administrative patent judge in charge of the interference. The administrative patent judge will determine what action, if any, should be taken in the interference.

2342 Addition to Interference

37 CFR 1.642. Addition of application or patent to interference.

During the pendency of an interference, if the administrative patent judge becomes aware of an application or a patent not involved in the interference which claims the same patentable invention as a count in the interference, the administrative patent judge may add the application or patent to the interference on such terms as may be fair to all parties.

37 CFR 1.642 permits an administrative patent judge to add a newly discovered patent, as well as newly discovered applications, to an interference.

EXAMINER DISCOVERS ANOTHER APPLICATION OR PATENT DURING INTERFERENCE

If, during the pendency of an interference, the examiner discovers another application or patent claiming subject matter which is the same as, or not patentably distinct from, the invention defined in a count of the interference, the examiner should bring the application or patent to the attention of the administrative patent judge in charge of the interference. The administrative patent judge will determine what action, if any, should be taken in the interference.

If the application in question is for reissue of a patent involved in the interference, see MPEP § 2360.

Numeric Identifier	Definition	Comments and format	Mandatory (M) or Optional (O)
<306>	Pages	....	O.
<307>	Date.....	Journal date on which data published; specify as yyyy- mm-dd, MMM-yyyy or Season- yyyy.	O.
<308>	Database Accession Number.	Accession number assigned by database including database name.	O.
<309>	Database Entry Date.....	Date of entry in database; specify as yyyy-mm-dd or MMM-yyyy.	O.
<310>	Patent Document Number.	Document number; for patent-type citations only. Specify as, for example, US 07/ 999,999.	O.
<311>	Patent Filing Date.....	Document filing date, for patent-type citations only; specify as yyyy-mm-dd.	O.
<312>	Publication Date.....	Document publication date, for patent-type citations only; specify as yyyy-mm-dd.	O.
<313>	Relevant Residues.....	FROM (position) TO (position).....	O.
<400>	Sequence.....	SEQ ID NO should follow the numeric identifier and should appear on the line preceding the actual sequence.	M.

2424.03 Additional Miscellaneous Requirements

Throughout 37 CFR 1.823(b), the items of information relating to patent applications and patent publications should be provided keeping in mind the appropriate standards that have been established by the World Intellectual Property Organization (WIPO). In general, an application should be identified by a country code, a number and a filing date, while a published patent document should be identified by a country code, a number and kind code. Proper citation of priority patent applications is covered in MPEP § 201.14(d). For published patent documents, the country code, number and kind code will appear on the front page of the document. Unpublished PCT applications are identified by the letters PCT, the country code of the Receiving Office, the last two digits of the year of filing and a number, e.g., PCT/AT81/00033, PCT/FR88/00100. A published PCT application is identified by the letters WO, the last two digits of the year of publication, a number and a kind code, e.g., WO82/02827A, WO88/06811A. Country codes from WIPO Standard ST.3 Annex A and kind codes from WIPO Standard ST.16 are reproduced in MPEP § 1851. Questions on proper citation of patent documents should be directed to the Search and Information Resources Administration, International Liaison Staff.

(b) Ex parte prosecution as to specified matters may be continued concurrently with the interference with the consent of the administrative patent judge.

Under 37 CFR 1.615, upon declaration of an interference, *ex parte* prosecution of an application involved in the interference is suspended and any outstanding Office actions are considered as withdrawn by operation of the rule. *Ex parte Peterson*, 49 USPQ 119, 1941 C.D. 8 (Comm'r Pat. 1941). Upon termination of the interference, the examiner will reinstate the action treated as withdrawn by operation of 37 CFR 1.615 and set a shortened statutory period for reply.

The treatment of amendments filed during an interference is considered in detail in MPEP § 2364 - § 2364.01.

The approval of the administrative patent judge in charge of the interference must be obtained before undertaking any concurrent prosecution of the application.

2315.01 Suspension - Overlapping Applications

Where one of several applications of the same inventor or assignee which contain overlapping claims gets into an interference, the prosecution of all the cases not in the interference should be carried as far as possible, by treating as prior art the counts of the interference for the purpose of making provisional rejections and by insisting on proper lines of division or distinction between the applications. In some instances, suspension of action by the Office cannot be avoided. See MPEP § 709.01.

Where an application involved in an interference includes, in addition to the subject matter of the interference, a separate and divisible invention, prosecution of the second invention may be had during the pendency of the interference by filing a divisional application for the second invention or by filing a divisional application for the subject matter of the interference and moving to substitute the latter divisional application for the application originally involved in the interference. However, the application for the second invention may not be passed to issue if it contains claims broad enough to dominate matter claimed in the application involved in the interference.

¶ 23.17 Rejection Based on Count of an Interference

The rejection of claim **[1]** above based upon count **[2]** of Interference No. **[3]**, to which applicant is a party, is a provisional rejection for the purpose of resolving all remaining issues in this application. The provisional assumption that the count is prior art under 35 U.S.C. 102(g) against this application may or may not be true, and the prosecution in this case will be suspended pending final determination of priority in the interference if and when no other issues remain.

Examiner Note:

1. This paragraph must follow all rejections under 35 U.S.C. 102 or 103 using the count of the interference as prior art.
2. This paragraph is applicable only to an application which is commonly owned by a party in the interference but is not involved in the interference.

¶ 23.18 Suspension of Prosecution Pending Outcome of Interference

The outcome of Interference No. **[1]** has a material bearing on the patentability of the claims in this application. Prosecution in this application is SUSPENDED pending a final judgment in the interference.

Applicant should call this case up for action upon termination of the interference.

Examiner Note:

This paragraph should only be used in an application that is not in the interference but is commonly owned by one of the parties thereto.

2333 Preliminary Motions - Related to Application Not Involved in Interference

Whenever a party in interference brings a motion under 37 CFR 1.633(d) or (e) concerning an application not already included in the interference, the administrative patent judge will normally send the primary examiner a written notice of such motion and the primary examiner should place this notice in said application file.

The notice is customarily sent to the Technology Center (TC) which declared the interference, since the application referred to in the motion is generally examined in the same TC. However, if the application is not being examined in the same TC, then the correct TC should be ascertained and the notice forwarded to that TC.

This notice serves useful and essential purposes, and due attention must be given to it by the examiner when it is received. First, the examiner is cautioned by this notice not to consider *ex parte*, questions which are pending before the Office in *inter partes*

writing the properly formatted file to one of the acceptable electronic media. If a given sequence and its associated information cannot practically or possibly fit on the electronic media required in 37 CFR 1.824(c), an exception via a non-fee petition to waive this provision will normally be granted. As set forth in 37 CFR 1.824(d), the computer readable forms that are submitted in accordance with these rules will not be returned to the applicant. 37 CFR 1.824(a)(6) requires the labeling, with appropriate identifying information, of the computer readable forms that are submitted in accordance with these rules.

2426 Amendments to or Replacement of Sequence Listing and Computer Readable Copy Thereof

37 CFR 1.825. Amendments to or replacement of sequence listing and computer readable copy thereof.

(a) Any amendment to a paper copy of the "Sequence Listing" (§ 1.821(c)) must be made by the submission of substitute sheets and include a statement that the substitute sheets include no new matter. Any amendment to a compact disc copy of the "Sequence Listing" (§ 1.821(c)) must be made by the submission of a replacement compact disc (2 copies) in compliance with § 1.52(e). Amendments must also be accompanied by a statement that indicates support for the amendment in the application, as filed, and a statement that the replacement compact disc includes no new matter.

(b) Any amendment to the paper copy of the "Sequence Listing," in accordance with paragraph (a) of this section, must be accompanied by a substitute copy of the computer readable form (§ 1.821(e)) including all previously submitted data with the amendment incorporated therein, accompanied by a statement that the copy in computer readable form is the same as the substitute copy of the "Sequence Listing."

(c) Any appropriate amendments to the "Sequence Listing" in a patent; *e.g.*, by reason of reissue or certificate of correction, must comply with the requirements of paragraphs (a) and (b) of this section.

(d) If, upon receipt, the computer readable form is found to be damaged or unreadable, applicant must provide, within such time as set by the Commissioner, a substitute copy of the data in computer readable form accompanied by a statement that the substitute data is identical to that originally filed.

37 CFR 1.825 sets forth the procedures for amending the "Sequence Listing" and the computer readable copy thereof. The procedures that have been defined in 37 CFR 1.825 involve the submission of either substitute sheets or substitute compact discs of the "Sequence Listing" or substitute copies of the computer readable form, in conjunction with statements that indicate support for the amendment in the application, as filed, and that the substitute sheets or copies include no new matter. (See MPEP § 608.05 and § 2428 for further information.) An amendment to the material on a compact disc must be done by submitting a replacement compact disc with the amended file(s). The amendment should include a corresponding amendment to the description of the compact disc and the files contained thereon in the paper portion of the specification. ***A replacement compact disc containing the amended files also must contain all of the files of the original compact disc that were not amended.*** This will insure that the Office, printer, and public can quickly access all of the current files in an application or patent by referencing only the latest compact disc.The requirement for statements regarding the absence of new matter follows current practice relating to the submission of substitute specifications, as set forth in 37 CFR 1.125. 37 CFR 1.825 (c) addresses the situation where amendments to the "Sequence Listing" are made after a patent has been granted, e.g., by a certificate of correction, reissue or reexamination. 37 CFR 1.825 (d) addresses the possibility and presents a remedy for the situation where the computer readable form may be found by the Office to be damaged or unreadable.

2427 Form Paragraphs and Notice to Comply

2427.01 Form Paragraphs

See MPEP § 608.05 for form paragraphs which should be used when notifying applicant that a compact disc submitted in accordance with 37 CFR 1.52(e) (i.e., containing a computer program listing, Sequence Listing, and/or table) does not comply with all of the requirements of the 37 CFR 1.52(e). See also MPEP § 608.05(b) for form paragraphs which should be used when a table submitted on compact disc does not comply with 37 CFR 1.52(e).

In order to expedite the processing of applications, minor errors pertaining to compliance with the sequence rules may be handled with the first Office action. Examples of minor errors are: when the "Sequence Listing" under 37 CFR 1.821(c) is submitted on compact disc, missing statement in the transmittal letter stating that the two compact discs are identical, missing an incorporation-by-reference of

2309.03 Affidavits and Declarations Retained in File

When there are of record in the file of the application affidavits or declarations under 37 CFR 1.131 or 1.608, they should not be sealed but should be left in the file for consideration by the Board.

Affidavits and declarations under 37 CFR 1.131 and 1.608 are available for inspection by an opposing party to an interference after the preliminary motions under 37 CFR 1.633 are decided. See 37 CFR 1.612(b).

Affidavits or declarations in the file of a patent are not removed, inasmuch as they have been available to the public since the date the patent issued.

2309.06 Interfering Subject Matter in "Secrecy Order" Cases

37 CFR 5.3. Prosecution of application under secrecy order; withholding patent.

*****

(b) An interference will not be declared involving national applications under secrecy order. However, if an applicant whose application is under secrecy order seeks to provoke an interference with an issued patent, a notice of that fact will be placed in the file wrapper of the patent. (See § 1.607(d)).

*****

Since declaration of an interference gives immediate access to applications by opposing parties, no interference will be declared involving an application which has a secrecy order therein. See MPEP § 120 and § 130. Claims will be suggested, if necessary, so that all parties will be claiming the same patentable invention. See MPEP § 2303 - § 2305.04. When each application contains at least one claim to the same patentable invention, the following letter will be sent to all parties:

> Claims 1, 2, etc. (including the conflicting claims and claims not patentable over the application under secrecy order) conflict with those of another application. However, the secrecy order (of the other application/of your application) does not permit the declaration of an interference. Accordingly, action on the application is suspended for so long as this situation continues.
>
> Upon removal of the secrecy order and markings, if applicable, from all applications, an interference will be declared.

The letter should also indicate the allowability of the remaining claims, if any.

A notice that claims have been presented in an application under secrecy order for the purpose of interference with a patent should be placed in the patented file. Also, in accordance with 37 CFR 1.607(d), the patentee should be notified. See MPEP § 2307.06. The question of an interference is taken up upon termination of the secrecy order in the application in which patent claims are presented. The suggested notices should be modified accordingly.

The notices should be signed by the primary examiner. The copy of the notice retained separately in the TC should, in addition, contain the identification of the applications and patents involved and the interfering claims.

2311 Declaration of Interference

37 CFR 1.611. Declaration of interference.

(a) Notice of declaration of an interference will be sent to each party.

(b) When a notice of declaration is returned to the Patent and Trademark Office undelivered, or in any other circumstance where appropriate, an administrative patent judge may send a copy of the notice to a patentee named in a patent involved in an interference or the patentee's assignee of record in the Patent and Trademark Office or order publication of an appropriate notice in the *Official Gazette*.

(c) The notice of declaration shall specify:

(1) The name and residence of each party involved in the interference;

(2) The name and address of record of any attorney or agent of record in any application or patent involved in the interference;

(3) The name of any assignee of record in the Patent and Trademark Office;

(4) The identity of any application or patent involved in the interference;

(5) Where a party is accorded the benefit of the filing date of an earlier application, the identity of the earlier application;

(6) The count or counts and, if there is more than one count, the examiner's explanation why the counts define different patentable inventions;

(7) The claim or claims of any application or any patent which correspond to each count;

(8) The examiner's explanation as to why each claim designated as corresponding to a count is directed to the same patentable invention as the count and why each claim designated as not corresponding to any count is not directed to the same patentable invention as any count; and

(9) The order of the parties.

(d) The notice of declaration may also specify the time for:

(1) Filing a preliminary statement as provided in § 1.621(a);

1. Use this form paragraph **only for the initial communication to the applicant**. Use either form paragraph 24.03 or 24.04 for subsequent communications.

2. Conclude action with appropriate form paragraph(s) 7.100-7.102.

3. When mailing the Office action, attach the CRF Diskette Problem Report.

¶ 24.03 Compact Disc/CRF Submission Is Not Fully Responsive, Bona Fide Attempt

The reply filed **[1]** is not fully responsive to the Office communication mailed **[2]** for the reason(s) set forth below or on the attached Notice To Comply With The Sequence Rules or CRF Diskette Problem Report.

Since the above-mentioned reply appears to be *bona fide*, applicant is given a TIME PERIOD of **ONE (1) MONTH** or **THIRTY (30) DAYS** from the mailing date of this notice, whichever is longer, within which to supply the omission or correction in order to avoid abandonment. EXTENSIONS OF THIS TIME PERIOD MAY BE GRANTED UNDER 37 CFR 1.136(a).

Examiner Note:

1. This form paragraph may be used whether or not the six-month period for reply has expired. It is intended for use whenever a **bona fide** reply has been submitted. This practice does not apply where there has been a deliberate omission of some necessary part of a complete reply or where the reason the reply is incomplete cannot be characterized as an apparent oversight or apparent inadvertence. Under such cases the examiner has no authority to grant an extension if the six-month period for reply has expired. Use form paragraph 24.04 under such circumstances.

2. In bracket 1, insert the date of the reply and in bracket 2, insert the mail date of the communication requiring compliance.

3. When mailing the Office action, attach a Notice To Comply With Requirements For Patent Applications Containing Nucleotide Sequence And/Or Amino Acid Sequence Disclosures, if any, along with a marked-up copy of the Raw Sequence Listing, or CRF Diskette Problem Report.

4. See 37 CFR 1.135(c), 1.821(g); MPEP §§ 710.02(c), 711.02(a), 714.02 and 714.03.

¶ 24.04 Compact Disc/CRF Submission Is Not Fully Responsive

The communication filed **[1]** is not fully responsive to the communication mailed **[2]** for the reason(s) set forth below or on the attached Notice To Comply With The Sequence Rules or CRF Diskette Problem Report.

If a complete reply has not been submitted by the time the shortened statutory period set in the communication mailed **[3]** has expired, this application will become abandoned unless applicant corrects the deficiency and obtains an extension of time under 37 CFR 1.136(a). In no case may an applicant extend the period for reply beyond the SIX MONTH statutory period.

Examiner Note:

1. This form paragraph may not be used when the six month period for reply has expired. Use this form paragraph in the situation where, in the reply (within the six-months), there has been a deliberate omission of some necessary part of a complete reply. When the reply appears to be bona fide, but through an apparent oversight or inadvertence failed to provide a complete reply, use form paragraph 24.03.

2. In bracket 1, insert the date of the reply and in brackets 2 and 3, insert the mail date of the communication requiring compliance.

3. When mailing the Office action, attach a Notice To Comply With Requirements For Patent Applications Containing Nucleotide Sequence And/Or Amino Acid Sequence Disclosures, if any, along with a marked-up copy of the Raw Sequence Listing, or CRF Diskette Problem Report.

¶ 24.05 CD-ROM/CD-R Requirements (Missing Sequence Listing/CRF Statement)

This application is objected to because it does not include the statement "the sequence listing information recorded in computer readable form is identical to the written (on paper or compact disc) sequence listing" and, where applicable, a statement that the submission includes no new matter, as required by 37 CFR 1.821(e), 1.821(f), 1.821(g), 1.825(b) or 1.825(d). Correction is required.

Examiner Note:

Use this form paragraph when there is no statement in the transmittal letter stating that the sequence listing information recorded in the CRF is identical to the written sequence listing

¶ 24.05.01 CD-ROM/CD-R Requirements (Missing Sequence Listing/CRF Statement in an Amendment Filed with a CRF)

The amendment filed **[1]** is objected to because it does not include the statement "the sequence listing information recorded in computer readable form is identical to the written (on paper or compact disc) sequence listing" and, where applicable, a statement that the submission includes no new matter, as required by 37 CFR 1.821(e), 1.821(f), 1.821(g), 1.825(b) or 1.825(d). A statement that the sequence listing information is identical is required.

Examiner Note:

1. Use this form paragraph when there is no statement in the transmittal letter stating that the sequence listing information recorded in the CRF is identical to the written sequence listing.

2. In bracket 1, insert the date of the amendment.

A separate form is used for each count of the interference. The form need not be typed. If the count is identical to a claim of one of the parties, the number of that claim is circled. If the count is not identical to any claim of any of the parties, the count should be typed on a plain sheet and attached to the form.

The files to be included in the interference should be listed by last name (of the first listed inventor if application is joint), application number, filing date, and, if applicable, patent number and issue date.

The sequence in which the parties are listed on the form is completely immaterial. If the examiner has determined that a party is entitled to the benefit of the filing date of one or more applications (or patents) as to the counts, the blanks provided on the form for indicating this fact should be filled in as to all such applications. It is particularly important to list all intermediate applications necessary to provide continuity of pendency to the earliest benefit application to which a party is entitled.

An applicant may be accorded the benefit of a foreign application on the Form PTO-850 and the declaration notices only if the papers required by 37 CFR 1.55, including an English translation of the foreign application, have been filed and the primary examiner has determined that the applicant is in fact entitled to the benefit of such application. In addition, for utility or plant applications filed on or after November 29, 2000, the applicant must submit the priority claim within the time required by 37 CFR 1.55(a)(1) or file a grantable petition, including the surcharge set forth in 37 CFR 1.17(t), for an unintentionally delayed priority claim under 37 CFR 1.55(c). A patentee may be accorded the benefit of the filing date of a foreign application in the notice of interference provided he or she has complied with the requirements of 37 CFR 1.55, has filed an English translation, if required, and the primary examiner has determined that at least one species within the count involved in the interference is supported by the disclosure of the foreign application.

All claims in each party's application or patent must be listed in the spaces provided on the form as either corresponding or not corresponding to the count. A claim corresponds to a count if, considering the count as prior art, the claim would be unpatentable over the count under 35 U.S.C. 102 or 35 U.S.C. 103. If the examiner is in doubt as to whether a party's claim does or does not correspond to a count, it should be listed as corresponding to the count. If the party disagrees with this listing, a motion may be filed under 37 CFR 1.633(c)(4) during the interference to designate the claim as not corresponding to the count.

Note that for each count, every claim in a party's application or patent must be designated as either corresponding or not corresponding to the count; this includes any claims of the application which may be under rejection. For every claim of an application which is listed on the form, the examiner must indicate whether or not that claim is allowable by writing its number in either the "patented or patentable pending claims" box or the "unpatentable pending claims" box on the form. <u>All patent claims and at least one of the application claims designated as corresponding to the count must be listed in the "patented or patentable pending claims" box.</u>

If an involved application or patent contains multiple dependent claims, the examiner should be careful to indicate which embodiments of each multiple dependent claim correspond or do not correspond to each count. An embodiment of a multiple dependent claim should not be circled on form PTO-850 as being the count, but rather, the embodiment should be written out in independent form in the space provided.

After Form PTO-850 is filled out for each count of the proposed interference, it must be signed by the primary examiner and an Interference Practice Specialist in the space provided. The form must also be signed by the TC Director, if the TC Director's approval is required (as when the interference involves two applications whose effective filing dates are more than 6 months apart).

The examiner should keep a copy of the form or forms and all attachments for his/her records.

If two of the parties have the same attorney or agent, the examiner will in a separate memorandum call the attention of the Board to that fact when the Interference Initial Memorandum is forwarded. The administrative patent judge, when the interference is declared, can then take such action as may be appropriate under 37 CFR 1.613(b).

UNITED STATES DEPARTMENT OF COMMERCE
Patent and Trademark Office
Address: COMMISSIONER OF PATENTS AND TRADEMARKS
Washington, D.C. 20231

APPLICATION NUMBER	FILING/RECEIPT DATE	FIRST NAMED APPLICANT	ATTY. DOCKET NO./TITLE

DATE MAILED:

NOTICE TO COMPLY WITH REQUIREMENTS FOR PATENT APPLICATIONS CONTAINING NUCLEOTIDE SEQUENCE AND/OR AMINO ACID SEQUENCE DISCLOSURES

The nucleotide and/or amino acid sequence disclosure contained in this application does not comply with the requirements for such a disclosure as set forth in 37 CFR 1.821–1.825 for the following reason(s):

☐ 1. This application fails to comply with the requirements of 37 CFR 1.821–1.825.

☐ 2. This application does not contain, as a separate part of the disclosure on paper copy, a "Sequence Listing" as required by 37 CFR 1.821(c).

☐ 3. A copy of the "Sequence Listing" in computer readable form has not been submitted as required by 37 CFR 1.821(e).

☐ 4. A copy of the "Sequence Listing" in computer readable form has been submitted. The content of the computer readable form, however, does not comply with the requirements of 37 CFR 1.822 and/or 1.832, as indicated on the attached marked–up copy of the "Raw Sequence Listing."

☐ 5. The computer readable form that has been filed with this application has been found to be damaged and/or unreadable as indicated on the attached CRF Diskette Problem Report. A substitute computer readable form must be submitted as required by 37 CFR 1.825(d).

☐ 6. The paper copy of the "Sequence Listing" is not the same as the computer readable form of the "Sequence Listing" as required by 37 CFR 1.821(e).

☐ 7. OTHER:_____

APPLICANT MUST PROVIDE:

☐ An initial or substitute computer readable form (CRF) copy of the "Sequence Listing."
☐ An initial or substitute paper copy of the "Sequence Listing," as well as an amendment directing its entry into the specification.
☐ A statement that the content of the paper and computer readable copies are the same and, where applicable, include no new matter, as required by 37 CFR 1.821(e), 1.821(f), 1.821(g), 1.825(b) or 1.825(d).

FOR QUESTIONS REGARDING COMPLIANCE WITH THESE REQUIREMENTS, PLEASE CONTACT:

☐ For Rules Interpretation, call (703) 308–1123.
☐ For CRF submission help, call (703) 308–4212.
☐ For PatentIn software help, call (703) 308–6856.

Customer Service Center
Initial Patent Examination Division (703) 308–1202

FORM PTO–1661 (Rev. 7/97) **PART 1 – ATTORNEY/APPLICANT COPY**

dates the applicant's by more than 3 months, should have in mind the provisions of 37 CFR 1.617, and especially the following:

(A) After these affidavits or declarations are forwarded by the primary examiner for the declaration of an interference, they will be examined by an administrative patent judge.

(B) If the affidavits or declarations fail to establish that applicant would *prima facie* be entitled to a judgment relative to the patentee, an order will be issued concurrently with the notice of interference, requiring applicant to show cause why summary judgment should not be entered against the applicant.

(C) Additional evidence in response to such order will not be considered unless justified by a showing under the provisions of 37 CFR 1.617(b). If the applicant responds, the applicant must serve the patentee and any other opponents with a copy of the original showing under 37 CFR 1.608(b) and of the response, and they will be entitled to present their views with respect thereto (37 CFR 1.617(d)).

(D) All affidavits or declarations submitted must describe acts which the affiants performed or observed, or circumstances observed, such as structure used and results of use or test, except on a proper showing as provided in 37 CFR 1.608(b). Statements of conclusion, for example, that the invention of the counts was reduced to practice, are generally considered to be not acceptable. It should also be kept in mind that documentary exhibits which are not self-authenticated must be authenticated and discussed with particularity by an affiant having direct knowledge of the matters involved. However, it is not necessary that the exact date of conception or reduction to practice be revealed in the affidavits, declarations, or exhibits if the affidavits or declarations aver observation of the necessary acts and facts, including documentation when available, before the patentee's effective filing date. On the other hand, where reliance is placed upon diligence, the affidavits or declarations and documentation should be precise as to dates from a date just prior to patentee's effective filing date. The showing should relate to the essential factors in the determination of the question of priority of invention as set out in 35 U.S.C. 102(g).

(E) The explanation required by 37 CFR 1.608(b) should be in the nature of a brief or of explanatory remarks accompanying an amendment. The explanation should set forth the manner in which the requirements of the counts are satisfied and how the requirements for conception, reduction to practice, or diligence are met, or otherwise explain the basis on which the applicant is *prima facie* entitled to a judgment.

(F) Published decisions of the Court of Appeals for the Federal Circuit, Court of Customs and Patent Appeals and the Board of Patent Interferences concerning the quantum of proof required by an applicant to make out a *prima facie* showing entitling the applicant to an award of priority with respect to the filing date of a patent so as to allow the interference to proceed, 37 CFR 1.617(a), second sentence, include *Schendel v. Curtis*, 83 F.3d 1399, 38 USPQ2d 1743 (Fed. Cir. 1996); *Hahn v. Wong*, 892 F.2d 1028, 13 USPQ2d 1313 (Fed. Cir. 1989); *Wetmore v. Quick*, 536 F.2d 937, 190 USPQ 223 (CCPA 1976); *Golota v. Strom*, 489 F.2d 1287, 180 USPQ 396 (CCPA 1974); *Schwab v. Pittman*, 451 F.2d 637, 172 USPQ 69 (CCPA 1971); *Kistler v. Weber*, 412 F.2d 280, 162 USPQ 214 (CCPA 1969); *Azar v. Burns*, 188 USPQ 601 (Bd. Pat. Int. 1975); *Horvitz v. Pritchard*, 182 USPQ 505 (Bd. Pat. Int. 1974); and *Murphy v. Eiseman*, 166 USPQ 149 (Bd. Pat. Int. 1970).

As noted above, the evaluation of a showing under 37 CFR 1.608(b) is made by an administrative patent judge. However, when a showing under 37 CFR 1.608(b) is filed, the examiner must inspect it to determine whether the applicant is relying upon prior invention or unpatentability as a basis for the showing. If the applicant alleges prior invention, the examiner should merely determine that (A) at least one date prior to the effective filing date of the patent is alleged and (B) the showing contains at least one affidavit or declaration by a corroborating witness, i.e., by someone other than a named inventor. If these conditions are met the examiner should proceed to propose the interference as described in MPEP § 2309. If the showing is based on alleged unpatentability of the patent claim or claims, the examiner should determine whether any ground of unpatentability alleged is such that it would also apply to the applicant; for example, if the applicant alleges that the claims of the patent are statutorily barred by a reference which would also be a bar to the applicant. If the examiner finds that an alleged ground of unpatentability would also apply to the applicant, the interference

—If a word processing program is used to generate a "Sequence Listing," hard page break controls should not be used and margins should be adjusted to the smallest setting.

—Word processing files should not be submitted to the Office; the Sequence Listing generated by a word processing file should be saved as an ASCII text file for submission. Most word processing programs provide this feature.

—Statements in accordance with 37 CFR 1.821(f), (g), (h) and 37 CFR 1.825 and proper labeling in accordance with 37 CFR 1.824(a)(6) should be noted. Sample statements to support filings and submissions in accordance with 37 CFR 1.821 through 1.825 are provided in MPEP § 2428 Sample Statements.

—Use Box SEQUENCE.

—Three and a half inch disks are less fragile than five and a quarter inch disks.

—On nucleotide sequences, since only single strands may be depicted in the "Sequence Listing," show strands in 5′ to 3′ direction.

—The single stranded nucleotide depicted in the "Sequence Listing" may represent a strand of a nucleotide sequence that may be single or double stranded which may be, further, linear or circular. An amino acid sequence or peptide may be linear or circular. In some instances, a sequence may be both single stranded and double stranded and/or both linear and circular. The response "not relevant" is also an acceptable response for both "Strandedness" and "Topology."

—Numeric identifiers "<140>, Current Application Number," "<141>, Current Filing Date," "<150>, Prior Application Number," and "<151>, Prior Application Filing Date," should appear in the "Sequence Listing" in all cases. If the information about the current application is not known or is unavailable at the time of completing the Sequence Listing, then the lines following numeric identifiers <140> and <141> should be left blank. This would normally be the case when the "Sequence Listing" is included in a newly filed application. Similarly, if information regarding prior applications is inapplicable, or not known at the time of completing the "Sequence Listing" but will be later filed, then the numeric identifiers <150> and <151> should appear with the line following the numeric identifiers left blank.

—If you receive a Notice to Comply that should not have been sent to you, send a letter in the form of a request for reconsideration of the notice to the organization sending the notice.

—There are a limited number of mandatory items of information. They are identified in MPEP § 2424.02 Sequence Listing Numeric Identifiers.

—Figures can be used to convey information not readily conveyed by the Sequence Listing. The exclusive conformance requirement of 37 CFR 1.821(b) will be relaxed for drawing figures. However, the sequence information so conveyed must still be included in a "Sequence Listing" and the sequence identifier ("SEQ ID NO:X") must be used, either in the drawing or in the "Brief Description of the Drawings."

—Extra copies of computer readable forms should not be sent to examiners.

—Inosine may be represented by the use of "I" in the features section, otherwise use "n."

—Stop codons, represented by an asterisk, are not permitted in amino acid sequences.

—Punctuation should not be used in a sequence to indicate unknown nucleotide bases or amino acid residues nor should punctuation be used to delimit active or functional regions of a sequence. These regions should be noted as Features of the sequence per 37 CFR 1.823(b) (see numeric identifiers <220> - <223>.

—The presence of an unnatural amino acid in a sequence does not have the same effect as the presence of a D-amino acid. The sequence may still be subject to the rules even though one or more of the amino acids is not naturally occurring.

—Cyclic and branched peptides are causing some confusion in the application of the rules. Specific questions should be directed to Group 1650 personnel.

—A cyclic peptide with a tail is regarded as a branched sequence, and thereby exempt from the rules, if all bonds adjacent to the amino acid from which the tail emanates are normal peptide bonds.

—Sequences that have variable-length regions depicted as, for example, Ala Ala Leu Leu $(\text{Xaa Xaa})_n$ Ile Pro where n=0-234 or $\text{agccttgggaca}(\text{nnnnn})_m\text{gtcatt}$ where m=0-354 or Ser Met Ala Xaa Ser where Xaa could be 1, 2, 3, 4 <u>and/or</u> 5 amino acids must still comply with the Sequence Rules. The method to use

It is anticipated that patentees may make inquiries as to the status of the application after the first notification has been received. Since the Techonology Center (TC) having responsibility for the application will be indicated on the letter and the letter will not contain any information pertaining to that application, it will be necessary for each TC to establish and maintain some type of permanent record. The type of permanent record is left to the discretion of the TC Director. This permanent record must be independent of the application file and the patented file in order to provide adequate information for patentee inquiries relative to nonreceipt of either a second notice or a notice of declaration of interference either before or after either is mailed from the United States Patent and Trademark Office. Additionally, the permanent record must associate the appropriate patent number and the application number. This record could be a separate TC file for 37 CFR 1.607(d) notices sent to patentees having appropriate identification of the patent and application.

In summary, a 37 CFR 1.607(d) notice (Form Paragraph 23.20) is prepared by a person in the TC having jurisdiction over the application attempting to provoke an interference with a patent. The original is placed of record in the patented file, one copy is sent to the patentee, and an entry is made in the permanent TC record for 37 CFR 1.607(d) notices.

If a final decision is made that no interference will be declared, a primary examiner will prepare and sign a 37 CFR 1.607(d) notice (Form Paragraph 23.21). The original of this notice is entered of record in the patented file, one copy is sent to the patentee, and another entry is made in the permanent record for 37 CFR 1.607(d) notices. If an interference is to be instituted, the declaration of interference notice will be sent by an administrative patent judge and no additional form will be sent by the examiner.

Although the permanent record for 37 CFR 1.607(d) notices includes identification both of the patent and application, the patentee cannot and should not be given any information concerning the party or application attempting to provoke an interference unless and until an interference is declared. 35 U.S.C. 122.

2308 Interference Between an Application and a Patent; *Prima Facie* Showing by Applicant

37 CFR 1.608. Interference between an application and a patent; prima facie showing by applicant.

(a) When the effective filing date of an application is three months or less after the effective filing date of a patent, before an interference will be declared, either the applicant or the applicant's attorney or agent of record shall file a statement alleging that there is a basis upon which the applicant is entitled to a judgment relative to the patentee.

(b) When the effective filing date of an application is more than three months after the effective filing date of a patent, the applicant, before an interference will be declared, shall file evidence which may consist of patents or printed publications, other documents, and one or more affidavits which demonstrate that applicant is *prima facie* entitled to a judgment relative to the patentee and an explanation stating with particularity the basis upon which the applicant is *prima facie* entitled to the judgment. Where the basis upon which an applicant is entitled to judgment relative to a patentee is priority of invention, the evidence shall include affidavits by the applicant, if possible, and one or more corroborating witnesses, supported by documentary evidence, if available, each setting out a factual description of acts and circumstances performed or observed by the affiant, which collectively would *prima facie* entitle the applicant to judgment on priority with respect to the effective filing date of the patent. To facilitate preparation of a record (§ 1.653(g)) for final hearing, an applicant should file affidavits on paper which is 21.8 by 27.9 cm. (8 1/2 x 11 inches). The significance of any printed publication or other document which is self-authenticating within the meaning of Rule 902 of the Federal Rules of Evidence or § 1.671(d) and any patent shall be discussed in an affidavit or the explanation. Any printed publication or other document which is not self-authenticating shall be authenticated and discussed with particularity in an affidavit. Upon a showing of good cause, an affidavit may be based on information and belief. If an examiner finds an application to be in condition for declaration of an interference, the examiner will consider the evidence and explanation only to the extent of determining whether a basis upon which the application would be entitled to a judgment relative to the patentee is alleged and, if a basis is alleged, an interference may be declared.

Under 37 CFR 1.608, an applicant seeking to provoke an interference with a patent is required to submit evidence which demonstrates that the applicant is *prima facie* entitled to a judgment relative to the patentee. Evidence must be submitted when the effective filing date of the application is more than 3 months after the effective filing date of the patent. The evidence may relate to patentability and need not be restricted to priority, but if the evidence shows that

PatentIn 2.1 and looks and feels more like other Windows-based programs. Unlike PatentIn 2.1, projects are portable from one computer to another provided PatentIn 3.0 is installed. From a programming viewpoint, the advantages include that the overall lines of code have been reduced to 25 percent of that required by PatentIn 2.1, maintenance of the code is easier since it is written in Visual C++ and it is easier to modify the code.

In March of 2001 PatentIn 3.1 was released. This newest version builds on the success of PatentIn 3.0 and expands its capabilities. One difference is that the capability to import a single sequence from a single file without a header has been added. The definition of variable characters has been enhanced in PatentIn 3.1. If the nucleotide sequence has the variable "n" and the CDS feature is selected, PatentIn 3.1 will calculate the position of the necessary Xaa in the supplemental protein sequence and provide the definition automatically based on the codon in which the "n" appears.

PatentIn version 3.1, and the companion User's Manual, are available on the Office World Wide Web site (www.uspto.gov) for free downloading. Copies of both the program and the user manual may also be purchased from the Office on 3 1/2-inch floppy diskette or compact disc. PatentIn 3.1 operates in a Windows 95/98/NT/2000 environment and has similar space, memory and system requirements as those for PatentIn version 3.0. A minimum of 64 MB of memory is recommended for smaller projects. Otherwise 128 MB is recommended. Even more additional memory may be required for larger sequence listings. The disk space required to install PatentIn 3.0 is 1.6 MB. Additional disk space is required to store project files and sequence listing files.

See MPEP § 1730 for additional information regarding ordering and using PatentIn.

While use of the PatentIn program is not required for compliance with the sequence rules, its use is highly recommended as Office experience has shown that submissions developed with PatentIn are far less likely to include errors than those developed without the program. The many automatic features of the PatentIn program also greatly ease the generation of Sequence Listings when compared to generating them by hand in a word processing environment. This is especially true for Sequence Listings that include many sequences and/or sequences having great lengths.

The Office provides hands-on training in the use of the PatentIn and associated utilities programs. The classes are held in Washington D.C. as demand warrants. In addition, on site training may be arranged at locations outside Washington, D.C. To express interest in such classes, please contact the Search and Information Resources Administration.

2431 Sample Sequence Listing

A sample "Sequence Listing" is included below.

AFTER NOTICE OF ALLOWANCE

When an amendment which includes one or more claims presented to provoke an interference with a patent is received after the Notice of Allowance and the examiner finds one or more of the claims patentable to the applicant and an interference to exist, the examiner should prepare a letter, requesting that the application be withdrawn from issue for the purpose of interference. This letter, which should designate the claims to be involved, together with the file and the proposed amendments, should be sent to the TC Director.

When an amendment which includes one or more claims presented to provoke an interference with a patent is received after Notice of Allowance, and the examiner finds basis for refusing the interference on any ground, the examiner should make an oral report to the supervisory patent examiner of the reasons for refusing the requested interference. Notification to applicant is made on Form PTOL-271 if the entire amendment or a portion of the amendment (including all the presented claims) is refused. Form Paragraph 23.01 should be employed to express the adverse recommendation as to the entry of the presented claims.

¶ 23.01 Entry of Claims Disapproved

Entry of claim **[1]** disapproved because **[2]**. This application will not be withdrawn from issue.

Examiner Note:

In bracket 2, insert brief statement of basic reasons for disapproval. See MPEP § 2307.03.

2307.04 Presentation of Claims for Interference With a Patent Involved in a Reexamination Proceeding

An interference will not be proposed for a patent which is involved in a reexamination proceeding except upon specific authorization from the Office of the Deputy Commissioner for Patent Examination Policy. Claims which would interfere with the patent may be rejected on any applicable ground, including, if appropriate, the prior art cited in the reexamination proceeding. See MPEP § 2307.02. Prosecution of the application should continue as far as possible, but if the application is placed in condition for allowance and still contains claims which interfere with the patent under reexamination, further action on the application should be suspended until the reexamination proceeding is terminated. See MPEP § 2284.

Form paragraph 23.16 may be used to notify applicant that the prosecution of the application is suspended until the reexamination proceeding of the patent with the conflicting claims is terminated.

¶ 23.16 Patent Claims Undergoing Reexamination

This application contains claims which conflict with the claims of U.S. Patent No. **[1]**, now involved in a reexamination proceeding.

Prosecution in this application is SUSPENDED until termination of the reexamination proceeding.

Applicant should inquire as to the status of this application SIX MONTHS from the date of this letter.

Examiner Note:

This paragraph should only be used when the application is otherwise in condition for allowance.

2307.05 Corresponding Patent Claims Not Identified

37 CFR 1.607(c) requires that "[w]hen an applicant presents a claim which corresponds exactly or substantially to a claim of a patent, the applicant shall identify the patent and the number of the patent claim, unless the claim is presented in response to a suggestion by the examiner."

This requirement of 37 CFR 1.607(c) applies to claims presented in an application at the time of filing as well as to claims presented in an amendment to a pending application. If an applicant, attorney, or agent presents a claim corresponding exactly or substantially to a patent claim without complying with 37 CFR 1.607(c), the examiner may be led into making an action different from what would have been made had the examiner been in possession of all the facts. Therefore, failure to comply with 37 CFR 1.607, when presenting a claim corresponding to a patent claim, may result in the issuance of a requirement for information as to why an identification of the source of the claim was not made. Also see 37 CFR 10.23(c)(7).

The examiner should require the applicant to supply a full identification of the copied patent claims by using Form Paragraph 23.11.

¶ 23.11 Failure To Identify Source of Patent Claims

Claim **[1]** of this application **[2]** apparently been copied from a U.S. patent without being suggested by the examiner. The patent

```
agc ttg tct ttc aaa tgg cct gga ttt tgt ttg ttt gtt tgtttgctc     403
Ser Leu Ser Phe Lys Trp Pro Gly Phe Cys Leu Phe Val
                10                  15

<210> 2
<211> 18
<212> PRT
<213> Paramecium aurelia

<400> 2

Met Val Ser Met Phe Ser Leu Ser Phe Lys Trp Pro Gly Phe Cys Leu
1               5                   10                  15

Phe Val
```

2434 Examination of Patent Applications Claiming Large Numbers of Nucleotide Sequences

The U.S. Patent and Trademark Office published its policy for the examination of patent applications that claim large numbers of nucleotide sequences in the *Official Gazette*, 1192 O.G. 68 (November 19, 1996). Nucleotide sequences encoding different proteins are structurally distinct chemical compounds and are unrelated to one another. These sequences are thus deemed to normally constitute independent and distinct inventions within the meaning of 35 U.S.C. 121. Absent evidence to the contrary, each such nucleotide sequence is presumed to represent an independent and distinct invention, subject to a restriction requirement pursuant to 35 U.S.C. 121 and 37 CFR 1.141. In establishing the new policy, the Commissioner has partially waived the requirements of 37 CFR 1.141 and will permit a reasonable number of such nucleotide sequences to be claimed in a single application. Under this policy, in most cases, up to 10 independent and distinct nucleotide sequences will be examined in a single application without restriction.Those sequences which are patentably indistinct from the sequences selected by the applicant will also be examined. Nucleotide sequences encoding the same protein are not considered to be independent and distinct and will continue to be examined together. In some exceptional cases, the complex nature of the claimed material may necessitate that the reasonable number of sequences to be selected be less than 10. In other cases, applicants may petition pursuant to 37 CFR 1.181 for examination of additional nucleotide sequences by providing evidence that the different nucleotide sequences do not cover independent and distinct inventions. For examples of typical nucleotide sequence claims and additional information on the search and examination procedures, see the above cited O.G. Notice. See also MPEP § 803.04.

2435 Publishing of Patents and Patent Application Publications with Lengthy Sequence Listings

Due to the high cost and limited usefulness of the printed paper or composed electronic image versions of nucleotide and/or amino acid sequences, if the "Sequence Listing" portion is lengthy (i.e., at least 600 Kb (about 300 typed pages)), it will no longer be printed with the paper and composed electronic image (page image) versions of patents and patent application publications. The "Sequence Listing" will only be published in electronic form and will be available on the USPTO sequence homepage (http://seqdata.uspto.gov) as an ASCII text file.

Neither the paper copies of patents and patent application publications that are in the search rooms nor those sold through the Office of Public Records, Certification Division, will include a sequence listing if the sequence listing is not included in the composed

Applicant has failed to specifically apply each limitation or element of each of the copied claim(s) to the disclosure of the application.

Applicant is given ONE MONTH or THIRTY DAYS, whichever is longer, to specifically apply each limitation or element of each of the copied claim(s) to the disclosure of the application. THE PROVISIONS OF 37 CFR 1.136 DO **NOT** APPLY TO THE TIME SPECIFIED IN THIS ACTION.

2307.01 Presentation of Claims Corresponding to Patent Claims Not a Reply to Last Office Action

The presentation of claims corresponding to claims of a patent when not suggested by the Office does not constitute a reply to the last Office action unless the last Office action relied solely on the patent for the rejection of all the claims rejected in that action.

2307.02 Rejection of Claims Corresponding to Patent Claims

When claims corresponding to claims of a patent are presented, the application is taken up at once and the examiner must determine whether the presented claims are unpatentable to the applicant on any ground(s), e.g., under 35 U.S.C. 102, 35 U.S.C. 103, 35 U.S.C. 112, 35 U.S.C. 135(b), double patenting, etc. If at least one of the presented claims is not rejectable on any such ground and is claiming the same invention as at least one claim of the patent, the examiner should proceed to propose an interference.

If all of the claims presented are rejectable on any grounds, they should be so rejected. The ground of rejection of the claims presented may or may not be one which would also be applicable to the corresponding claims in the patent. If the ground of rejection is also applicable to the corresponding claims in the patent, any letter including the rejection must have the approval of the TC Director. See MPEP § 1003. Examples of grounds of rejection which would not also be applicable to the patent are double patenting, insufficient disclosure in the application, a reference whose date is junior to that of the patent, or a bar under 35 U.S.C. 135(b) (see MPEP § 2307).

The examiner should not proceed to propose an interference where the examiner is aware of a reference or other ground of unpatentability for the application claims which correspond to the patent claims, even if the ground of unpatentability would also be applicable to the patent claims. Although an applicant may wish to have his or her application placed in interference with a patent in order to raise a ground of unpatentability against the patent claims, an interference will not be proposed unless at least one of the claims in the application corresponding to the claims of the patent is allowable.

If the patent has a filing date earlier than the application effective filing date, see MPEP § 2308.01.

37 CFR 1.607(b) requires that "[w]hen an applicant seeks an interference with a patent, examination of the application, including any appeal to the Board, shall be conducted with special dispatch within the Patent and Trademark Office." Therefore, when all the claims presented are rejected the examiner sets a time limit for reply, not less than 30 days, and all subsequent actions, including action of the Board on appeal, are special. Failure by the applicant to reply or appeal within the time limit, will, in the absence of a satisfactory showing, be deemed a disclaimer of the invention claimed.

While the time limit for an appeal from the final rejection of a claim corresponding to a patent claim is usually set under the provisions of 37 CFR 1.607(b), where the remainder of the application is ready for final action, it may be advisable to set a shortened statutory period for the entire application in accordance with 37 CFR 1.134.

There is an important distinction between a limited time for reply under 37 CFR 1.607(b) and a shortened statutory period under 37 CFR 1.134. The penalty resulting from failure to reply within the time limit under 37 CFR 1.607(b) is loss of the claim or claims involved, on the doctrine of disclaimer, and this is appealable; while failure to reply within the set statutory period (37 CFR 1.134) results in abandonment of the entire application. This is not appealable.

The rejection of claims presented for interference with a patent sometimes creates a situation where two different periods for reply are running against the application - one, the statutory period dating from the last full action on the application; the other, the limited period set for the reply to the rejection (either first or final) of the presented claims. This situation should be avoided where possible, for example, by setting a shortened period for the entire application, but where

Chapter 2500 Maintenance Fees

2501 Introduction
2501 Introduction
2504 Patents Subject to Maintenance Fees
2506 Times for Submitting Maintenance Fee Payments
2510 Submission of Maintenance Fee Documents
2515 Information Required for Submission of Maintenance Fee Payment
2520 Maintenance Fee Amounts
2522 Methods of Payment
2530 Informalities
2540 Fee Address for Maintenance Fee Purposes
2542 Change of Correspondence Address
2550 Small Entity Status
2560 Revocation of Power of Attorney and Withdrawal of Attorney
2570 Status Requests
2575 Notices
2580 Review of Decision Refusing to Accept and Record Payment of a Maintenance Fee Filed Prior to Expiration of Patent
2590 Acceptance of Delayed Payment of Maintenance Fee in Expired Patent to Reinstate Patent
2591 Intervening Rights in Reinstated Patents

2501 Introduction

35 U.S.C. 41. Patent fees; patent and trademark search systems.

*****

(b) The Director shall charge the following fees for maintaining in force all patents based on applications filed on or after December 12, 1980:

(1) 3 years and 6 months after grant, $830 [$850].

(2) 7 years and 6 months after grant, $1,900 [$1,950].

(3) 11 years and 6 months after grant, $2,910 [$2,990].

Unless payment of the applicable maintenance fee is received in the Patent and Trademark Office on or before the date the fee is due or within a grace period of six months thereafter, the patent will expire as of the end of such grace period. The Director may require the payment of a surcharge as a condition of accepting within such 6-month grace period the payment of an applicable maintenance fee. No fee may be established for maintaining a design or plant patent in force.

(c)(1)The Director may accept the payment of any maintenance fee required by subsection (b) of this section which is made within twenty-four months after the six-month grace period if the delay is shown to the satisfaction of the Director to have been unintentional, or at any time after the six-month grace period if the delay is shown to the satisfaction of the Director to have been unavoidable. The Director may require the payment of a surcharge as a condition of accepting payment of any maintenance fee after the six-month grace period. If the Director accepts payment of a maintenance fee after the six-month grace period, the patent shall be considered as not having expired at the end of the grace period.

(2) A patent, the term of which has been maintained as a result of the acceptance of a payment of a maintenance fee under this subsection, shall not abridge or affect the right of any person or that person's successors in business who made, purchased, offered to sell, or used anything protected by the patent within the United States, or imported anything protected by the patent into the United States after the 6-month grace period but prior to the acceptance of a maintenance fee under this subsection, to continue the use of, to offer for sale, or to sell to others to be used, offered for sale, or sold, the specific thing so made, purchased, offered for sale, used, or imported. The court before which such matter is in question may provide for the continued manufacture, use, offer for sale, or sale of the thing made, purchased, offered for sale, or used within the United States, or imported into the United States, as specified, or for the manufacture, use, offer for sale, or sale in the United States of which substantial preparation was made after the 6-month grace period but before the acceptance of a maintenance fee under this subsection, and the court may also provide for the continued practice of any process that is practiced, or for the practice of which substantial preparation was made, after the 6-month grace period but before the acceptance of a maintenance fee under this subsection, to the extent and under such terms as the court deems equitable for the protection of investments made or business commenced after the 6-month grace period but before the acceptance of a maintenance fee under this subsection.

*****

Note: The fees in brackets in 35 U.S.C. 41(b) as reproduced above are the fees that went into effect on October 1, 2000. See 37 CFR 1.20(e)-(g) for the current fee amounts.

Public Law 96-517, enacted December 12, 1980, established the requirement to pay maintenance fees for applications filed on or after that date. The statutory provisions regarding maintenance fees have been subsequently modified by Public Law 97-247, enacted August 27, 1982; Public Law 98-622, enacted November 8, 1984; Public Law 102-204, enacted December 10, 1991; Public Law 102-444, enacted October 23, 1992; Public Law 105-358, enacted November 10, 1998; and Public Law 106-113, enacted November 29, 1999.

STATUS AND ENTITY DIVISION

The Status and Entity Division provides specialized advice and guidance to the public on maintenance fee matters.

The Status and Entity Division determines the proper status of issued patents which are subject to

tion. In order to avoid the issuance of two patents to the same patentable invention, the examiner should take steps to propose an interference between the application and the patent.

If the application contains at least one allowable claim drawn to the same patentable invention as at least one patent claim, the examiner may propose the interference by proceeding as described in MPEP § 2309.

If the application discloses, but does not claim, an invention claimed in the patent, the examiner should suggest a claim or claims to the applicant (see MPEP § 2305), and include a statement that failure of the applicant to make the claim or claims will be taken as a concession that the subject matter of the claim or claims is the prior invention of another. Form Paragraphs 23.09 and 23.10 should be used for this purpose.

¶ 23.09 Requirement To Copy Patent Claim

The following claim number **[1]** from U.S. Patent No. **[2]** is suggested to applicant under 35 U.S.C. 135(a) for the purposes of an interference:

[3]

The suggested claim must be copied exactly, although other claims may be proposed under 37 CFR 1.605(a).

Applicant is given ONE MONTH or THIRTY DAYS, whichever is longer, from the mailing date of this communication to copy this patent claim. Failure to do so will be considered a concession that the subject matter of this claim is the prior invention of another under 35 U.S.C. 102(g), and thus also prior art under 35 U.S.C. 103(a) (*In re Oguie*, 517 F.2d 1382, 186 USPQ 227 (CCPA 1975)), but will **not** result in the abandonment of this application. THE PROVISIONS OF 37 CFR 1.136 DO **NOT** APPLY TO THE TIME SPECIFIED IN THIS ACTION.

Examiner Note:

1. In bracket 1, insert the number from the patent of the suggested claim.
2. In bracket 2, insert the number of the patent.
3. In bracket 3, insert a copy of the patent claim.
4. Only one claim from the patent should be suggested for interference unless other claims to a separate patentably distinct invention are claimed in the patent and can be made by the applicant. To suggest an additional claim, form paragraph 23.10 should follow this paragraph.
5. If the Office action addresses other issues, such as a rejection of other claims, form paragraph 23.07 should be included at the end of the Office action.

¶ 23.10 Copying Additional Patent Claims for a Distinct Invention

Claim number **[1]** from U.S. Patent No. **[2]** is suggested under 35 U.S.C. 135(a) in addition to claim **[3]** of the patent, suggested above. The inventions defined by these patent claims are considered to be "separate patentable inventions" under 37 CFR 1.601(n) which could form the basis for plural counts in an interference.

The suggested claim, reproduced below, must be copied exactly, although other claims may be proposed under 37 CFR 1.605(a).

[4]

Applicant is given ONE MONTH or THIRTY DAYS, whichever is longer, from the mailing date of this communication to copy this additional patent claim. Failure to do so will be considered a concession that the subject matter of this claim is the prior invention of another under 35 U.S.C. 102(g), and thus also prior art under 35 U.S.C. 103(a) (*In re Oguie*, 517 F.2d 1382,186 USPQ 227 (CCPA 1975)). THE PROVISIONS OF 37 CFR 1.136 DO **NOT** APPLY TO THE TIME SPECIFIED IN THIS ACTION.

Examiner Note:

1. In bracket 1, insert the number of the patent claim that is patentably distinct from the claim specified in form paragraph 23.09.
2. This paragraph must follow form paragraph 23.09 and should only be used in those rare instances where both the patent and the application claim distinct, interfering inventions.

2307 Applicant Requests Interference With a Patent

37 CFR 1.607. Request by applicant for interference with patent.

(a) An applicant may seek to have an interference declared between an application and an unexpired patent by,

(1) Identifying the patent,

(2) Presenting a proposed count,

(3) Identifying at least one claim in the patent corresponding to the proposed count,

(4) Presenting at least one claim corresponding to the proposed count or identifying at least one claim already pending in its application that corresponds to the proposed count, and, if any claim of the patent or application identified as corresponding to the proposed count does not correspond exactly to the proposed count, explaining why each such claim corresponds to the proposed count, and

(5) Applying the terms of any application claim,

(i) Identified as corresponding to the count, and

(ii) Not previously in the application to the disclosure of the application.

(6) Explaining how the requirements of 35 U.S.C. 135(b) are met, if the claim presented or identified under paragraph (a)(4) of this section was not present in the application until more than one year after the issue date of the patent.

(b) When an applicant seeks an interference with a patent, examination of the application, including any appeal to the Board, shall be conducted with special dispatch within the Patent and Trademark Office. The examiner shall determine whether there is interfering subject matter claimed in the application and the patent which is patentable to the applicant subject to a judgment in an interference. If the examiner determines that there is any interfering subject matter, an interference will be declared. If the exam-

(A) For an application not claiming benefit of an earlier application, the actual United States filing date of the application.

(B) For an application claiming benefit of an earlier foreign application under 35 U.S.C. 119(a)-(d), the actual United States filing date of the application.

(C) For a continuing (continuation, division, continuation-in-part) application claiming the benefit of a prior patent application under 35 U.S.C. 120, the actual United States filing date of the continuing application.

(D) For a reissue application, including a continuing reissue application claiming the benefit of a reissue application under 35 U.S.C. 120, the United States filing date of the original nonreissue application on which the patent reissued is based.

(E) For an international application that has entered the United States as a Designated Office under 35 U.S.C. 371, the international filing date granted under Article 11(1) of the Patent Cooperation Treaty which is considered to be the United States filing date under 35 U.S.C. 363.

2506 Times for Submitting Maintenance Fee Payments

37 CFR 1.362(d) sets forth the time periods when the maintenance fees for a utility patent can be paid without surcharge. Those periods, referred to generally as the "window period," are the 6-month periods preceding each due date. The "due dates" are defined in 35 U.S.C. 41(b). The window periods are (1) 3 years to 3 1/2 years after the date of issue for the first maintenance fee payment, (2) 7 years to 7 1/2 years after the date of issue for the second maintenance fee payment, and (3) 11 years to 11 1/2 years after the date of issue for the third and final maintenance fee payment. A maintenance fee paid on the last day of a window period can be paid without surcharge. The last day of a window period is the same day of the month the patent was granted 3 years and 6 months, 7 years and 6 months, or 11 years and 6 months after grant of the patent.

37 CFR 1.362(e) sets forth the time periods when the maintenance fees for a utility patent can be paid with surcharge. Those periods, referred to generally as the "grace period," are the 6-month periods immediately following each due date. The grace periods are (1) 3 1/2 years and through the day of the 4th anniversary of the grant of the patent, (2) 7 1/2 years and through the day of the 8th anniversary of the grant of the patent and, (3) 11 1/2 years and through the day of the 12th anniversary of the grant of the patent. A maintenance fee may be paid with the surcharge on the same date (anniversary date) the patent was granted in the 4th, 8th, or 12th year after grant to prevent the patent from expiring.

Maintenance fees for a reissue patent are due based upon the schedule established for the original utility patent. The filing of a request for *ex parte* or *inter partes* reexamination and/or the publication of a reexamination certificate does not alter the schedule of maintenance fee payments of the original patent.

If the day for paying a maintenance fee falls on a Saturday, Sunday, or a Federal holiday within the District of Columbia, the maintenance fee may be paid on the next succeeding day that is not a Saturday, Sunday, or Federal holiday. For example, if the window period for paying a maintenance fee without a surcharge ended on a Saturday, Sunday, or a Federal holiday within the District of Columbia, the maintenance fee can be paid without surcharge on the next succeeding day that is not a Saturday, Sunday, or a Federal holiday within the District of Columbia. Likewise, if the grace period for paying a maintenance fee with a surcharge ended on a Saturday, Sunday, or a Federal holiday within the District of Columbia, the maintenance fee can be paid with surcharge on the next succeeding day that is not a Saturday, Sunday, or a Federal holiday within the District of Columbia. In the latter situation, the failure to pay the maintenance fee and surcharge on the next succeeding day that is not a Saturday, Sunday, or a Federal holiday within the District of Columbia will result in the patent expiring on a date (4, 8, or 12 years after the date of grant) earlier than the last date on which the maintenance fee and surcharge could be paid. This situation results from the provisions of 35 U.S.C. 21, but those provisions do not extend the expiration date of the patent if the maintenance fee and any required surcharge are not paid when required. For example, if the grace period for paying a maintenance fee with a surcharge ended on a Saturday, the maintenance fee and surcharge could be paid on the next succeeding business day, e.g., Monday, but the patent will have expired at midnight on Saturday if the maintenance fee and surcharge were

When the examiner suggests one or more claims for the purpose of interference with an application in issue to an applicant whose application is pending before him or her, the application in issue will not be withdrawn for the purpose of interference unless the suggested claims are presented in the pending application within the time specified by the examiner. The letter suggesting claims should be submitted to the TC Director for approval.

In either of the above cases, the Office of Patent Publication should be notified when the claims are suggested, so that in case the issue fee is paid during the time in which the suggested claims may be presented, proper steps may be taken to prevent the issue fee from being applied.

The examiner should borrow the allowed application from the Office of Patent Publication and hold the file until the claims are presented or the time limit expires. This avoids any possible issuance of the application as a patent should the issue fee be paid. To further ensure against issuance of the application, the examiner may pencil in the blank space labeled, "Date paid" in the lower right-hand corner of the face of the file wrapper, the initialed request: "Defer for interference." The issue fee is not applied to such an application until the following procedure is carried out.

When notified that the issue fee has been received, the examiner shall prepare a memo to the Office of Patent Publication requesting that issue of the patent be deferred for a period of 3-months due to possible interference. This allows a period of 2 months to complete any action needed. At the end of this 2-month period, the application must either be released to the Office of Patent Publication or be withdrawn from issue.

When an application is found claiming an invention for which claims are to be suggested to other applications already involved in interference, to form another interference, the TC Interference Practice Specialist, after obtaining the consent of the administrative patent judge in charge of the interference, borrows the last named applications from the Service Branch of the Board of Patent Appeals and Interferences. In case the application is to be added to an existing interference, the examiner should consult with the Interference Practice Specialist in accordance with MPEP § 2309. The Interference Practice Specialist will consult with the administrative patent judge in charge of the interference who will determine the action to be taken. Also, see MPEP § 2342 and § 2364.01.

Form paragraph 23.08 may be used to withdraw an application from issue for consideration of a potential interference based on suggested claims. Form paragraph 23.19 may be used to notify applicant that the foreign priority claim has not been substantiated yet.

¶ 23.08 Suggestion of Claims - Application in Issue

This application has been withdrawn from issue for consideration of a potential interference based on the claims suggested in this action.

Examiner Note:

1. If a conflicting application is in issue, it should be withdrawn using form paragraph 10.01 prior to suggesting claims for interference.
2. Either form paragraph 23.04 or 23.09 must be used in conjunction with this paragraph.

¶ 23.19 Foreign Priority Not Substantiated

Should applicant desire to obtain the benefit of foreign priority under 35 U.S.C. 119(a)-(d) prior to declaration of an interference, a translation of the foreign application should be submitted under 37 CFR 1.55 in reply to this action.

Examiner Note:

This paragraph may be used when claims are suggested to applicant from either an application or a patent and applicant has a claim for priority, but has not filed a translation of the priority document.

2306 Interference Between an Application and a Patent

37 CFR 1.606. Interference between an application and a patent; subject matter of the interference.

Before an interference is declared between an application and an unexpired patent, an examiner must determine that there is interfering subject matter claimed in the application and the patent which is patentable to the applicant subject to a judgment in the interference. The interfering subject matter will be defined by one or more counts. The application must contain, or be amended to contain, at least one claim that is patentable over the prior art and corresponds to each count. The claim in the application need not be, and most often will not be, identical to a claim in the patent. All claims in the application and patent which define the same patentable invention as a count shall be designated to correspond to the count.

An interference may be declared between an application and a patent if the application and patent are claiming the same patentable invention, as defined in 37 CFR 1.601(n), and at least one of the applicant's claims to that invention are patentable to the appli-